Outdoor Wi-Fi Bullet Camera Quick Guide

Packing List

The package contents may vary with device model and version.

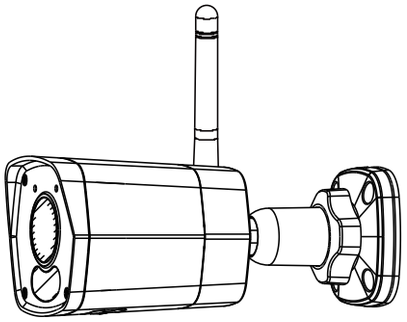

Camera

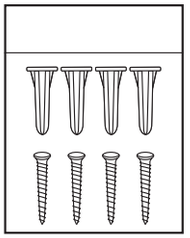

Screw components

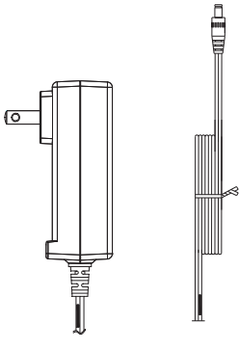

Power adapter

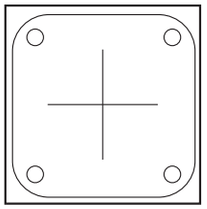

Sticker

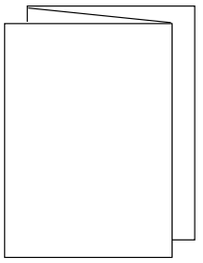

Quick guide

Appearance

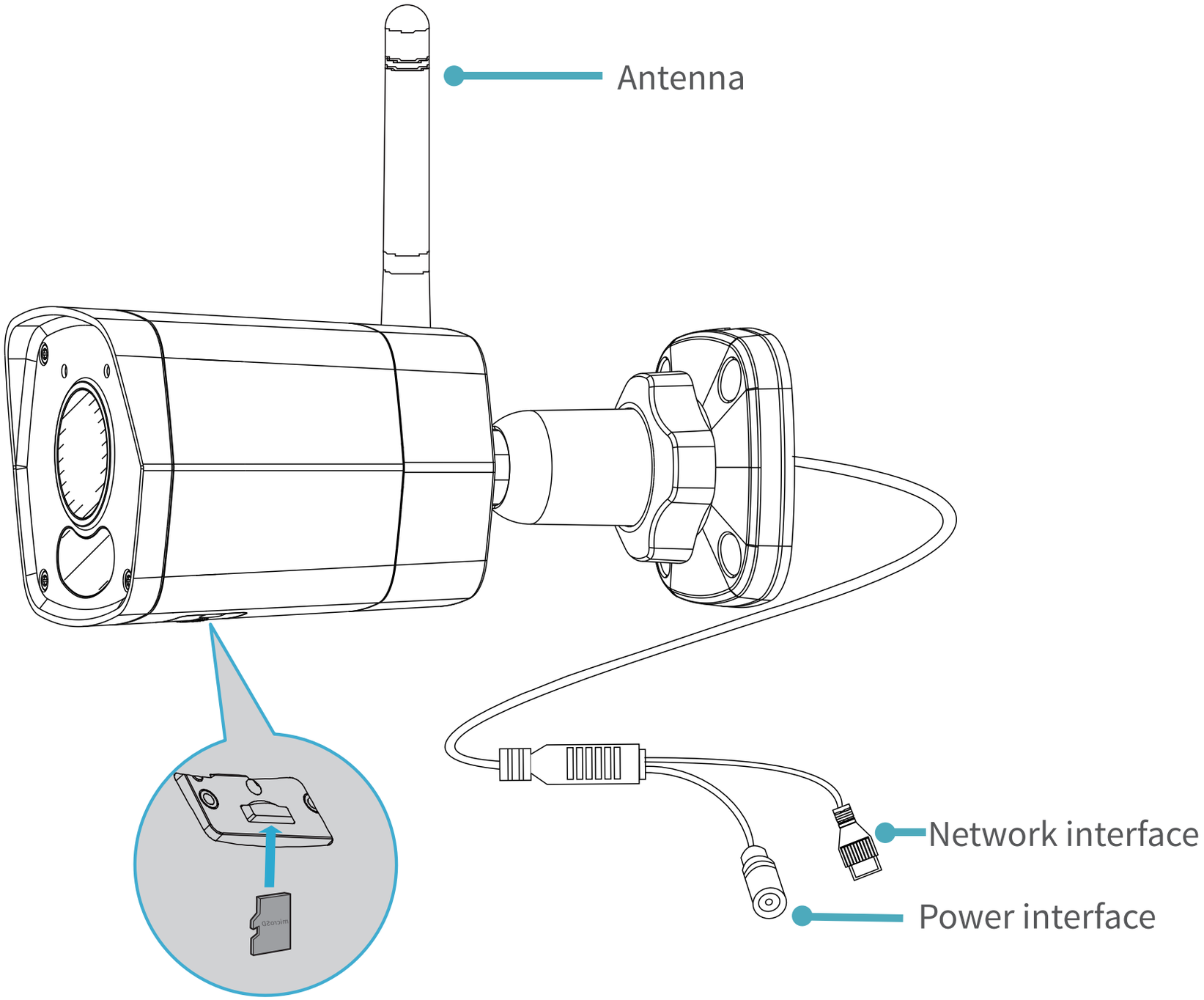

CAUTION Do not insert or remove the Micro SD card while power is connected; it may damage the camera and the SD card.

Operating with Guard Live App

1. Ensure that your router supports a 2.4G Hz Wi-Fi network.

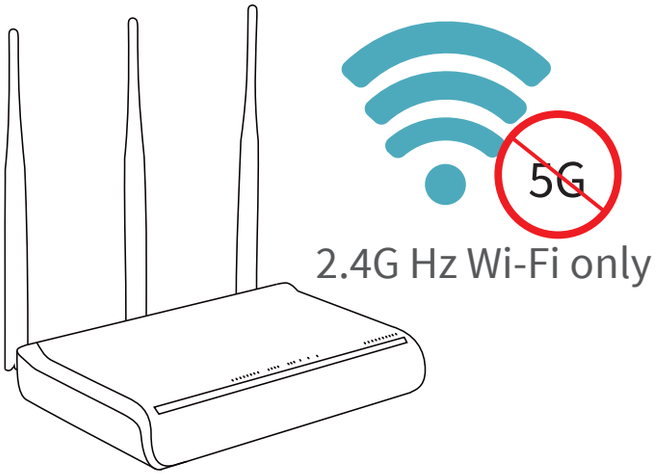

2. Connect the camera to power.

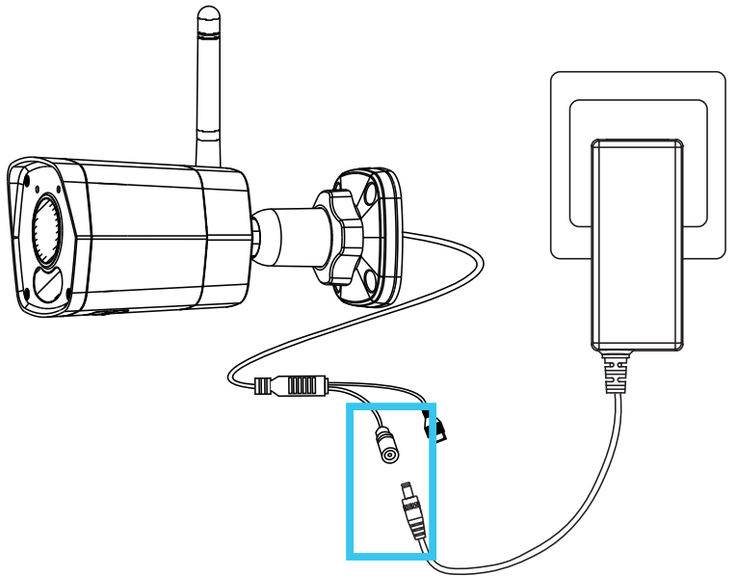

3. Download and install Guard Live.

A: Scan QR code

B: Search in app stores

Download on the App Store

GET IT ON Google Play

4. Add the camera to Guard Live.

Tap+, and follow the on-screen instructions to proceed.

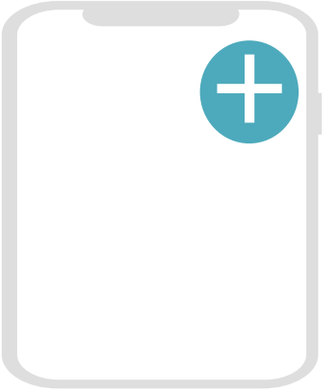

(Optional) Web Login

1. Connect the camera to power and a router.

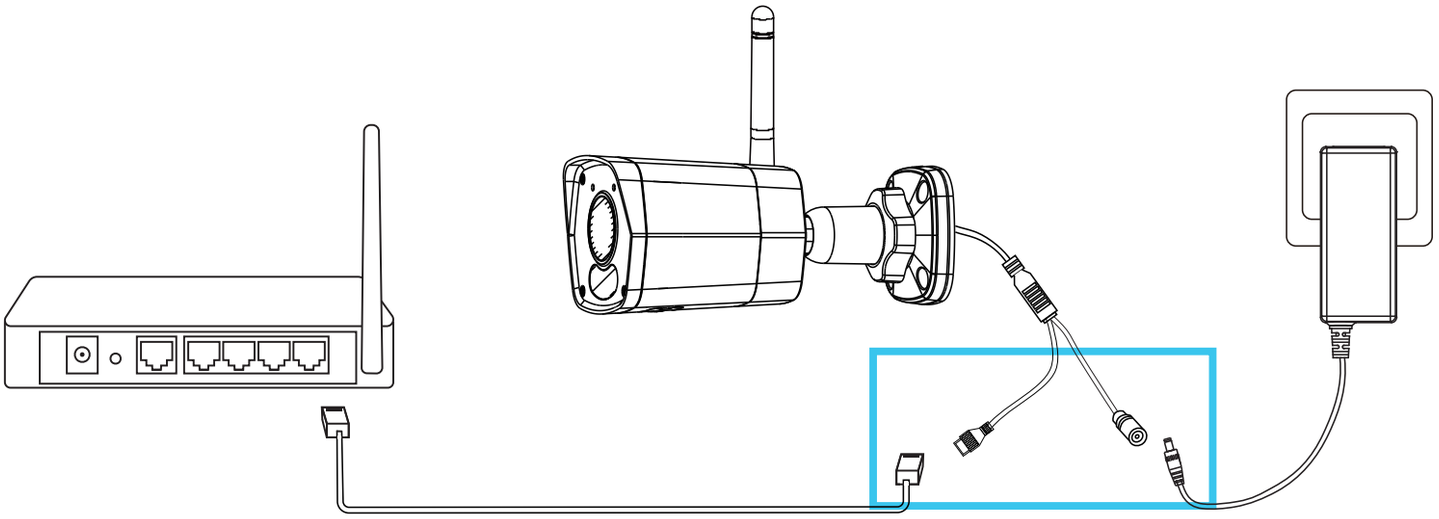

2. Log in to the Web interface.

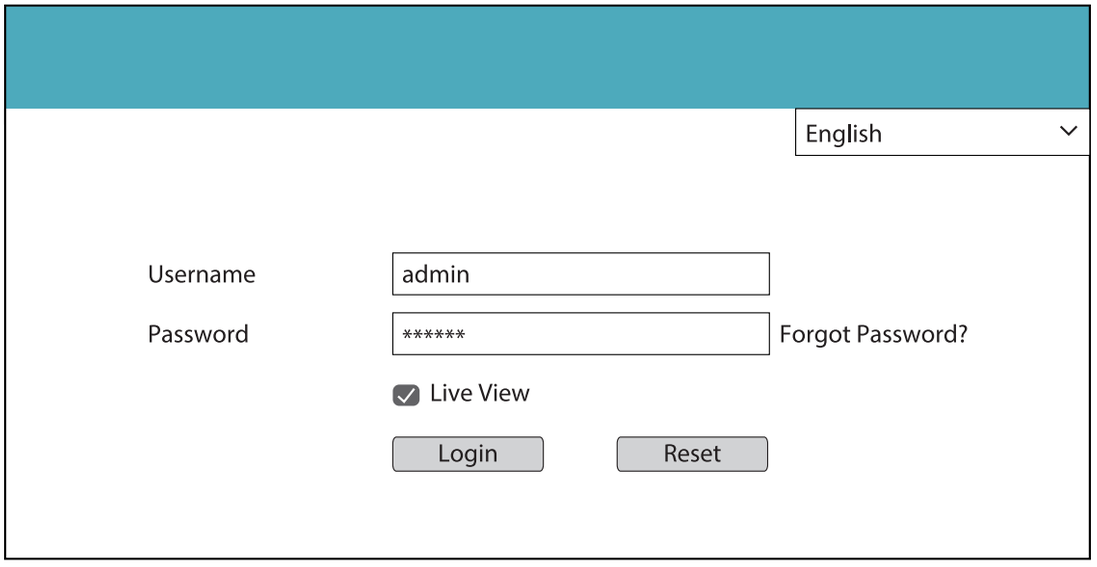

Default
IP: 192.168.1.13
Username: admin
Password: 123456

Installation Environment

Avoid direct sunlight

Avoid lens tampering

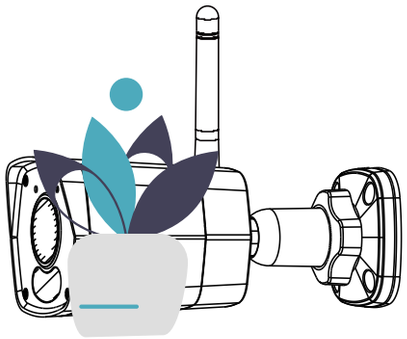

Thick or insulated walls can greatly reduce the Wi-Fi signal strength even if your router is nearby.
Therefore, before installing the camera, ensure that the live video can be played smoothly.

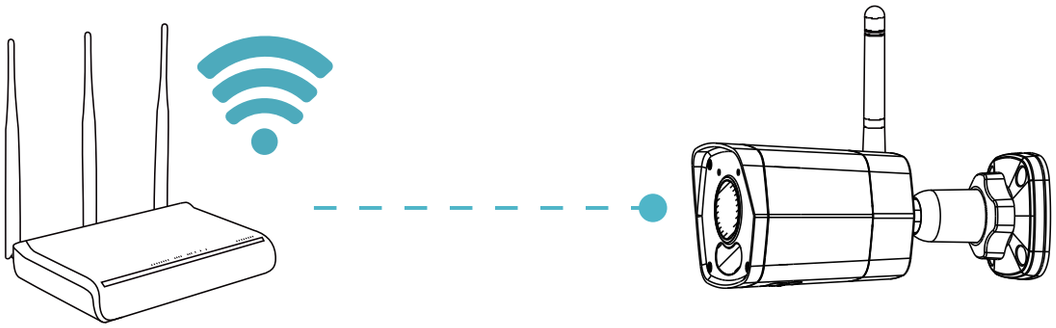

Install the Camera

1. Tools

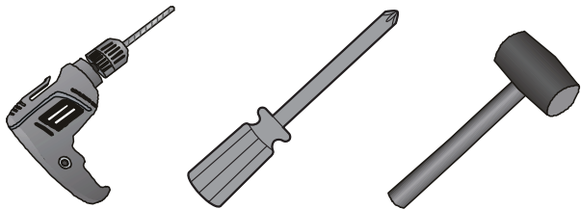

2. Accessories

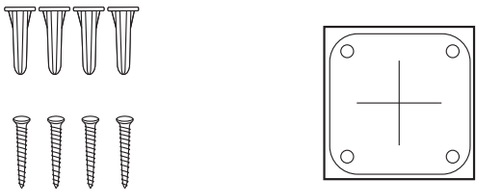

3. Mount the camera.

Take wall mount as an example.

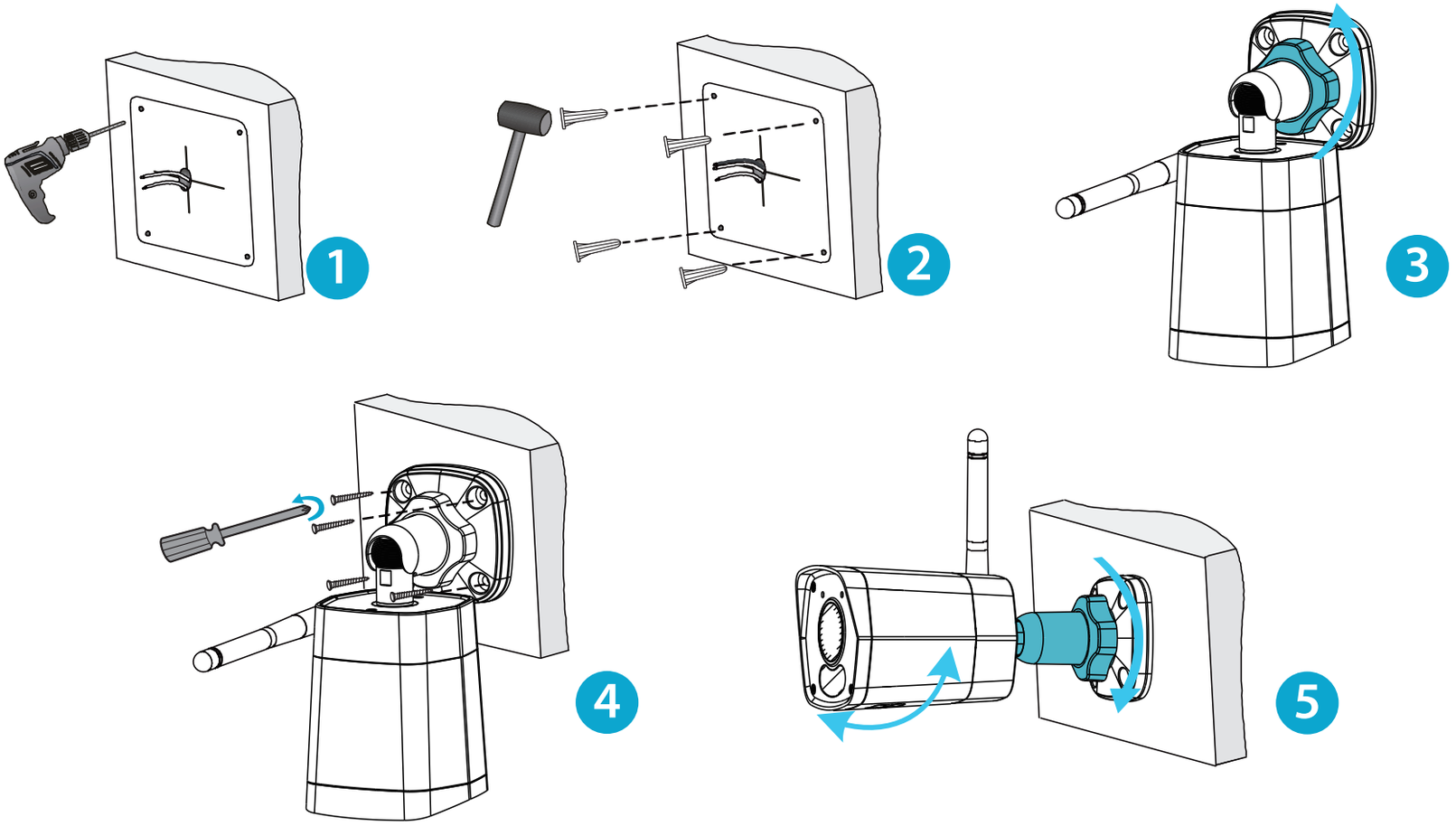

Disclaimer and Safety Warnings

Copyright Statement

No part of this manual may be copied, reproduced, translated or distributed in any form or by any means without prior consent in writing from our company (referred to as us hereafter).

The product described in this manual may contain proprietary software owned by our company and its possible licensors. Unless permitted, no one is allowed to copy, distribute, modify, abstract, decompile, disassemble, decrypt, reverse engineer, rent, transfer, or sublicense the software in any form or by any means.

Export Compliance Statement

Our company complies with applicable export control laws and regulations worldwide, including that of the People's Republic of China and the United States, and abides by relevant regulations relating to the export, re-export and transfer of hardware, software and technology. Regarding the product described in this manual, our company asks you to fully understand and strictly abide by the applicable export laws and regulations worldwide.

Privacy Protection Reminder

Our company complies with appropriate privacy protection laws and is committed to protecting user privacy. You may want to read our full privacy policy at our website and get to know the ways we process your personal information. Please be aware, using the product described in this manual may involve the collection of personal information such as face, fingerprint, license plate number, email, phone number, GPS. Please abide by your local laws and regulations while using the product.

About This Manual

-This manual is intended for multiple product models, and the photos, illustrations, descriptions, etc, in this manual may be different from the actual appearances, functions, features, etc, of the product.

-This manual is intended for multiple software versions, and the illustrations and descriptions in this manual may be different from the actual GUI and functions of the software.

-Despite our best efforts, technical or typographical errors may exist in this manual. Our company cannot be held responsible for any such errors and reserves the right to change the manual without prior notice.

-Users are fully responsible for the damages and losses that arise due to improper operation.

-Our company reserves the right to change any information in this manual without any prior notice or indication. Due to such reasons as product version upgrade or regulatory requirement of relevant regions, this manual will be periodically updated.

Disclaimer of Liability

-To the extent allowed by applicable law, in no event will our company be liable for any special, incidental, indirect, consequential damages, nor for any loss of profits, data, and documents.

-The product described in this manual is provided on an "as is" basis. Unless required by applicable law, this manual is only for informational purpose, and all statements, information, and recommendations in this manual are presented without warranty of any kind, expressed or implied, including, but not limited to, merchantability, satisfaction with quality, fitness for a particular purpose, and noninfringement.

-Users must assume total responsibility and all risks for connecting the product to the Internet, including, but not limited to, network attack, hacking, and virus. We strongly recommend that users take all necessary measures to enhance the protection of network, device, data and personal information. Our company disclaims any liability related thereto but will readily provide necessary security related support.

-To the extent not prohibited by applicable law, in no event will our company and its employees, licensors, subsidiary, affiliates be liable for results arising out of using or inability to use the product or service, including, not limited to, loss of profits and any other commercial damages or losses, loss of data, procurement of substitute goods or services; property damage, personal injury, business interruption, loss of business information, or any special, direct, indirect, incidental, consequential, pecuniary, coverage, exemplary, subsidiary losses, however caused and on any theory of liability, whether in contract, strict liability or tort (including negligence or otherwise) in any way out of the use of the product, even if our company has been advised of the possibility of such damages (other than as may be required by applicable law in cases involving personal injury, incidental or subsidiary damage).

-To the extent allowed by applicable law, in no event shall our total liability to you for all damages for the product described in this manual (other than as may be required by applicable law in cases involving personal injury) exceed the amount of money that you have paid for the product.

Safety Warnings

The device must be installed, serviced and maintained by a trained professional with necessary safety knowledge and skills. Before you start using the device, please read through this guide carefully and make sure all applicable requirements are met to avoid danger and loss of property.

Storage, Transportation, and Use

-Store or use the device in a proper environment that meets environmental requirements, including and not limited to, temperature, humidity, dust, corrosive gases, electromagnetic radiation, etc.

-Make sure the device is securely installed or placed on a flat surface to prevent falling.

-Unless otherwise specified, do not stack devices.

-Ensure good ventilation in the operating environment. Do not cover the vents on the device. Allow adequate space for ventilation.

-Protect the device from liquid of any kind.

-Make sure the power supply provides a stable voltage that meets the power requirements of the device. Make sure the power supply's output power exceeds the total maximum power of all the connected devices.

-Verify that the device is properly installed before connecting it to power.

-Do not remove the seal from the device body without consulting our company first. Do not attempt to service the product yourself. Contact a trained professional for maintenance.

-Always disconnect the device from power before attempting to move the device.

-Take proper waterproof measures in accordance with requirements before using the device outdoors.

Power Requirements

-Install and use the device in strict accordance with your local electrical safety regulations.
-Use a UL certified power supply that meets LPS requirements if an adapter is used.
-Use the recommended cordset (power cord) in accordance with the specified ratings.
-Only use the power adapter supplied with your device.
-Use a mains socket outlet with a protective earthing (grounding) connection.
-Ground your device properly if the device is intended to be grounded.

Battery Use Caution

-When battery is used, avoid:
Extremely high or low temperature and air pressure during use, storage and transportation;
Battery replacement.
-Use the battery properly. Improper use of the battery such as the following may cause risks of fire, explosion or leakage of flammable liquid or gas.
Replace battery with an incorrect type;
Dispose of a battery into fire or a hot oven, or mechanically crushing or cutting of a battery;
-Dispose of the used battery according to your local regulations or the battery manufacturer's instructions.

Avertissement de l’utilisation de la batterie

-Lorsque utiliser la batterie, évitez:
Température et pression d'air extrêmement élevées ou basses pendant l'utilisation, le stockage et le transport.
Remplacement de la batterie.
-Utilisez la batterie correctement. Mauvaise utilisation de la batterie comme celles mentionnées ici, peut entraîner des risques d’incendie, d’explosion ou de fuite liquide de gaz inflammables.
- Remplacer la batterie par un type incorrect;
-Disposer d’une batterie dans le feu ou un four chaud, écraser mécaniquement ou couper la batterie;
-Disposer la batterie utilisée conformément à vos règlements locaux ou aux instructions du fabricant de la batterie.

Regulatory Compliance

FCC Statements

This device complies with Part 15 of the FCC Rules. Operation is subject to the following two conditions: (1) this device may not cause harmful interference, and (2) this device must accept any interference received, including interference that may cause undesired operation.

Caution: The user is cautioned that changes or modifications not expressly approved by the party responsible for compliance could void the user's authority to operate the equipment.

NOTE: This equipment has been tested and found to comply with the limits for a Class B digital device, pursuant to part 15 of the FCC Rules. These limits are designed to provide reasonable protection against harmful interference in a residential installation.

This equipment generates, uses and can radiate radio frequency energy and, if not installed and used in accordance with the instructions, may cause harmful interference to radio communications. However, there is no guarantee that interference will not occur in a particular installation. If this equipment does cause harmful interference to radio or television reception, which can be determined by turning the equipment off and on, the user is encouraged to try to correct the interference by one or more of the following measures:

—Reorient or relocate the receiving antenna.

—Increase the separation between the equipment and receiver.

—Connect the equipment into an outlet on a circuit different from that to which the receiver is connected.

—Consult the dealer or an experienced radio/TV technician for help.

RF Radiation Exposure Statement:

This equipment complies with FCC radiation exposure limits set forth for an uncontrolled environment. This equipment should be installed and operated with a minimum distance of 20cm between the radiator and any part of your body.

LVD/EMC/RE Directive

This product complies with the European Low Voltage Directive 2014/35/EU , EMC Directive 2014/30/EU and RE Directive 2014/53/EU.

WEEE Directive–2012/19/EU

The product this manual refers to is covered by the Waste Electrical & Electronic Equipment (WEEE) Directive and must be disposed of in a responsible manner.

Battery Directive-2013/56/EU

Battery in the product complies with the European Battery Directive 2013/56/EU. For proper recycling, return the battery to your supplier or to a designated collection point.

IC Statement

This device complies with Innovation, Science and Economic Development Canada licence-exempt RSS standard(s). Operation is subject to the following two conditions: (1) this device may not cause interference, and (2) this device must accept any interference, including interference that may cause undesired operation of the device.

Le présent appareil est conforme aux CNR d'Innovation, Sciences et Dé-veloppement économique Canada applicables aux appareils radio exempts de licence. L'exploitation est autorisée aux deux conditions suivantes : (1) l'appareil ne doit pas produire de brouillage, et (2) l'utilisateur de l'appareil doit accepter tout brouillage radioélectrique subi, même si le brouillage est susceptible d'en compromettre le fonctionnement.

This equipment complies with IC RSS-102 radiation exposure limits set forth for an uncontrolled environment. This equipment should be installed and operated with minimum distance 20cm between the radiator & your body.

Cet équipement est conforme aux limitedevraits d'exposition aux rayonnements CNR-102 établies pour un environnement non contrôlé.

Cet équipement doit être installé et utilisé avec une distance minimale de 20 cm entre le radiateur et votre corps.

Network Security

Please take all necessary measures to enhance network security for your device.

The following are necessary measures for the network security of your device:

-Change default password and set strong password: You are strongly recommended to change the default password after your first login and set a strong password of at least nine characters including all three elements: digits, letters and special characters.

-Keep firmware up to date: It is recommended that your device is always upgraded to the latest version for the latest functions and better security. Visit our official website or contact your local dealer for the latest firmware.

The following are recommendations for enhancing network security of your device:

-Change password regularly: Change your device password on a regular basis and keep the password safe. Make sure only the authorized user can log in to the device.

-Enable HTTPS/SSL: Use SSL certificate to encrypt HTTP communications and ensure data security.

-Enable IP address filtering: Allow access only from the specified IP addresses.

-Minimum port mapping: Configure your router or firewall to open a minimum set of ports to the WAN and keep only the necessary port mappings. Never set the device as the DMZ host or configure a full cone NAT.

-Disable the automatic login and save password features: If multiple users have access to your computer, it is recommended that you disable these features to prevent unauthorized access.

-Choose username and password discretely: Avoid using the username and password of your social media, bank, email account, etc, as the username and password of your device, in case your social media, bank and email account information is leaked.

-Restrict user permissions: If more than one user needs access to your system, make sure each user is granted only the necessary permissions.

-Disable UPnP: When UPnP is enabled, the router will automatically map internal ports, and the system will automatically forward port data, which results in the risks of data leakage. Therefore, it is recommended to disable UPnP if HTTP and TCP port mapping have been enabled manually on your router.

-SNMP: Disable SNMP if you do not use it. If you do use it, then SNMPv3 is recommended.

-Multicast: Multicast is intended to transmit video to multiple devices. If you do not use this function, it is recommended you disable multicast on your network.

-Check logs: Check your device logs regularly to detect unauthorized access or abnormal operations.

-Physical protection: Keep the device in a locked room or cabinet to prevent unauthorized physical access.

-Isolate video surveillance network: Isolating your video surveillance network with other service networks helps prevent unauthorized access to devices in your security system from other service networks.