User manual
HYPRO WATER

This product may be covered by one or more of the following U.S. patents: US10,377,644 B2.

EN | 09.2020

Document information

Safety information

⚠ WARNING!

Information with the word WARNING warns of a dangerous situation that can lead to death or serious injuries.

⚠ CAUTION!

Information with the word CAUTION warns of a situation that can lead to minor or moderate injuries.

⚠ ATTENTION!

Information with the word ATTENTION warns of a situation that can lead to damage to property or the environment.

Table of contents

1. Safety information 4
1.1 Intended use 4
1.2 Users 4
1.3 General safety information 5

2. Product information. 7
2.1 Functional principle 7
2.2 Product overview 7
2.3 Scope of supply 9
2.4 Technical data 10
2.5 HYPRO app 10

3. Assembly 11
3.1 Requirements applicable to the installation site 11
3.2 Unpacking the device 12
3.3 Preparing for assembly 12
3.4 Performing assembly 13
3.5 Completing assembly 20

4. Use 23

5. Cleaning 24

6. Maintenance. 25
6.1 Changing the filter 25
6.2 Checks 26

7. Trouble-shooting 27

8. Disassembly 29

9. Disposal. 30
9.1 Disposing of the packaging . . . 30
9.2 Disposing of used filters. 30
9.3 Disposing of the device 30

10. Annex 31
10.1 Contact details for customer service. 31
10.2 Data protection 31
10.3 NSF/ANSI 31
10.4 FCC/ISED Notes. 32
10.5 List of replacement parts 34
10.6 CE declaration of conformity . . 35
10.7 NSF performance data 36

1. Safety information

1.1 Intended use

The device is used for filtering and disinfecting drinking water.

The device is suitable for private or minor commercial use.

Assembly can take place in combination with a 3-way water tap or an additional water tap.

The device is only intended for use with cold water.
➡ "2.4 Technical data" (page 10).

The flowing water must originate from a public supply. Rainwater cisterns, ponds, etc. are not suitable.

The device is not suitable for continuous operation.

Use of the device is only permitted:
- After reading and observing this user manual.
- In technically faultless, unmodified condition.
- When using new original accessories.
- After correct assembly and checking.
- In enclosed spaces.

All other uses are deemed non-intended use.

1.2 Users

Requirements applicable to users:
- Knowledge of this user manual.
- Experience of using mechanical tools.

Special requirements apply to the following users:
- Children from 8 years.
- Persons with limited physical, sensory or mental capabilities.
- Persons with a lack of experience and knowledge.

These users may only use the device as described in the chapter "Use".
➡ "4. Use" (page 23).
Special requirements:
- Users are supervised.
- Users have received instructions on safe use of the device.
- Users understand the dangers associated with use of the device.
- Children must not play with the device.
- Children must not perform cleaning and maintenance without supervision.

1.3 General safety information

⚠ WARNING!

Danger due to a disregard of the user manual!
This user manual contains important information for safe handling of the device. Possible dangers are noted separately. Failure to observe the information can lead to injuries.

- Read the user manual through carefully.
- Store the user manual in an accessible location.
- Observe the safety information in this user manual.

- Store the film and other parts of the packaging out of the reach of children.
- Make sure that assembly complies with the local regulations and provisions.

The device is operated with electricity. There is therefore a fundamental risk of an electric shock.

- Make sure that the electrical connection is secured with a ground fault circuit interrupter (max. 30 mA).
- Never submerge the device in water or other liquids.
- Never take hold of the mains plug with wet hands.
- Always hold the mains plug by the hand grip intended.
- Do not pull on the mains cable.
- Do not transport the device by the mains cable.
- Do not bend the cable.
- Do not pinch the cable.
- Make sure that the cable does not come into contact with heat.
- Make sure that the cable does not come into contact with sharp edges.
- Make sure that the cable does not constitute a tripping hazard.

The device internally generates UV radiation, which can cause damage if it comes into direct contact with the eyes or skin.

- Never open the housing.
- You must not look into the UV LEDs. Only check the function of the UV LEDs indirectly via the status LEDs on the device and the HYPRO app.

The device's components (such as UV LEDs or batteries) must be replaced only by the manufacturer.

Used hoses must not be reused.

Spent adsorption media will not be regenerated and used.

In the following instances, use of the device is prohibited:
- If the device or individual components are damaged.
- In case of unauthorised modifications or changes to the device.
- In case of device malfunctions.

The manufacturer shall accept no liability for damages in the following cases:
- With a failure to observe this user manual.
- With non-intended use.
- With incorrect handling.
- When using third-party accessories.

Made in Germany.
System and installation comply with state and local laws and regulations.

2. Product information

2.1 Functional principle

The device filters and disinfects tap water. An active carbon filter removes harmful substances. The UV light from the UV LEDs destroys pathogens. The drinking water is taken off:

- Via the third setting with the use of a 3-way water tap.
- Via the additional water tap.

The device disinfects itself regularly by switching on the UV LEDs briefly.

The device cleans the water of:

- Bacteria, viruses and parasites
- Drug residues and hormones
- Pesticides and herbicides
- Heavy metals
- Chlorine, chloramine and trihalomethanes
- Microplastics
- Volatile organic compounds
- Per- and polyfluoroalkyl substances (e.g. PFOA and PFOS)
- Odorants and flavourings

"Dynamic Twist Technology"

With the HYPRO WATER "Dynamic Twist Technology", the UV light has a flow-optimised effect on the tap water. The water is optimally disinfected in this way.

2.2 Product overview

2.2 / 1

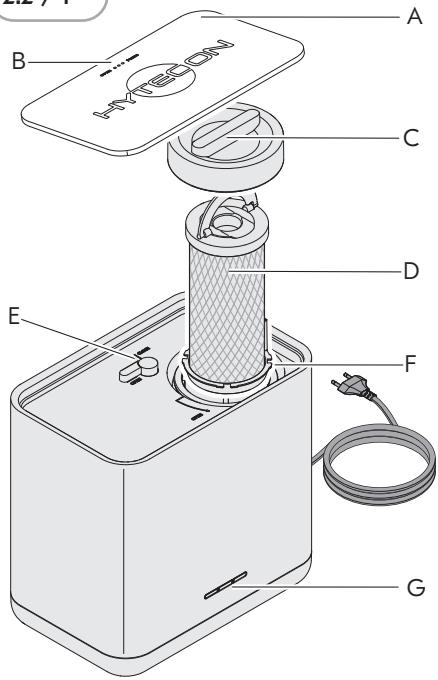

A Device cover
B Pressure point on the device cover
C Screw cap for the filter chamber
D Filter
E Shut-off valve
F Filter chamber in the device
G LED display

2.2 / 2

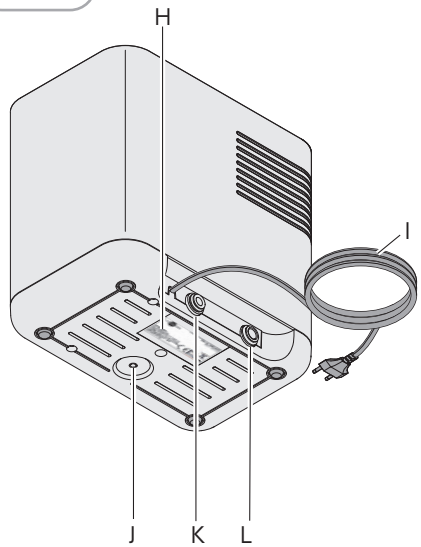

H Type plate
I Mains cable with plug
J Thread for mounting on the wall bracket
K Water inlet
L Water outlet

2.2 / 3

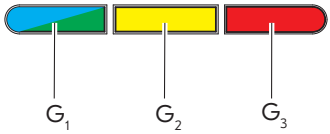

The LED display signals the operating statuses of the device to the user.

G_1	LED lights up green: The device is ready.
G_1	LED lights up blue: The device is disinfecting.
G_2	The LED flashes yellow: The device is ready for WLAN connection.
G_2	LED lights up yellow continuously: The device is connected with the WLAN.
G_3	LED lights up or flashes red: Fault or filter change.

2.3 Scope of supply

2.3 / 1

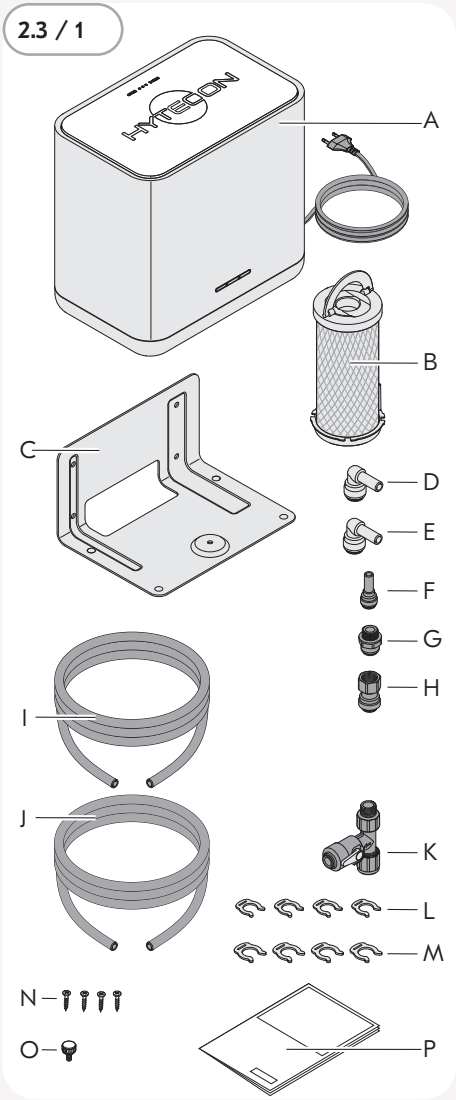

A HYPRO WATER device
B Filter
C Wall bracket
D Angled piece (5/16")
E Angled piece (3/8")
F Reducer piece
G Connection piece (water tap 5/16")
H Connection piece (water tap 3/8")
I Water inlet hose (5/16")
J Water outlet hose (3/8")
K T-piece including shut-off valve
L 4 safety clips (5/16")
M 4 safety clips (3/8")
N 4 screws for mounting on chipboard
O Knurled screw
P User manual

2.4 Technical data

Connection voltage	110 - 240 VAC/ 41 W/ 50 - 60 Hz
Water throughput*	≤ 3 l/min
Water temperature	min. 5 °C/ max. 30 °C
Ambient temperature	min. 5 °C/ max. 35 °C
Operating pressure	min. 2 bar/200 kPa max. 4 bar/400 kPa
Protection class	IP x1
Width	249.5 mm
Depth	161 mm
Height	209.3 mm
Net weight	4.6 kg
Weight with water	5.5 kg
Filter capacity	2000 l
Filter change	4 months
WLAN	WLAN 802.11 b/g/n

* Varies depending on the type of filter used.

2.5 HYPRO app

It is necessary to download the HYPRO app from an AppStore to connect the device with a smartphone or tablet.
System requirements:
- Smartphone or tablet (Android version 5.0 or higher).
- Smartphone or tablet (iOS version 8.0 or higher).

Android iOS

You can find the app in the respective AppStore under the name "HYPRO".

The following information can be viewed using the app:
- Water consumption
- Device status
- Filter status
- Error messages

3. Assembly

3.1 Requirements applicable to the installation site

- The installation site must be clean and dry.
- A suitable socket must be available at the installation site. The socket must be set up by a qualified electrician. The power connections must comply with the local regulations. The mains power supply must concur with the voltage specifications on the type plate.
  ➡ "2.4 Technical data" (page 10).
- For assembly above the worktop, a suitable cut-out must be available in or behind the worktop through which the mains cable and hoses are fed.
- If the wall bracket is used: Select the installation site such that 10 cm remain clear below the device to enable mounting on the wall bracket.
- Select the installation site such that 20 cm remain clear above the device to enable the filter change.
- If the device is used with the HYPRO app: A WLAN connection to the internet must be available at the installation site.
- A 3-way water tap or an additional water tap must be installed at the installation site.

Examples:

3.1 / 1

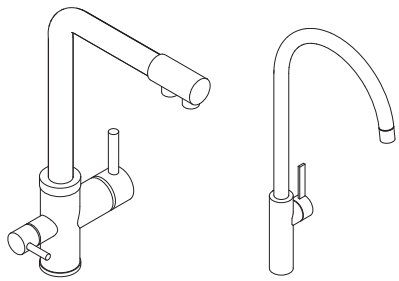

- Observe the documentation for your water tap.

Documentation for the water tap.

3.2 Unpacking the device

⚠ ATTENTION!

Danger of damage due to incorrect handling!
The device and its surfaces may be damaged during unpacking or transport.
- Do not cut into the protective cardboard box.
- Keep objects that may scratch the device away from it.

- Unpack the device and all enclosed parts carefully.
- Check the device and all enclosed parts for damage.
- Check that the scope of supply is complete.
  ➡ "2.3 Scope of supply" (page 9).

If parts are missing or damaged:
- Contact your customer service centre.
  ➡ "10.1 Contact details for customer service" (page 31).

- Remove the packaging material.
  ➡ "9.1 Disposing of the packaging" (page 30).

As a result of the manufacturer's quality inspection, the device may contain residual moisture, which may escape. This residual moisture does not reduce quality or functionality.

3.3 Preparing for assembly

- Before assembly, make sure that the power supply is and remains interrupted at all poles.

- Familiarise yourself with the assembly situation and the associated documents.
  – User manual.
  – Accessories and their instructions.

- Use only original accessories.

The scope of supply includes two connection pieces for the water tap.
- Choose the correct connection piece for your water tap.

🗐 Documentation for the water tap.

- Install the HYPRO app.

3.3 / 1

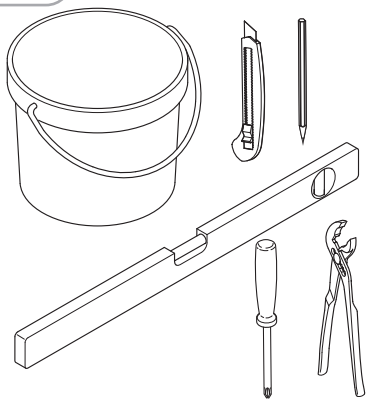

- Assemble all of the required tools and materials:
  - Bucket
  - Cutter knife
  - Pen
  - Spirit level
  - Screwdriver
  - Pipe wrench

3.4 Performing assembly

This user manual contains an example illustration of the device:
- With connection to a 3-way water tap.
- With assembly beneath the worktop.

3.4 / 1

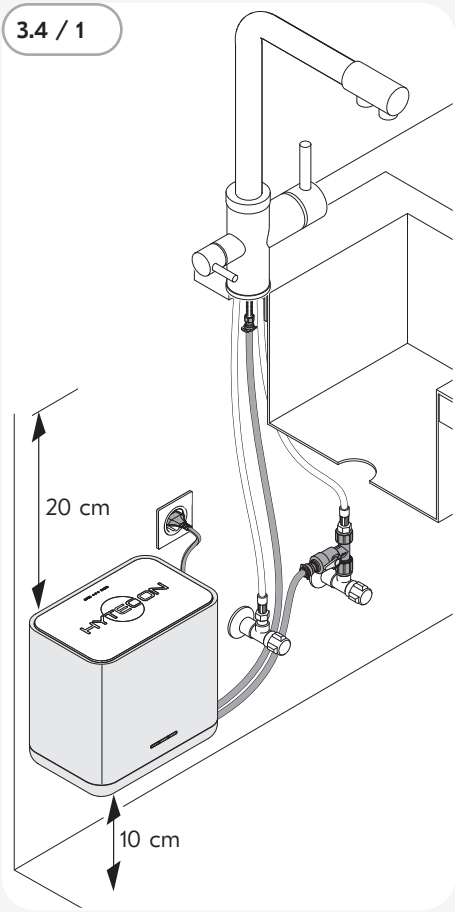

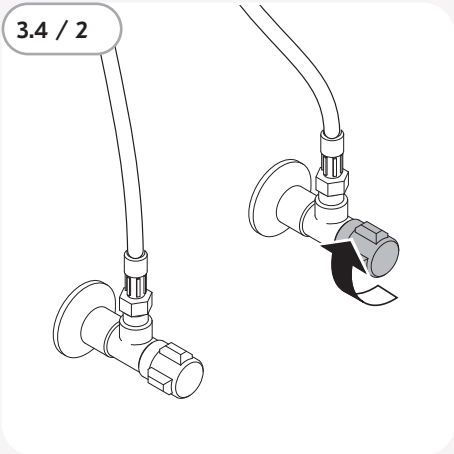

- Shut off the angle valve on the cold water line.

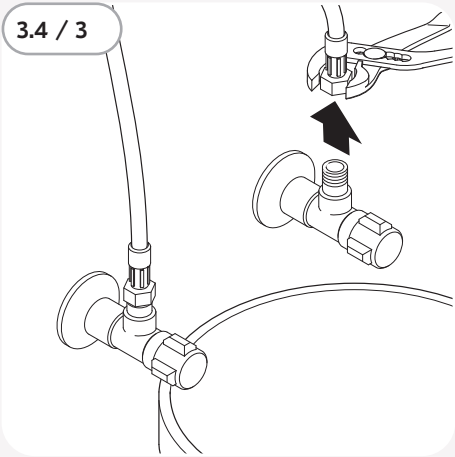

- Position a bucket beneath the angle valve on the cold water line.
- Unscrew the cold water connection to the water tap from the angle valve.

⚠ ATTENTION!

Danger of damage due to incorrect handling!
The device and the environment can be damaged if a torque of 3 Nm is exceeded when screwing on the connections.

- Tighten the connections with a maximum torque of 3 Nm.

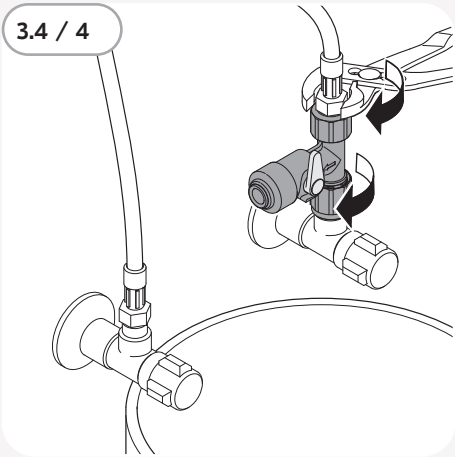

- Screw the T-piece onto the angle valve on the cold water line.
- Screw the opposite side of the T-piece onto the cold water connection of the water tap.
- Make sure that the T-piece valve is closed.
- Remove the bucket.

3.4 / 5

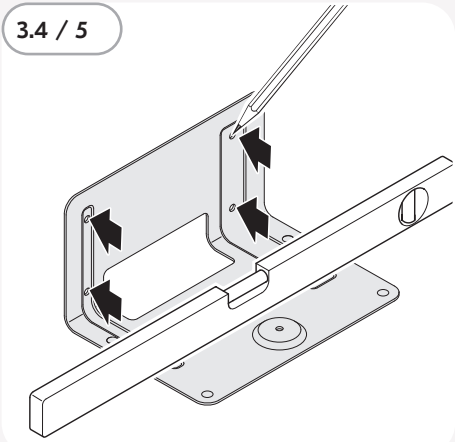

- Select a suitable position for the wall bracket.
  ➡ "3.1 Requirements applicable to the installation site" (page 11).
- Straighten the wall bracket using the spirit level.
- Mark the four fastening points.

The screws included in the scope of delivery are intended for mounting on chipboard.
When mounting on a wall, suitable fasteners must be selected.

⚠ WARNING!

Danger of explosion or electric shock!
Drilling into gas, water or electrical lines can result in dangerous situations.

- Make sure no lines are inside the wall at the fastening points.

3.4 / 6

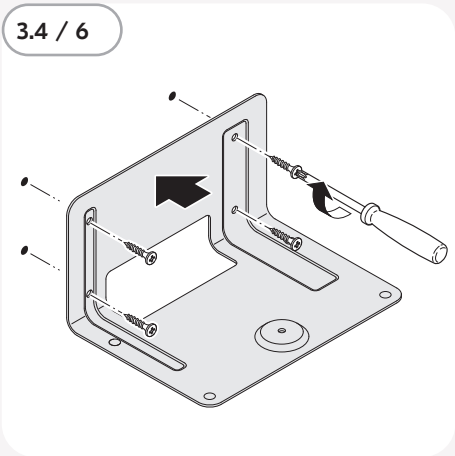

- Screw the wall bracket on with the four small screws.

3.4 / 7

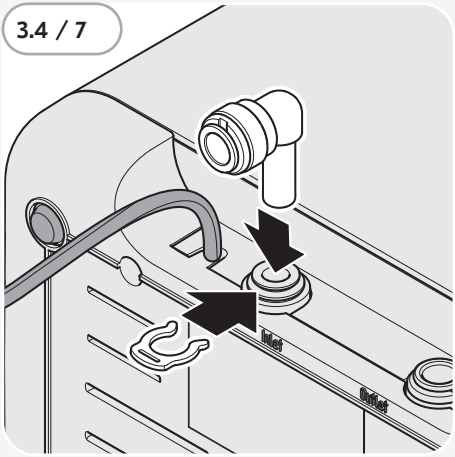

- Insert the angle piece (5⁄16") in the water inlet (left) as far as it will go.
- Secure the angled piece (5⁄16") with the safety clip (5⁄16").

3.4 / 8

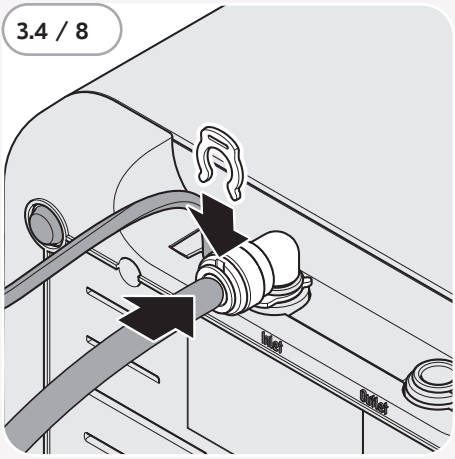

- Insert the hose (5⁄16") in the angle piece (5⁄16") as far as it will go.
- Secure the hose (5⁄16") with the safety clip (5⁄16").

3.4 / 9

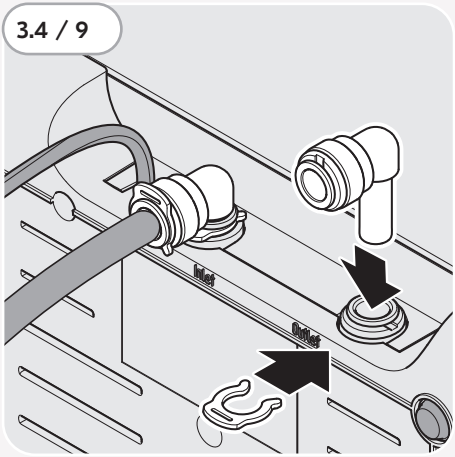

- Insert the angle piece (3⁄8") in the water outlet (right) as far as it will go.
- Secure the angled piece (3⁄8") with the safety clip (3⁄8").

3.4 / 10

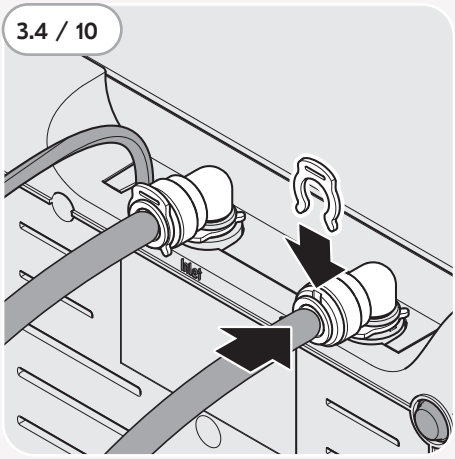

- Insert the hose (3⁄8") in the angle piece (3⁄8") as far as it will go.
- Secure the hose (3⁄8") with the safety clip (3⁄8").

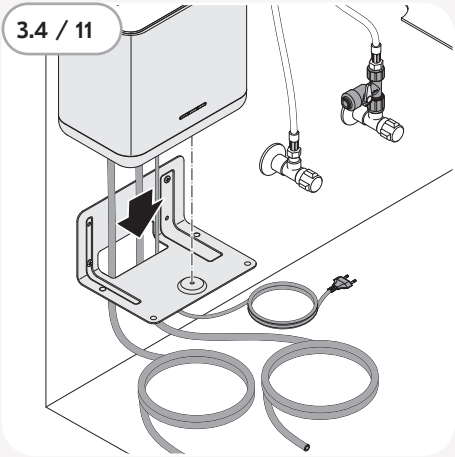

- Guide the mains cable and hoses from the top through the cut-out into the wall bracket.
- Position the device on the wall bracket.

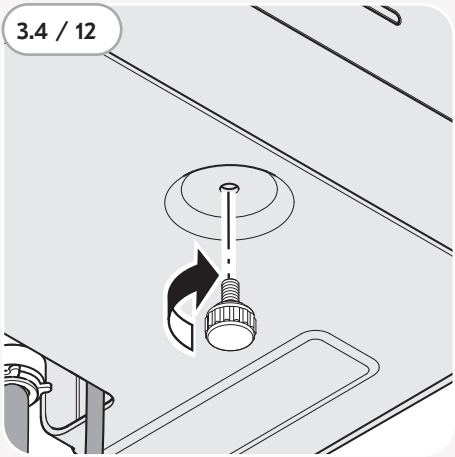

- Screw the knurled screw from below through the wall bracket into the device.

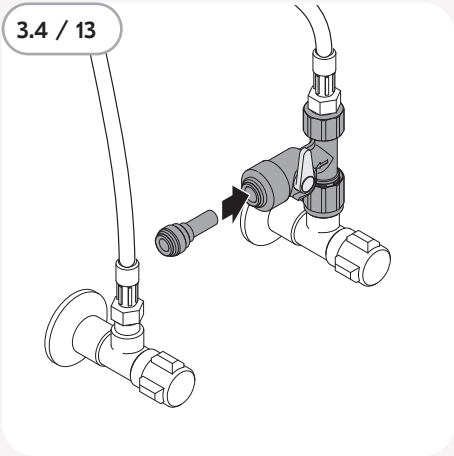

- Slide the reducer piece into the T-piece as far as it will go.

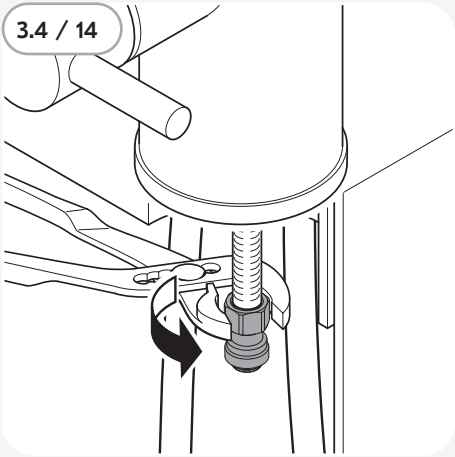

- Screw the connection piece (water tap) onto the drinking water tap.

3.4 / 15

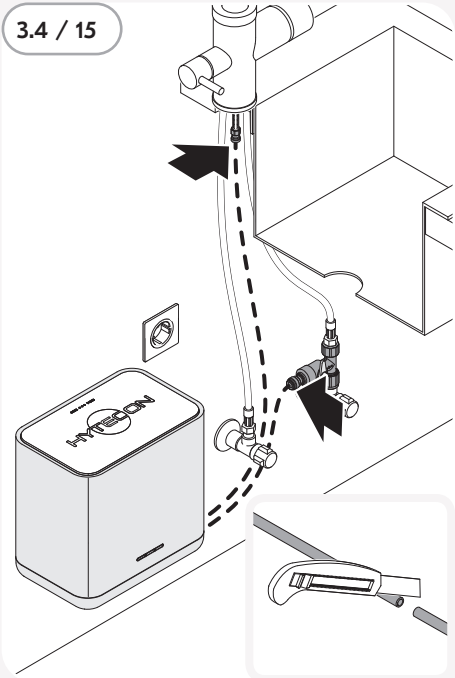

- Guide both hoses from the device to the connection piece and reducer piece respectively.
- Mark the respective hose lengths required.
- Shorten both hoses to the required lengths. Make sure the hoses are cut straight.

3.4 / 16

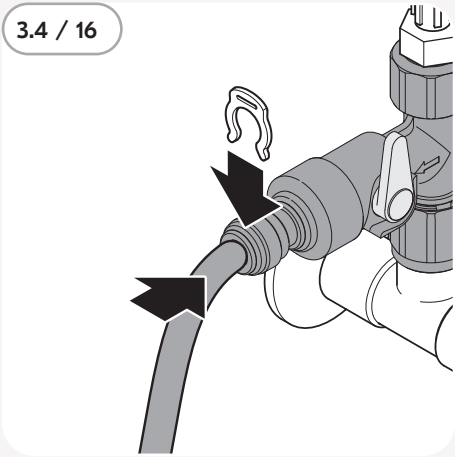

- Insert the hose (5⁄16") in the reducer piece as far as it will go.
- Secure the hose (5⁄16") with the safety clip (5⁄16").

3.4 / 17

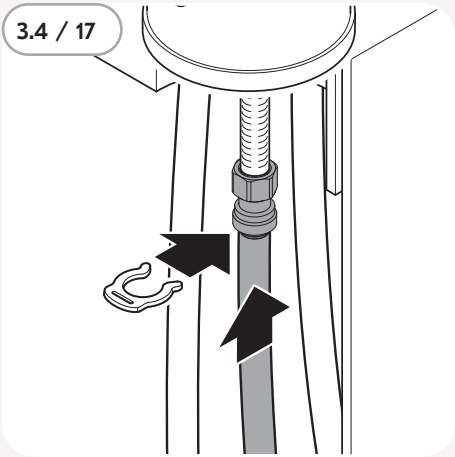

- Insert the hose (3⁄8") in the connector (water tap) as far as it will go.
- Secure the hose (3⁄8") with the safety clip (3⁄8").

3.4 / 18

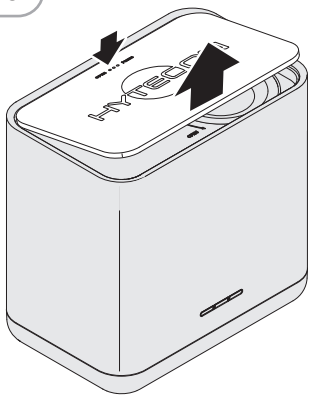

- Remove the device cover. To do so, push down on the pressure point and then grasp beneath the edge of the device cover.

3.4 / 19

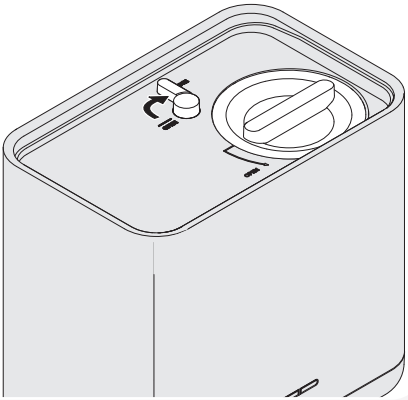

- Turn the shut-off valve in the “CLOSE” direction.

3.4 / 20

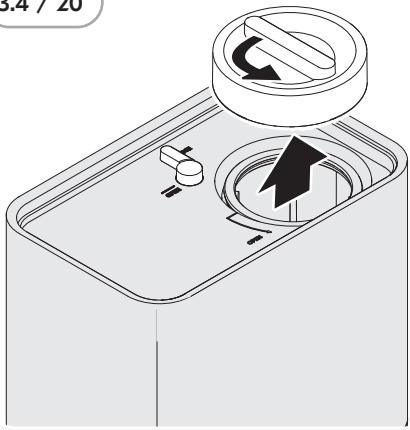

- Unscrew the screw cap for the filter chamber.

3.4 / 21

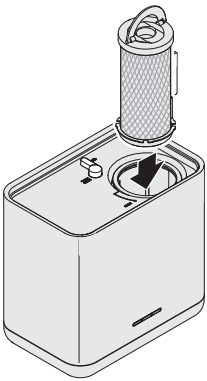

- Remove the protective film from the filter.
- Insert the filter.
- During insertion, carefully press the filter down until it latches into the device.

3.4 / 22

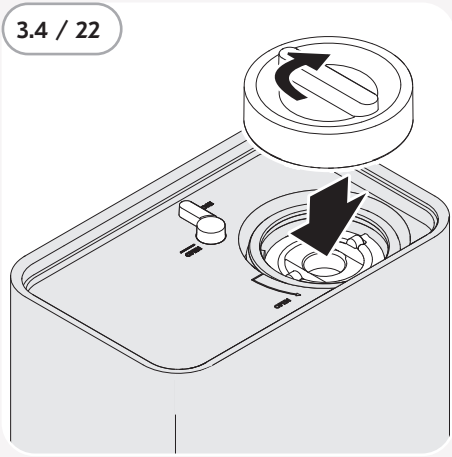

- Close the screw cap for the filter chamber until it reaches the end position.

3.5 Completing assembly

3.5 / 1

- Plug the mains plug into the socket.

As soon as the power supply has been established, the device opens a hotspot for a period of fifteen minutes. The LED flashes yellow at this time. It is possible to connect the device with the WLAN with the help of the HYPRO app.

When the device is connected to the WLAN, the LED continuously glows yellow.

To search again:
- Unplug the mains plug and plug it in again.
- Wait until the LED lights up yellow.

3.5 / 2

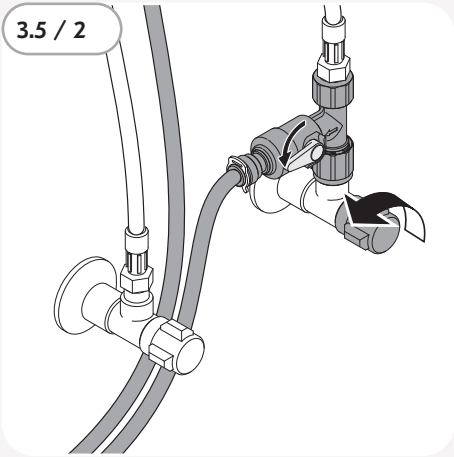

- Open the shut-off valve for the T-piece.
- Open the angle valve on the cold water line.

3.5 / 3

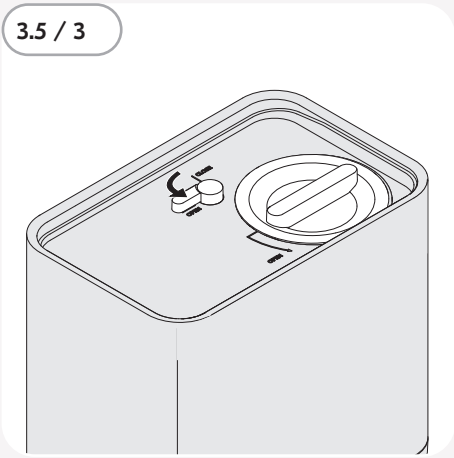

- Turn the shut-off valve in the “OPEN” direction.

3.5 / 4

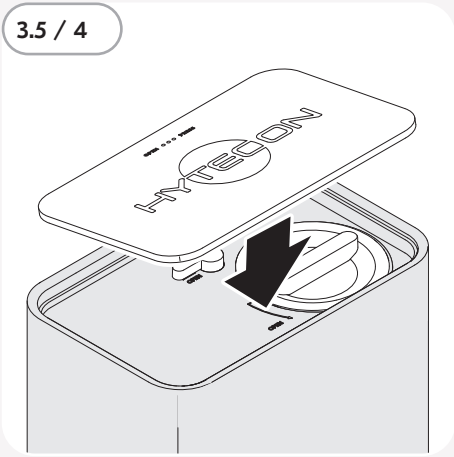

- Close the device cover.

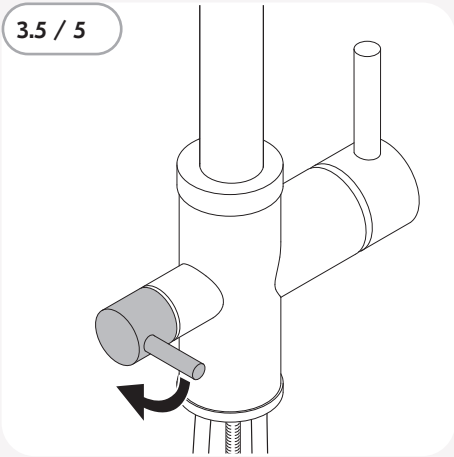

After fitting a new filter, light abrasion can result in small carbon particles in the water. The particles will not affect your health.

- Open the drinking water tap and allow the water to run for approx. 60 seconds.
- Allow the drinking water to flow until particle emission has subsided, although for a minimum of 60 seconds.

After assembly and first commissioning, check:

- Perform a visual inspection for water escaping at the connection points.

4. Use

⚠ CAUTION!

Adverse effect on the drinking water quality!
If the device has been disconnected from the power supply for a number of days, the device is unable to perform self-cleaning. The quality of the drinking water may be adversely affected.

- Allow the drinking water to run for 60 seconds before using it.

Drawing off drinking water:

- Draw off the filtered and disinfected drinking water as required.

4 / 1

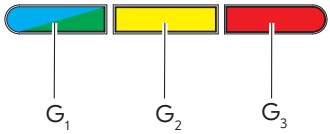

The LED display signals the operating statuses of the device to the user.

G_1	LED lights up green: The device is ready.
G_1	LED lights up blue: The device is disinfecting.
G_2	The LED flashes yellow: The device is ready for WLAN connection.
G_2	LED lights up yellow continuously: The device is connected with the WLAN.
G_3	LED lights up or flashes red: Fault or filter change. ➡ "7. Trouble-shooting" (page 27).

5. Cleaning

Information on cleaning:

- Clean the device surfaces with a non-linting, lightly dampened cloth.
- Wipe the device surfaces dry with a non-linting, dry cloth.

6. Maintenance

6.1 Changing the filter

For the device to work optimally, the filter must be changed as soon as the following criteria are met:

- Flow quantity of 2000 liters reached.
- Operating period of 4 months reached.

When the filter needs changing, the LED flashes red. When the HYPRO app is used, the user also receives notification when it is time to replace the filter.

- Remove the device cover.
  ➡ "3.4 / 18" (page 19).
- Turn the shut-off valve in the "CLOSE" direction. Never unscrew the screw cap for the filter chamber under pressure.
  ➡ "3.4 / 19" (page 19).

6.1 / 1

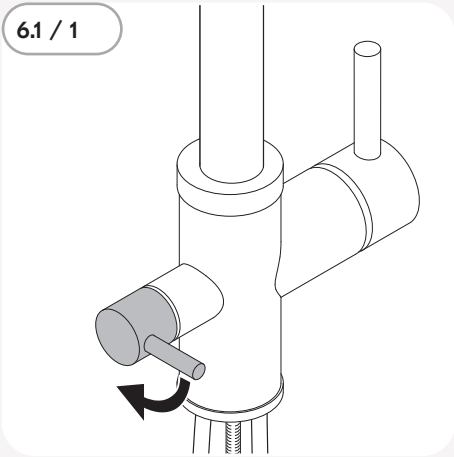

- Open the drinking water tap until no further water runs out of the water tap.
- Close the drinking water tap again to prevent a backflow of water.

⚠ ATTENTION!

Water escaping!
Water can escape when the screw cap is opened and the filter is removed. The escaping water can cause material damage.

- Wipe up and collect any escaped water immediately.

- Unscrew the screw cap for the filter chamber.
  ➡ "3.4 / 20" (page 19).

6.1 / 2

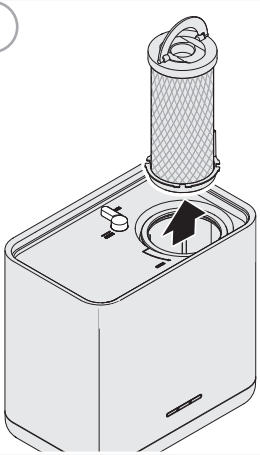

- Draw the used filter out of the device at the handle and pick up any escaped water.
- Remove the protective film from the new filter.
- Insert the new filter.
- During insertion, carefully press the filter down until it latches into the device.
  ➡ "3.4 / 21" (page 19).
- Screw the screw cap for the filter chamber shut.
  ➡ "3.4 / 22" (page 20).
- Turn the shut-off valve in the "OPEN" direction.
  ➡ "3.5 / 3" (page 21).
- Fit the device cover.
  ➡ "3.5 / 4" (page 21).
- Turn on the drinking water faucet and let the water run for at least 60 seconds, until no more particles are coming out.
  ➡ "3.5 / 5" (page 22).

6.2 Checks

- Make sure no water can penetrate at the power cable or power source.

7. Trouble-shooting

If an LED is flashing or illuminated, one or more faults are present.

To allow better analysis of faults, we recommend installing the HYPRO APP.

Possible faults are described as follows:

Description of the fault.
- Possible cause.
- Remedy.

The LED flashes red.
- No filter in the device.
- Insert an original filter.
- Filter capacity depleted.
- Change the filter.
  ➡ "6.1 Changing the filter" (page 25).

LED lights up red continuously.
- Fault in the device.
- Pull the power plug.
- Wait for 15 seconds.
- Start the device up again.
- Turn on the drinking water faucet and let the water run for at least 60 seconds.

If the malfunction persists:
- Use the HYPRO app to get further details.
- Contact customer service.

The blue LED does not light up, although water is flowing.
- Fault in the device.
- Pull the power plug.
- Wait for 15 seconds.
- Start the device up again.
- Turn on the drinking water faucet and let the water run for at least 60 seconds.

If the malfunction persists:
- Use the HYPRO app to get further details.
- Contact customer service.

The LED flashes yellow for longer than 15 minutes.
- The device is registered in the app but is not connected with the WLAN.
- Make sure the device is able to receive the signal from the WLAN router.

No water flows out at the drinking water tap.
- The shut-off tap has not been opened.
- Turn the shut-off valve in the "OPEN" direction.
  ➡ "3.5 / 3" (page 21).
- Incorrect handling.
- Check that the installation has been carried out correctly, in accordance with the user manual.
- Check that the water connections and drinking water tap are open.
- Check that the mains plug is plugged in.

If the fault persists:

- Turn the shut-off valve in the "CLOSE" direction with the water tap open.
  ➡ "3.4 / 19" (page 19).
- Turn the shut-off valve in the "OPEN" direction with the water tap open.
  ➡ "3.5 / 3" (page 21).

Quantity drawn off < 3 l/min

– Take-off quantity varies depending on the type of filter used.
– Line pressure insufficient.
- Contact your installation engineer.
– Filter capacity depleted.
- Change the filter.
  ➡ "6.1 Changing the filter" (page 25).

Water escaping at the device.

– Hose connections have not been correctly established.
- Check the hose connections and safety clips.
– Screw-on cover to the filter chamber not closed properly.
- Make sure the screw-on cover to the filter chamber is screwed to the stop.

If the fault persists:

- Close the angle valve on the cold water line.
- Contact your installation engineer.

The screw cap for the filter chamber does not release.

– The pressure in the device has not been relieved.
- Relieve the pressure in the device. Turn the shut-off valve in the "CLOSE" direction.
  ➡ "3.4 / 19" (page 19).
- Open the drinking water tap until no further water runs out of the water tap.
- Close the drinking water tap again to prevent a backflow of water.

If it is not possible to remedy a fault:

- Contact customer service.

8. Disassembly

Disassembly of the device after its service life:

- Disconnect the mains plug from the socket.
- Collect the escaped water in a bucket.
- Turn off the angle valve on the cold water line.
- Turn the shut-off valve in the “CLOSE” direction
- Open the drinking water tap until no further water runs out.
- Close the drinking water tap.
- Draw out the reducer piece.
- Unscrew the connection piece (water tap) from the drinking water tap.
- Unscrew the knurled screw below the wall bracket.
- Remove the device.
- Disassemble the wall bracket.

9. Disposal

9.1 Disposing of the packaging

⚠ ATTENTION!

Danger of environmental damage due to incorrect disposal of the packaging!

- Do not dispose of the packaging together with standard household waste.
- Submit the packaging for environmentally-friendly and correct recycling (reuse).
- Store the packaging out of the reach of children.

The packaging materials are selected on the basis of environmentally-compatible aspects and are produced from recyclable materials. The packaging materials can be returned to the raw materials cycle after use. It is possible to save valuable raw materials in this way.

- Dispose of the packaging in an environmentally-friendly way, separated into material types.

9.2 Disposing of used filters

Spent adsorption media will not be regenerated and used.

- Dispose of used filters with residual waste.

9.3 Disposing of the device

⚠ ATTENTION!

Danger of environmental damage due to incorrect disposal of the device!

The device must not be disposed of together with household waste.

- Do not dispose of the device together with standard household waste at the end of its service life.
- Contact your local or town administration to inquire about the options for environmentally-friendly and correct recycling (reuse) or disposal of the device (electrical scrap).

The device contains a
CR 2032 Li-Mn dioxide/organic electrolyte battery.

- After disassembly, render the device unusable.
- Dispose of the device and the battery according to legal regulations through a professional disposal service or your local municipal disposal facility.

10. Annex

10.1 Contact details for customer service

If you have any questions or comments:

Internet:	www.hytecon.com
Address:	HYTECON Produktion and Vertrieb GmbH Oststraβe 68 32051 Herford Germany
Email:	info@hytecon.com
Telephone:	+49 5221 28400 - 0

10.2 Data protection

Our data protection policy can be found at:
www.hytecon.com

10.3 NSF/ANSI

Tested and certified by NSF International against NSF/ANSI Standards 42, 53 and 401 for the reduction of claims specified on the Performance Data Sheet.
Compounds certified under NSF/ANSI 401 are incidental contaminants that have been detected in drinking water supplies at trace levels. These compounds can affect the public perception of drinking water quality.
This Class B system or component conforms to NSF/ANSI 55 for the supplemental bactericidal treatment disinfected public drinking water or other drinking water that has been tested and deemed acceptable for human consumption by the state or local health agency having jurisdiction. The system is only designed to reduce normally occurring nonpathogenic nuisance microorganisms. Class B systems are not intended for treatment of contaminated water.

- Refer to the NSF performance data for details on which individual contaminants to remove.
  ➡ "10.7 NSF performance data" (page 36).

10.4 FCC/ISED Notes

This device complies with part 15 of the FCC Rules. Operation is subject to the following two conditions:

1. This device may not cause harmful interference, and
2. this device must accept any interference received, including interference that may cause undesired operation.

Changes or modifications not expressly approved by the party responsible for compliance could void the user's authority to operate the equipment.

Note: This equipment has been tested and found to comply with the limits for a Class B digital device, pursuant to part 15 of the FCC Rules. These limits are designed to provide reasonable protection against harmful interference in a residential installation. This equipment generates, uses and can radiate radio frequency energy and, if not installed and used in accordance with the instructions, may cause harmful interference to radio communications. However, there is no guarantee that interference will not occur in a particular installation. If this equipment does cause harmful interference to radio or television reception, which can be determined by turning the equipment off and on, the user is encouraged to try to correct the interference by one or more of the following measures:

- Reorient or relocate the receiving antenna.
- Increase the separation between the equipment and receiver.
- Connect the equipment into an outlet on a circuit different from that to which the receiver is connected.
- Consult the dealer or an experienced radio/TV technician for help.

This equipment complies with FCC radiation exposure limits set forth for an uncontrolled environment.

This equipment should be installed and operated with minimum distance 20 cm between the radiator & your body.

This device contains licence-exempt transmitter(s)/receiver(s) that comply with Innovation, Science and Economic Development Canada's licence-exempt RSS(s).

Operation is subject to the following two conditions:

1. This device may not cause interference.
2. This device must accept any interference, including interference that may cause undesired operation of the device.

L'émetteur/récepteur exempt de licence contenu dans le présent appareil est conforme aux CNR d'Innovation, Sciences et Développement économique Canada applicables aux appareils radio exempts de licence. L'exploitation est autorisée aux deux conditions suivantes :

1. L'appareil ne doit pas produire de brouillage;
2. L'appareil doit accepter tout brouillage radioélectrique subi, même si le brouillage est susceptible d'en compromettre le fonctionnement.

This equipment complies with RSS-102 radiation exposure limits set forth for an uncontrolled environment.

This equipment should be installed and operated with minimum distance 20 cm between the radiator and your body.

Cet équipement est conforme aux limites d'exposition aux rayonnements RSS-102 établies pour un environnement non contrôlé.
Cet équipement doit être installé et utilisé à une distance minimale de 20 cm entre le radiateur et votre corps.

10.5 List of replacement parts

Replacement parts can be ordered from customer service.
➡ "10.1 Contact details for customer service" (page 31).

Replacement part	Item No.	Illustration
Wall bracket	1000014	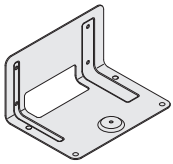
Hose set	1001	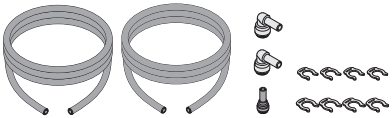
Device cover	1000012	
Screw cap for the filter chamber	1000032	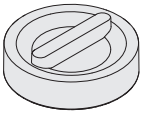
Filter	1000035	

10.6 CE declaration of conformity

Declaration of conformity

We hereby declare on our own responsibility that the design of the device

HYPRO Water UV-LED drinking water filter

in the version which we have placed on the market, complies with the relevant harmonisation legislation of the European Union:

2014/53/EU

2011/65/EU

Harmonised standards applied are in particular:

ETSI EN 300 330 V2.1.1 (2017-02)

ETSI EN 300 328 V2.1.1 (2016-11)

ETSI EN 301 489-1 V2.1.1 (2017-02)

ETSI EN 301 489-3 V1.6.1 (2013-08)

DIN EN IEC 63000:2019-05

Technical documentation:

HYTECON Produktion und Vertrieb GmbH

Oststr. 68

D - 32051 Herford

Herford, 01.10.2019

Jörn Lohmann
Managing Director

10.7 NSF performance data

09.2020