XR-21A User manual

Version V1

Copyright ©2019

Copyright © 2019 ShenzhenJiXinInteligence Co., Ltd All Rights Reserved

This device is intended only for OEM integrators under the following conditions:

1) The antenna must be installed such that 20 cm is maintained between the antenna and users, and

2) This device and its antenna(s) must not be co - located with any other transmitters except in accordance with FCC multi - transmitter product procedures. Referring to the multi - transmitter policy, multiple - transmitter(s) and module(s) can be operated simultaneously without C2P.

3) For all products market in US, OEM has to limit the operation channels in CH1 to CH11 for 2.4G band by supplied firmware programming tool. OEM shall not supply any tool or info to the end - user regarding to Regulatory Domain change.

USERS MANUAL OF THE END PRODUCT:

In the users manual of the end product, the end user has to be informed to keep at least 20cm separation with the antenna while this end product is installed and operated. The end user has to be informed that the FCC radio-frequency exposure guidelines for an uncontrolled environment can be satisfied.

The end user has to also be informed that any changes or modifications not expressly approved by the manufacturer could void the user's authority to operate this equipment . If the size of the end product is smaller than 8x10cm, then additional FCC part 15.19 statement is required to be available in the users manual:

This device complies with Part 15 of FCC rules. Operation is subject to the following two co nditions: (1) this device may not cause harmful interference and (2) this device must accept any interference received, including interference that may cause undesired operation.

LABEL OF THE END PRODUCT:

The final end product must be labeled in a visible area with the following " Contains FCC ID:2AVTT-XR21A ". If the size of the end product is larger than 8x10cm, then the following FCC part 15.19 statement has to also be available on the label:

This device complies with Part 15 of FCC rules. Operation is subject to the following two conditions: (1) this device may not cause harmful interference and (2) this device must accept any interference received, including interference that may cause undesired operation.

This equipment has been tested and found to comply with the limits for a Class B digital device, pursuant to part 15 of the FCC Rules. These limits are designed to provide reasonable protection against harmful interference in a residential installation. This equipment generates, uses and can radiate radio frequency energy and, if not installed and used in accordance with the instructions, may cause harmful interference to radio communications. However, there is no guarantee that interference will not occur in a particular installation. If this equipment does cause harmful interference to radio or television reception, which can be determined by turning the equipment off and on, the user is encouraged to try to correct the interference by one or more of the following measures:

—Reorient or relocate the receiving antenna.

—Increase the separation between the equipment and receiver.

—Connect the equipment into an outlet on a circuit different from that to which the receiver is connected.

—Consult the dealer or an experienced radio/TV technician for help.

Copyright © 2019 ShenzhenJiXinInteligence Co., Ltd All Rights Reserved

1. Product Overview

XR-21A WiFi module was developed for a wide range of IoT applications, Its core processor XR808 integrates the ARM Cortex-M4F 32-bit microcontroller in a smaller package, supporting the master clock frequency up to 160MHz; Integrates high-performance WLAN system with Wi-Fi MAC/BB/RF/PA/LNA units; Integrates advanced power management units for ultra-low power consumption with multiple sleep modes and fast wake-up mechanisms; Integrates hardware encryption engine to supports AES/DES/3DES/SHA-1/ MD5/ CRC/ SHA256/TRNG; Integrates large memory and rich peripherals.

XR-21A WiFi module supports standard IEEE802.11 b/g/n protocol, supports RTOS, with a complete TCP/IP protocol stack, Users can use the module to add networking capabilities to existing devices, or can use it as a master design wireless network product, XR808 can be started directly from external flash memory, the on-chip high-speed buffer memory helps improve system performance and reduce RAM requirements.

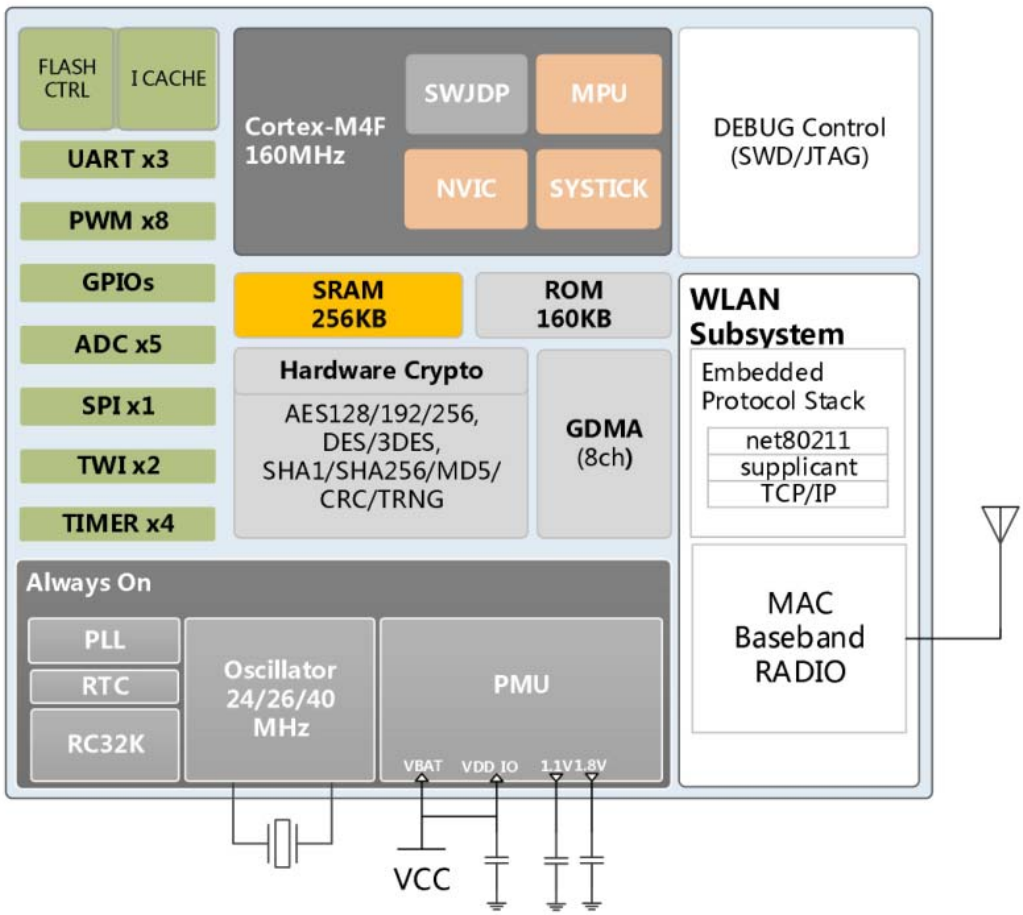

Copyright © 2019 Shenzhen JiXinInteligence Co., Ltd All Rights Reserved

1.1 Appearance Dimensions

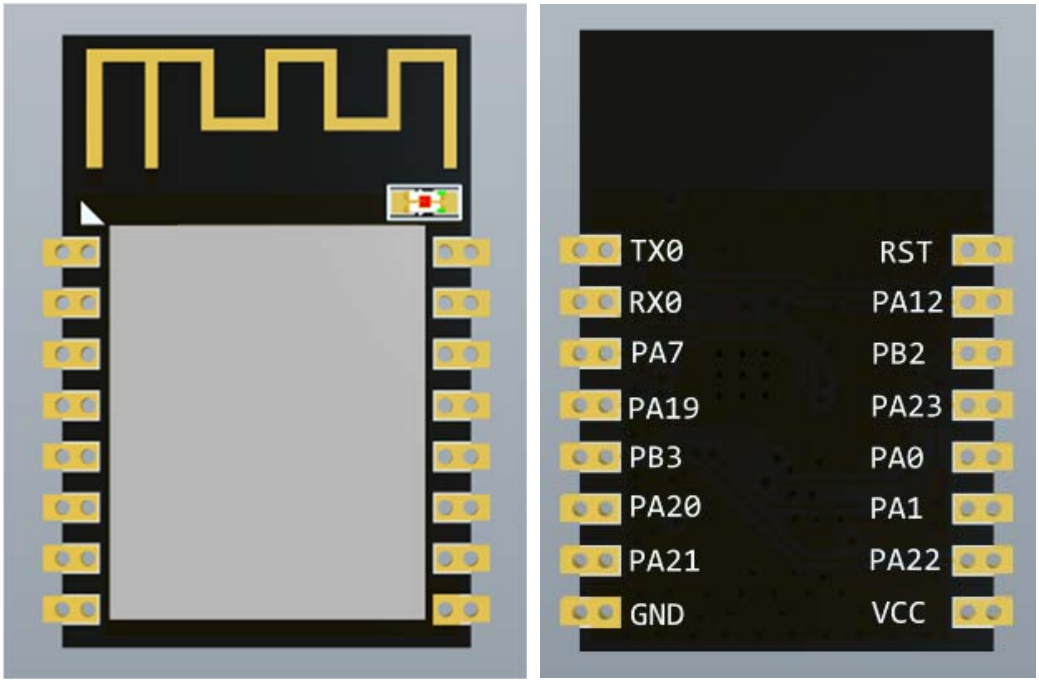

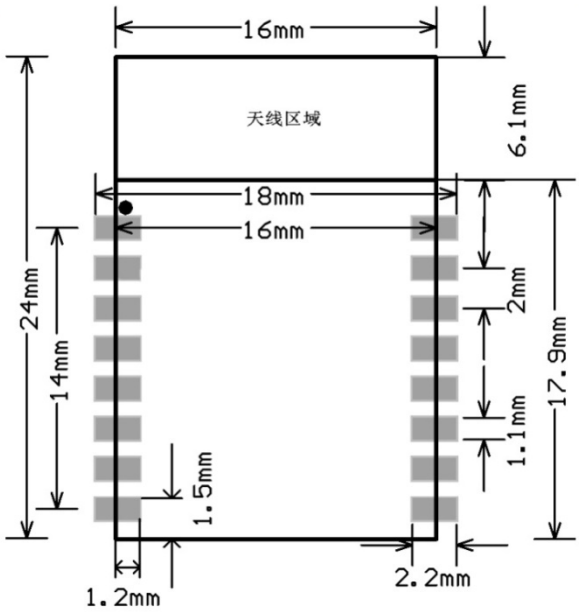

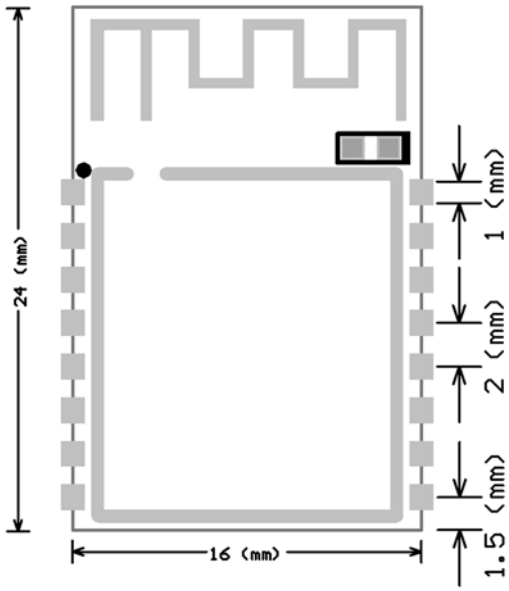

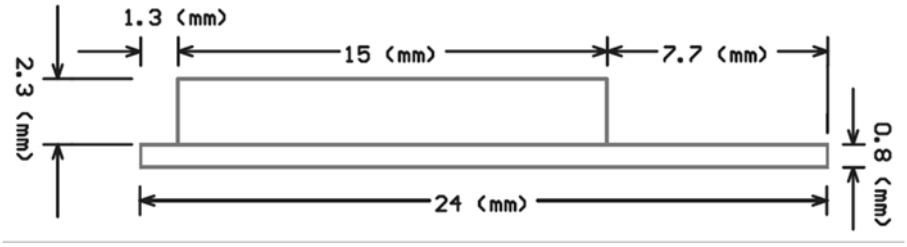

Copyright © 2019 Shenzhen JiXinInteligence Co., Ltd All Rights Reserved

1.2 Features

- IEEE 802.11b/g/n, 1x1 SISO 2.4GHz
- Built-in ARM Cortex-M4F 32bit MCU with main frequency from 32KHz to 160MHz, support RTOS
- Built-in 256KB SRAM and 160KB ROM
- Support external Flash and eXecute In Place(XIP)
- 8 shared universal DMA channels
- Built-in 6 ways 12bit SAR type A/D converter
- Built-in Wi-Fi MAC/ BB/RF/PA/LNA
- Support WEP, WPA/WPA2, WPS2.0
- Support UART/GPIO/ADC/PWM/I2C/SPI interface
- Use SMD-16 assemble model
- Support multiple sleep modes and current as low as 4uA in deep sleep mode
- Support AES/DES/3DES/SHA/MD5/CRC encryption engine
- Support STA/AP/STA+AP operation modes
- Support Smart Config/AirKiss (WeChat)
- Support Local firmware upgrade using UART and remote upgrade (FOTA)
- Has universal and friendly AT command set
- Support secondary development, support Windows, Linux development environment

Copyright © 2019 Shenzhen JiXinInteligence Co., Ltd All Rights Reserved

1.3 Key parameter

Table 1.1 Description of the main parameters

Module model	XR-21A
Mounting	SMD16
Size(mm)	24*16*3(±0.2)
Cert.	FCC、CE、IC、REACH、RoHS
SPI Flash	32Mbit(default)
Interface	UART/GPIO/ADC/PWM /I2C/SPI
Number of GPIO	13
UART baud.	9600/19200/38400/115200/921600 bps
Freq.	2412 ~2462MHz
Antenna	Onboard PCB antenna
Tx Power	802.11b: 17±2 dBm (@11Mbps) 802.11g: 15±2 dBm (@54Mbps) 802.11n: 14±2 dBm (@HT20, MCS7)
Rx Sensitivity	CCK, 1 Mbps : -97dBm CCK, 11 Mbps: -92dBm 6 Mbps (1/2 BPSK): -92dBm

Copyright © 2019 Shenzhen JiXinInteligence Co., Ltd All Rights Reserved

	54 Mbps (3/4 64-QAM): -76dBm HT20, MCS7 (65 Mbps, 72.2 Mbps): -74dBm
Power dissipation (Typical)	RX Active(MCU active, DC-DC mode):31mA TX Active(MCU active, DC-DC mode): 164mA@11n MCS7 14dBm 192mA@11b CCK 19dBm Standby: ~26.5uA Hibernation: ~4uA Shutdown: ~0.5uA
Security	WEP/WPA-PSK/WPA2-PSK/WPS2.0
Power Supply	DC 2.7V ~ 5.5V , Imax >300mA
Temperature	-40 ℃ ~ 85 ℃
Storage Condition	-55 ℃ ~ 150℃ ,< 90%RH

Copyright © 2019 Shenzhen JiXinInteligence Co., Ltd All Rights Reserved

2. Pin definition

XR-21A module has 16 pins , features are shown in Figure 2.1 and Table 2.2.

Figure 2.1 XR-21A Pin diagram

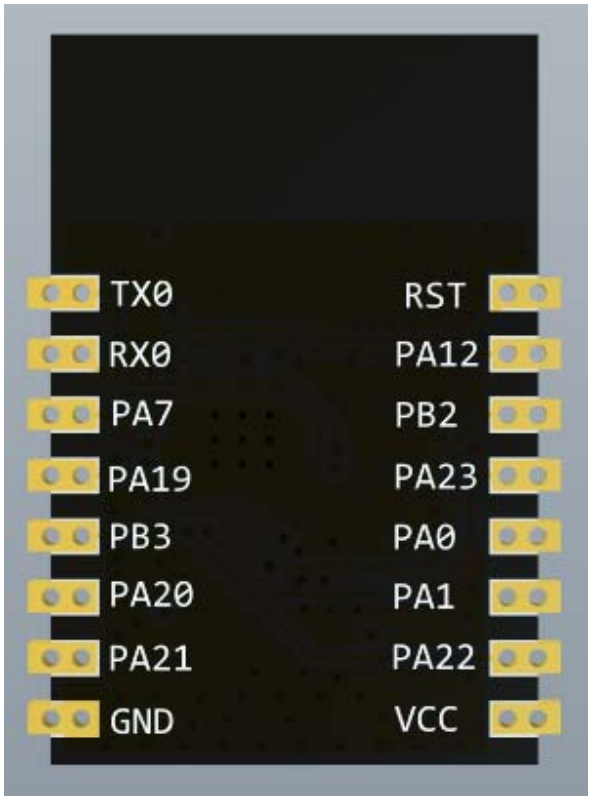

Table 2.2 Pin description

Number	Name	Function description
1	RST	Reset
2	PA12	ADC_CH2;PWM4/ECT4;IR_TX；EINTA12
3	PB2	SWD_TMS；JTAG_TD0；PWM6/ECT6；EINTB2；download mode: pull-down，work mode: do not handle or pull-up

Copyright © 2019 Shenzhen JiXinInteligence Co., Ltd All Rights Reserved

4	PA23	EXT_DCDC_PUP ; WUPIO9(wake up IO) ; EINTA23 ; default cannot be high
5	PA0	TWI1_SCL ; EINTA0
6	PA1	TWI1_SDA ; EINTA1 ; PA18; TWI0_SDA; IR_TX; IR_RX; EINTA18
7	PA22	UART2_TX ; PWM3/ECT3 ; SPI1_CS0 ; WUPIO8 ; EINTA22
8	VCC	power supply, 2.7~5.5V ;
9	GND	ground
10	PA21	UART2_RX; PWM2/ECT2 ; SPI1_CLK ; WUPIO7 ; EINTA21
11	PA20	UART2_CTS;TWI0_SDA;PWM1/ECT1;SPI1_MISO; WUPIO6;EINTA20
12	PB3	SWD_TCK ; JTAG_TDI ; PWM7/ECT7 ; EINTB3; download mode :pull-down, Run mode :do not handle or pull-up
13	PA19	UART2_RTS;TWI0_SCL;PWM0/ECT0;SPI1_MOSI; WUPIO5; EINTA19
14	PA7	UART1_TX ; TWI0_SDA ; EINTA7 ; PA17; WUPIO4;TWI0_SCL; IR_RX; 32KOSCO; EINTA17
15	RX0	UART0_RX ; JTAG_TCK ; PWM5/ECT5 ; SWD_TCK ; EINTB1
16	TX0	UART0_TX;JTAG_TMS ; PWM4/ECT4 ; SWD_TMS ; EINTB0

Copyright © 2019 Shenzhen JiXinInteligence Co., Ltd All Rights Reserved

Table 2.3 Start mode

mode	RST	PB2	PB3
Download	rising edge	low	low
Run	rising edge	low	high
		high	low
		high	high

Notice:PB2 and PB3 had beenpulled up in module,module has self-reset function

3. Electrical parameters

3.1 Electrical characteristics

parameter		test condition	min	typ	max	unit
Storage Temp.		-	-55	normal	150	℃
Work temp.		-	-40	20	85	℃
Max welding temp.		IPC/JEDEC J-STD-020	-	-	260	℃
Supply volt.		VCC	2.7	3.3/5	5.5	V
I/O	V_{IL}	VCC_IO=3.3V	-0.3	-	1.32	V

Copyright © 2019 Shenzhen JiXinInteligence Co., Ltd All Rights Reserved

	V_{IH}	VCC_IO=3.3V	2.06	-	3.6	V
	V_{OL}	VCC_IO=3.3V, |IOL|=7.5~50 mA	-0.3	-	0.4	V
	V_{OH}	VCC_IO=3.3V, |IOL|=7.5~50 mA	2.9	-	3.4	V
	I_{MAX}	-	-	-	12	mA

3.2 Wi-Fi RF characteristic

Description	**Min**	**Typ.**	**Max**	**Unit**
Central Freq.	2412	-	2462	MHz
Enter reflection value	-	-	-10	dB
Transmit Power				
CCK, 1 Mbps	17.08	17.48	-	dBm
CCK, 11 Mbps	16.74	17.03	-	dBm
6 Mbps OFDM	16.89	17.36	-	dBm
54Mbps OFDM	14.91	15.15	-	dBm
HT20, MCS0	15.50	16.02	-	dBm
HT20, MCS7	14.01	15.10	-	dBm

Copyright © 2019 Shenzhen JiXinInteligence Co., Ltd All Rights Reserved

EVM				
CCK, 1 Mbps	-19.44	-19.85	-	dB
CCK, 11 Mbps	-21.66	-21.96	-	dB
6 Mbps OFDM	-19.46	-20.01	-	dB
54Mbps OFDM	-31.59	-32. 8	-	dB
HT20, MCS0	-23.14	-23.45	-	dB
HT20, MCS7	-32.22	-32.7	-	dB
Receiver Sensitivity				
CCK, 1 Mbps	-	-97	-	dBm
CCK, 11 Mbps	-	-92	-	dBm
6 Mbps OFDM	-	-92	-	dBm
54 Mbps OFDM	-	-76	-	dBm
HT20, MCS0	-	-92	-	dBm
HT20, MCS7	-	-74	-	dBm

3.3 Power dissipation

XR808, 25℃, VCC=3.3V,VDD_ANA=1.8V, MCU 160MHz

Work mode	MCU state	WLANs tate	TX/RX	Test condition		Min.	Typ.	Max.	unit
ACTIVE	Active	Active	TX	1M DSSS	17dBm	-	217.0	-	mA
				11M CCK	17dBm	-	224.0	-	mA

Copyright © 2019 Shenzhen JiXinInteligence Co., Ltd All Rights Reserved

				6M OFDM	16dBm	-	200.0	-	mA
				54M OFDM	16dBm	-	212.0	-	mA
				HT20,MCS0	16dBm	-	209.0	-	mA
				HT20,MCS7	15dBm	-	204.0	-	mA
			RX	1M DSSS		-	39.0	-	mA
				11M CCK		-	40.0	-	mA
				54M OFDM		-	46.0	-	mA
				HT20,MCS0		-	42.0	-	mA
				HT20,MCS7		-	49.0	-	mA
STANDBY	Sleep	Active	TX	1M DSSS,null frame	17dBm	-	217.0	-	mA
			RX	RX listen		-	40.5	-	mA
				1M DSSS		-	33.3	-	mA
		PS Mode	RX	DTIM1		-	1074.0	-	uA
				DTIM3		-	435.0	-	uA
				DTIM8		-	200.0	-	uA
				DTIM10		-	167.0	-	uA
		OFF	-	-		-	47.0	-	uA
HIBERNATION	OFF	OFF	-	-		-	3.5	-	uA
SHUTDOWN	OFF	OFF	-	-		-	0.5	-	uA

Notice：

- ACTIVE mode， the power dissipation value is tested in MCU and WLAN activing.
- STANDBY mode ，MCU is in sleep，can be awakened by peripherals。 For example：When the system has no task for a long time and needs to be connected to the network, close most peripherals, retain the network communication capacity, and wake up the system for processing as soon as possible when the data is received.
- HIBERNATION mode retains only RTC, waiting for Timer or wake-up IO interrupt

Copyright © 2019 Shenzhen JiXinInteligence Co., Ltd All Rights Reserved

4. Reflow welding temperature curve

Refer to IPC/JEDEC standard：Peak Temperature : <250°C；Number of Times: ≤2 times；

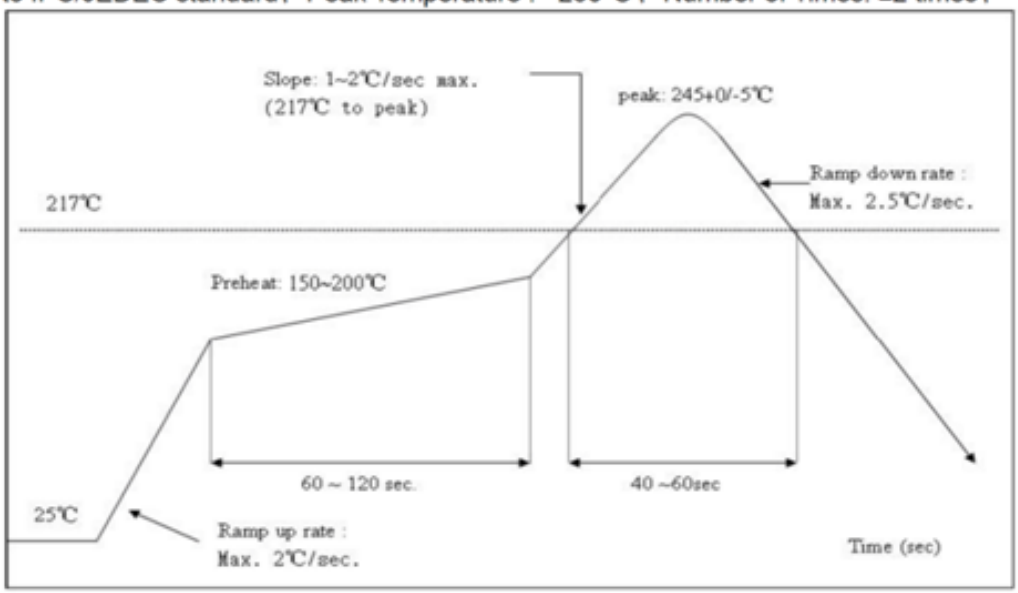

5. Application circuit

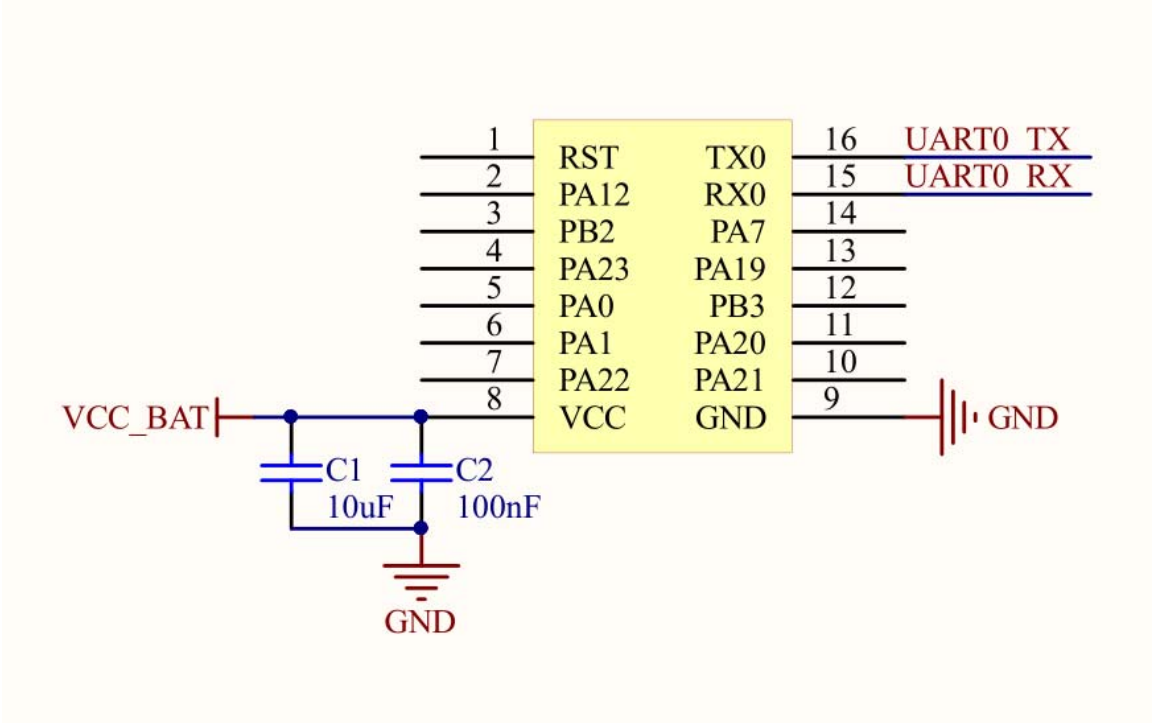

Copyright © 2019 Shenzhen JiXinInteligence Co., Ltd All Rights Reserved

6. Contact Us

Address：A505 Room,Business Building,Suojia Science Park,Xixiang,Baoan District,Shenzhen

Telephone：0755-23220940

Website：www.aimachip.com

Copyright © 2019 Shenzhen JiXinInteligence Co., Ltd All Rights Reserved

Federal Communication Commission Statement (FCC, U.S.)

This equipment has been tested and found to comply with the limits for a Class B digital device, pursuant to Part 15 of the FCC Rules. These limits are designed to provide reasonable protection against harmful interference in a residential installation. This equipment generates, uses and can radiate radio frequency energy and, if not installed and used in accordance with the instructions, may cause harmful interference to radio communications. However, there is no guarantee that interference will not occur in a particular installation. If this equipment does cause harmful interference to radio or television reception, which can be determined by turning the equipment off and on, the user is encouraged to try to correct the interference by one of the following measures:
- Reorient or relocate the receiving antenna.
- Increase the separation between the equipment and receiver.
- Connect the equipment into an outlet on a circuit different from that to which the receiver is connected.
- Consult the dealer or an experienced radio/TV technician for help.

This device complies with Part 15 of the FCC Rules. Operation is subject to the following two conditions: (1) This device may not cause harmful interference, and (2) this device must accept any interference received, including interference that may cause undesired operation.

FCC Caution:
Any changes or modifications not expressly approved by the party responsible for compliance could void the user's authority to operate this equipment.

IMPORTANT NOTES

Co-location warning:
This transmitter must not be co-located or operating in conjunction with any other antenna or transmitter.

OEM integration instructions:
This device is intended only for OEM integrators under the following conditions:

The transmitter module may not be co-located with any other transmitter or antenna. The module shall be only used with the external antenna(s) that has been originally tested and certified with this module.

As long as the conditions above are met, further transmitter test will not be required. However, the OEM integrator is still responsible for testing their end-product for any additional compliance requirements required with this module installed (for example, digital device emissions, PC peripheral requirements, etc.).

Validity of using the module certification:
In the event that these conditions cannot be met (for example certain laptop configurations or co-location with another transmitter), then the FCC authorization for this module in combination with the host equipment is no longer considered valid and the FCC ID of the module cannot be used on the final product. In these circumstances, the OEM integrator will be responsible for re-evaluating the end product (including the transmitter) and obtaining a separate FCC authorization.

End product labeling:
The final end product must be labeled in a visible area with the following: “Contains Transmitter Module FCC ID: 2AVTT-XR21A”.

Information that must be placed in the end user manual:
The OEM integrator has to be aware not to provide information to the end user regarding how to install or remove this RF module in the user's manual of the end product which integrates this module. The end user manual shall include all required regulatory information/warning as show in this manual.

Integration instructions for host product manufacturers according to KDB 996369 D03 OEM Manual v01

2.2 List of applicable FCC rules
FCC Part 15 Subpart C 15.247 & 15.207 & 15.209

2.3 Specific operational use conditions
The module is a WIFI module with WIFI 2.4G function.
Operation Frequency: 2412~2462MHz
Number of Channel: 11
Modulation: 802.11b CCK; 802.11g/n OFDM
Type: PCB Antenna
Gain: 2 dBi Max.
The module can be used for mobile or applications with a maximum 2dBi antenna. The host manufacturer installing this module into their product must ensure that the final composit product complies with the FCC requirements by a technical assessment or evaluation to the FCC rules, including the transmitter operaition. The host manufacturer has to be aware not to provide information to the end user regarding how to install or remove this RF module in the user's manual of the end product which integrates this module. The end user manual shall include all required regulatory information/warning as show in this manual.

2.4 Limited module procedures
Not applicable. The module is a Single module and complies with the requirement of FCC Part 15.212.

2.5 Trace antenna designs
Not applicable. The module has its own antenna, and doesn’t need a host’s printed board microstrip trace antenna etc.

2.6 RF exposure considerations
The module must be installed in the host equipment such that at least 20cm is maintained between the antenna and users’ body; and if RF exposure statement or module layout is changed, then the host product manufacturer required to take responsibility of the module through a change in FCC ID or new application. The FCC ID of the module cannot be used on the final product. In these circumstances, the host manufacturer will be responsible for re-evaluating the end product (including the transmitter) and obtaining a separate FCC authorization

2.7 Antennas
Antenna Specification are as follows:
Type: PCB Antenna
Gain: 2 dBi
This device is intended only for host manufacturers under the following conditions:
The transmitter module may not be co-located with any other transmitter or antenna;
The module shall be only used with the internal antenna(s) that has been originally tested and certified with this module. The antenna must be either permanently attached or employ a ‘unique’ antenna coupler.
As long as the conditions above are met, further transmitter test will not be required. However, the host manufacturer is still responsible for testing their end-product for any additional compliance requirements required with this module installed (for example, digital device emissions, PC peripheral requirements, etc.).

2.8 Label and compliance information
Host product manufacturers need to provide a physical or e-label stating “Contains FCC ID: 2AVTT-XR21A” with their finished product.

2.9 Information on test modes and additional testing requirements

Operation Frequency: 2412~2462MHz
Number of Channel: 11
Modulation: GFSK, 802.11b CCK; 802.11g/n OFDM
Host manufacturer must perfom test of radiated & conducted emission and spurious emission, etc according to the actual test modes for a stand-alone modular transmitter in a host, as well as for multiple simultaneously transmitting modules or other transmitters in a host product.
Only when all the test results of test modes comply with FCC requirements, then the end product can be sold legally.

2.10 Additional testing, Part 15 Subpart B disclaimer

The modular transmitter is only FCC authorized for FCC Part 15 Subpart C 15.247 & 15.207 & 15.209 and that the host product manufacturer is responsible for compliance to any other FCC rules that apply to the host not covered by the modular transmitter grant of certification. If the grantee markets their product as being Part 15 Subpart B compliant (when it also contains unintentional-radiator digital circuity), then the grantee shall provide a notice stating that the final host product still requires Part 15 Subpart B compliance testing with the modular transmitter installed.

FCC STATEMENT :

This device complies with Part 15 of the FCC Rules. Operation is subject to the following two conditions:

(1) This device may not cause harmful interference, and

(2) This device must accept any interference received, including interference that may cause undesired operation.

Warning: Changes or modifications not expressly approved by the party responsible for compliance could void the user's authority to operate the equipment.

NOTE: This equipment has been tested and found to comply with the limits for a Class B digital device, pursuant to Part 15 of the FCC Rules. These limits are designed to provide reasonable protection against harmful interference in a residential installation. This equipment generates uses and can radiate radio frequency energy and, if not installed and used in accordance with the instructions, may cause harmful interference to radio communications. However, there is no guarantee that interference will not occur in a particular installation. If this equipment does cause harmful interference to radio or television reception, which can be determined by turning the equipment off and on, the user is encouraged to try to correct the interference by one or more of the following measures:

Reorient or relocate the receiving antenna.

Increase the separation between the equipment and receiver.

Connect the equipment into an outlet on a circuit different from that to which the receiver is connected.

Consult the dealer or an experienced radio/TV technician for help.

FCC Radiation Exposure Statement:

This equipment complies with FCC radiation exposure limits set forth for an uncontrolled environment. This equipment should be installed and operated with minimum distance 20cm between the radiator & your body.