XR-31B User manual

Version V1

Copyright ©2019

Copyright © 2019 ShenzhenJiXinInteligence Co., Ltd All Rights Reserved

This device is intended only for OEM integrators under the following conditions:

1) The antenna must be installed such that 20 cm is maintained between the antenna and users, and

2) This device and its antenna(s) must not be co - located with any other transmitters except in accordance with FCC multi - transmitter product procedures. Referring to the multi - transmitter policy, multiple - transmitter(s) and module(s) can be operated simultaneously without C2P.

3) For all products market in US, OEM has to limit the operation channels in CH1 to CH11 for 2.4G band by supplied firmware programming tool. OEM shall not supply any tool or info to the end - user regarding to Regulatory Domain change.

USERS MANUAL OF THE END PRODUCT:

In the users manual of the end product, the end user has to be informed to keep at least 20cm separation with the antenna while this end product is installed and operated. The end user has to be informed that the FCC radio-frequency exposure guidelines for an uncontrolled environment can be satisfied.

The end user has to also be informed that any changes or modifications not expressly approved by the manufacturer could void the user's authority to operate this equipment . If the size of the end product is smaller than 8x10cm, then additional FCC part 15.19 statement is required to be available in the users manual:

This device complies with Part 15 of FCC rules. Operation is subject to the following two conditions: (1) this device may not cause harmful interference and (2) this device must accept any interference received, including interference that may cause undesired operation.

LABEL OF THE END PRODUCT:

The final end product must be labeled in a visible area with the following " Contains FCC ID: 2AVTT-XR31B ". If the size of the end product is larger than 8x10cm, then the following FCC part 15.19 statement has to also be available on the label:

This device complies with Part 15 of FCC rules. Operation is subject to the following two conditions: (1) this device may not cause harmful interference and (2) this device must accept any interference received, including interference that may cause undesired operation.

Labels: Host Device must contain the following label on the outside of the unit:

Contains FCC ID: 2AVTT-XR31B

Installation Guidance

The final host / module combination may also need to be evaluated against the FCC Part 15B criteria for unintentional radiators in order to be properly authorized for operation as a Part 15 digital device. The user's manual or instruction manual for an intentional or unintentional radiator shall caution the user that changes or modifications not expressly approved by the party responsible for compliance could void the user's authority to operate the equipment. In cases where the manual is provided only in a form other than paper, such as on a computer disk or over the Internet, the information required by this section may be included in the manual in that alternative form, provided the user can reasonably be expected to have the capability to access information in that form.

To ensure compliance with all non-transmitter functions the host manufacturer is responsible for ensuring compliance with the module(s) installed and fully operational. For example, if a host was previously authorized as an unintentional radiator under the Declaration of Conformity procedure without a transmitter certified module and a module is added, the host manufacturer is responsible for ensuring that the after the module is installed and operational the host continues to be compliant with the Part 15B unintentional radiator requirements.

The FCC rule/s for this module are CFR 47 Part 15 Subpart C.

Additional testing and certification may be necessary when multiple modules are used.

Copyright © 2019 ShenzhenJiXinInteligence Co., Ltd All Rights Reserved

1. Product Overview

XR-31B WiFi module was developed for a wide range of IoT applications, Its core processor XR808 integrated the ARM Cortex-M4F 32-bit microcontroller in a smaller package, supporting the master clock frequency up to 160MHz; Integrated high-performance WLAN system with Wi-Fi MAC/BB/RF/PA/LNA units; Integrated advanced power management units for ultra-low power consumption with multiple sleep modes and fast wake-up mechanisms; Integrated hardware encryption engine to supports AES/DES/3DES/SHA-1/ MD5/ CRC/ SHA256/TRNG; Integrated large memory and rich peripherals.

XR-31B WiFi module supports standard IEEE802.11 b/g/n protocol, supports RTOS, with a complete TCP/IP protocol stack, Users can use the module to add networking capabilities to existing devices, or can use it as a master design wireless network product, XR808 can be started directly from external flash memory, the on-chip high-speed buffer memory helps improve system performance and reduce RAM requirements.

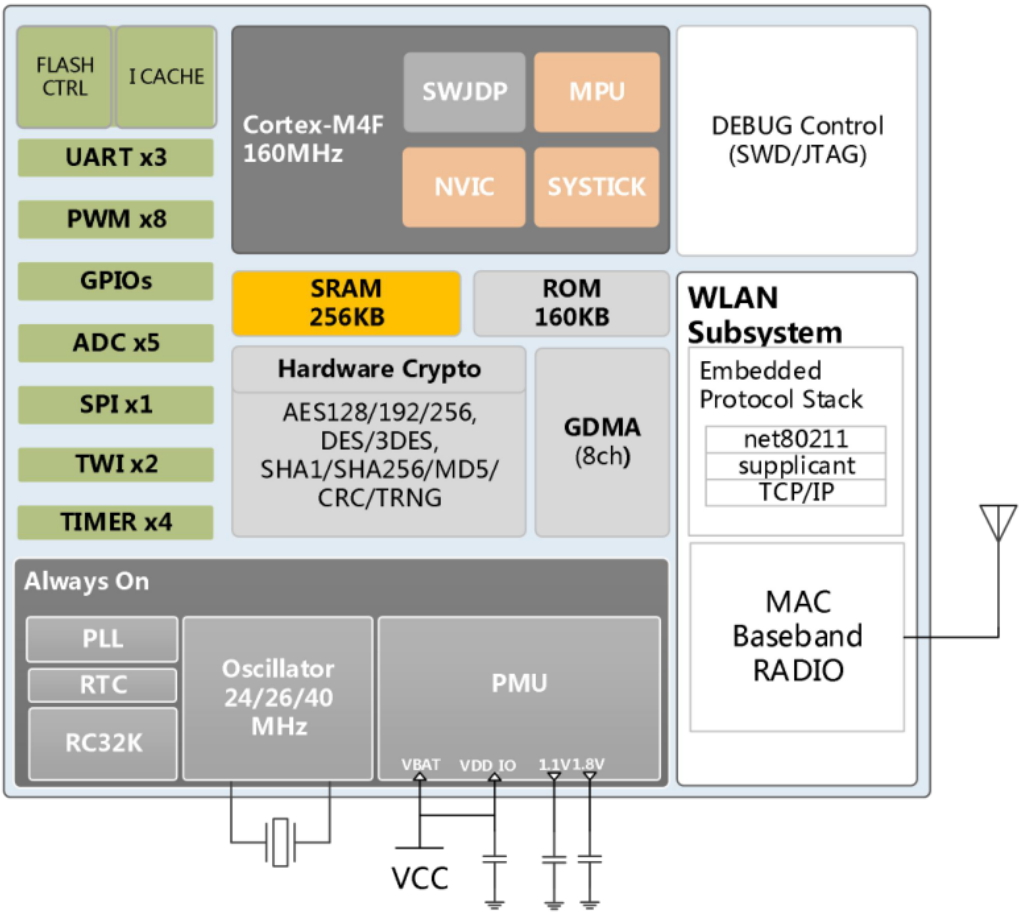

Copyright © 2019 Shenzhen JiXinInteligence Co., Ltd All Rights Reserved

1.1 Appearance Dimensions

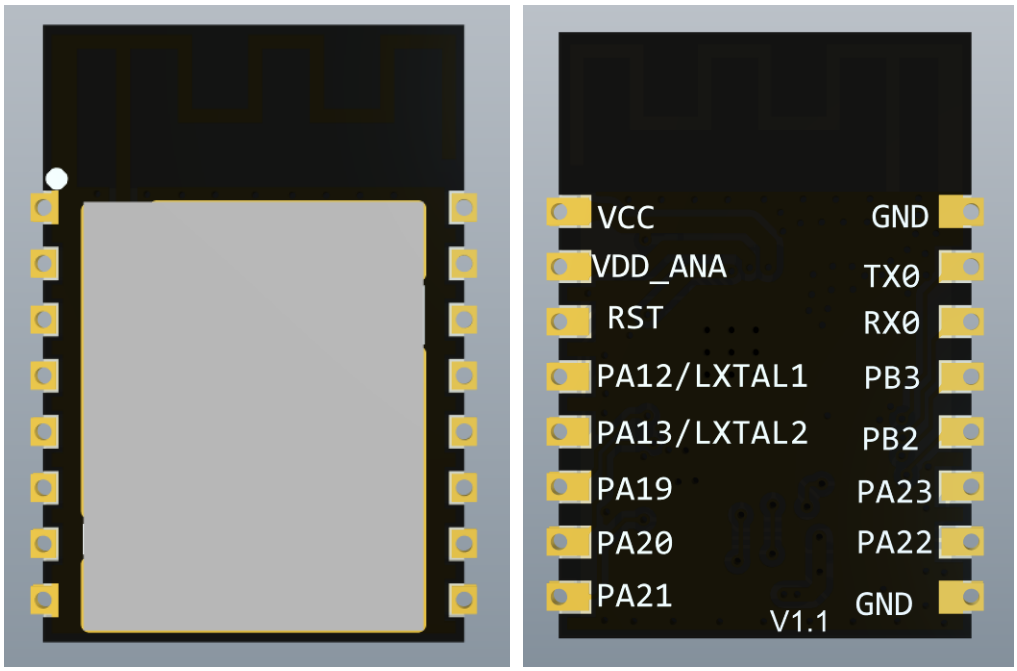

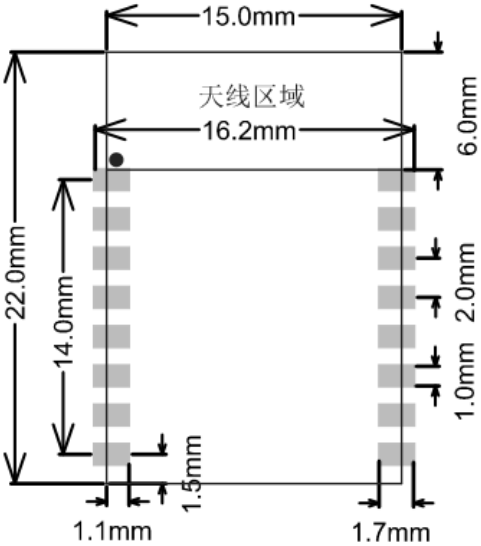

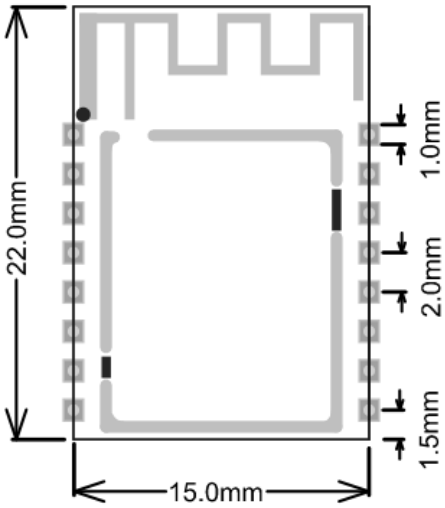

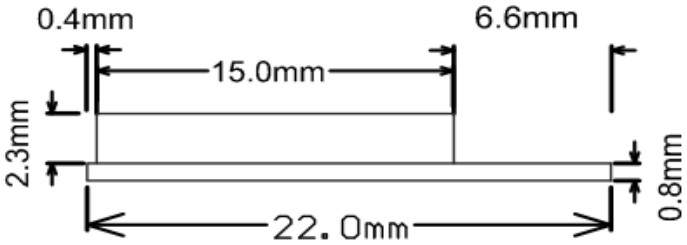

Copyright © 2019 Shenzhen JiXinInteligence Co., Ltd All Rights Reserved

1.2 Features

- EEE 802.11b/g/n, 1x1 SISO 2.4GHz
- Built-in ARM Cortex-M4F 32bit MCU with main frequency from 32KHz to 160MHz, support RTOS
- Built-in 256KB SRAM and 160KB ROM
- Support external Flash and eXecute In Place(XIP)
- 8 shared universal DMA channels
- Built-in 6 ways 12bit SAR type A/D converter
- Built-in Wi-Fi MAC/ BB/RF/PA/LNA
- Support WEP, WPA/WPA2, WPS2.0
- Support UART/GPIO/ADC/PWM/I2C/SPI interface
- Use SMD-16 assemble model
- Support multiple sleep modes and current as low as 4uA in deep sleep mode
- Support AES/DES/3DES/SHA/MD5/CRC encryption engine
- Support STA/AP/STA+AP operation modes
- Support Smart Config/AirKiss (WeChat)
- Support Local firmware upgrade using UART and remote upgrade（FOTA）
- Has universal and friendly AT command set
- Support secondary development, support Windows, Linux development environment

Copyright © 2019 Shenzhen JiXinInteligence Co., Ltd All Rights Reserved

1.3 Key parameter

Table 1.1 Description of the main parameters

Module model	XR-31B
Mounting	SMD16
Size(mm)	22*15*3(±0.2)
Cert.	FCC、CE、IC、REACH、RoHS
SPI Flash	32Mbit(default)
Interface	UART/GPIO/ADC/PWM/I2C /SPI
Number of GPIO	11
UART baud.	9600/19200/38400/115200/921600 bps
Freq.	2400 ~2483.5MHz
Antenna	Onboard PCB antenna
Tx Power	802.11b: 17±2 dBm (@11Mbps) 802.11g: 15±2 dBm (@54Mbps) 802.11n: 14±2 dBm (@HT20, MCS7)
Rx Sensitivity	CCK, 1 Mbps : -96dBm CCK, 11 Mbps: -91dBm 6 Mbps (1/2 BPSK): -91 dBm

Copyright © 2019 Shenzhen JiXinInteligence Co., Ltd All Rights Reserved

	54 Mbps (3/4 64-QAM): -75dBm HT20, MCS7 (65 Mbps, 72.2 Mbps): -73dBm
Power dissipation (Typical)	RX Active(MCU active, DC-DC mode):31mA TX Active(MCU active, DC-DC mode): 164mA@11n MCS7 14dBm 192mA@11b CCK 19dBm Standby: ~26.5uA Hibernation: ~4uA Shutdown: ~0.5uA
Security	WEP/WPA-PSK/WPA2-PSK/WPS2.0
Power Supply	DC 2.7V ~ 5.5V， Imax >300mA
Temperature	-40 ℃ ~ 85 ℃
Storage Condition	-55 ℃ ~ 150℃ ,< 90%RH

Copyright © 2019 Shenzhen JiXinInteligence Co., Ltd All Rights Reserved

2. Pin definition

XR-31B module has 16 pins, features are shown in Figure 2.1 and Table 2.2.

Figure 2.1 XR-31B Pin diagram

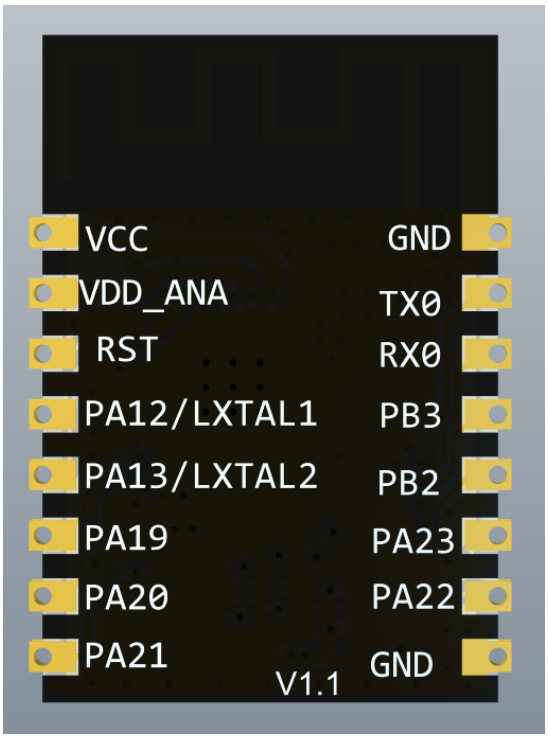

Table 2.2 Pin description

Number	Name	Function description
1	GND	ground
2	TX0	UART0_TX;JTAG_TMS; PWM4/ECT4; SWD_TMS; EINTB0
3	RX0	UART0_RX; JTAG_TCK; PWM5/ECT5; SWD_TCK; EINTB1
4	PB3	SWD_TCK; JTAG_TDI; PWM7/ECT7; EINTB3; download mode :pull-down, Run mode :do not handle or pull-up

Copyright © 2019 Shenzhen JiXinInteligence Co., Ltd All Rights Reserved

5	PB2	SWD_TMS; JTAG_TD0; PWM6/ECT6; EINTB2; download mode: pull-down, work mode: do not handle or pull-up
6	PA23	EXT_DCDC_PUP; WUPIO9(wake up IO); EINTA23; default cannot be high
7	PA22	UART2_TX; PWM3/ECT3; SPI1_CS0; WUPIO8; EINTA22
8	GND	ground
9	PA21	UART2_RX; PWM2/ECT2; SPI1_CLK; WUPIO7; EINTA21
10	PA20	UART2_CTS;TWI0_SDA;PWM1/ECT1;SPI1_MISO; WUPIO6; EINTA20
11	PA19	UART2_RTS;TWI0_SCL;PWM0/ECT0;SPI1_MOSI; WUPIO5; EINTA19
12	PA13	LXTAL2; ADC_CH3;PWM5/ECT5;UART1_TX;EINTA13
13	PA12	LXTAL1; ADC_CH2;PWM4/ECT4;IR_TX;EINTA12
14	RST	Reset
15	VDD_ANA	Voltage output 1.8V
16	VCC	power supply 2.7~5.5V

Copyright © 2019 Shenzhen JiXinInteligence Co., Ltd All Rights Reserved

Table 2.3 Start mode

mode	RST	PB2	PB3
Download	rising edge	low	low
Run	rising edge	low	high
		high	low
		high	high

Notice:PB2 and PB3 had beenpulled up in module,module has self-reset function

3. Electrical parameters

3.1 Electrical characteristics

parameter		test condition	min	typ	max	unit
Storage Temp.		-	-55	normal	150	℃
Work temp.		-	-40	20	85	℃
Max welding temp.		IPC/JEDEC J-STD-020	-	-	260	℃
Supply volt.		VCC	2.7	3.3/5	5.5	V
I/O	V_{IL}	VCC_IO=3.3V	-0.3	-	1.32	V
	V_{IH}	VCC_IO=3.3V	2.06	-	3.6	V

Copyright © 2019 Shenzhen JiXinInteligence Co., Ltd All Rights Reserved

	V_{OL}	VCC_IO=3.3V, |IOL|=7.5~50 mA	-0.3	-	0.4	V
	V_{OH}	VCC_IO=3.3V, |IOL|=7.5~50 mA	2.9	-	3.4	V
	I_{MAX}	-	-	-	12	mA

3.2 Wi-Fi RF characteristic

Description	**Min**	**Typ.**	**Max**	**Unit**
Frequency	2400	-	2483.5	MHz
Enter reflection value	-	-	-10	dB
Transmit Power				
CCK, 1 Mbps	17.20	17.72	-	dBm
CCK, 11Mbps	17.14	17.86	-	dBm
6 Mbps OFDM	15.73	16.12	-	dBm
54Mbps OFDM	15.02	15.96	-	dBm
HT20, MCS0	14.77	15.34	-	dBm
HT20, MCS7	14.28	15.11	-	dBm
EVM				
CCK, 1 Mbps	-19.86	-20.21	-	dB

Copyright © 2019 Shenzhen JiXinInteligence Co., Ltd All Rights Reserved

CCK, 11 Mbps	-20.70	-21.58	-	dB
6 Mbps OFDM	-19.82	-20.39	-	dB
54Mbps OFDM	-31.32	-31.81	-	dB
HT20, MCS0	-25.21	-25.93	-	dB
HT20, MCS7	-31.36	-32.03	-	dB
Receiver Sensitivity				
CCK, 1 Mbps	-	-96	-	dBm
CCK, 11 Mbps	-	-91	-	dBm
6 Mbps OFDM	-	-91	-	dBm
54 Mbps OFDM	-	-75	-	dBm
HT20, MCS0	-	-91	-	dBm
HT20, MCS7	-	-73	-	dBm

3.3 Power dissipation

XR808, 25℃, VCC=3.3V,VDD_ANA=1.8V, MCU 160MHz

Work mode	MCU state	WLAN state	TX/RX	Test condition		Min	Typ.	Max.	unit
ACTIVE	Active	Active	TX	1M DSSS	17dBm	-	217.0	-	mA
				11M CCK	17dBm	-	224.0	-	mA
				6M OFDM	16dBm	-	200.0	-	mA
				54M OFDM	16dBm	-	212.0	-	mA
				HT20,M	16dBm	-	209.0	-	mA

Copyright © 2019 Shenzhen JiXinInteligence Co., Ltd All Rights Reserved

				CS0					
				HT20,MCS7	15dBm	-	204.0	-	mA
			RX	1M DSSS		-	39.0	-	mA
				11M CCK		-	40.0	-	mA
				54M OFDM		-	46.0	-	mA
				HT20,MCS0		-	42.0	-	mA
				HT20,MCS7		-	49.0	-	mA
STANDBY	Sleep	Active	TX	1M DSSS,null frame	17dBm	-	217.0	-	mA
			RX	RX listen		-	40.5	-	mA
				1M DSSS		-	33.3	-	mA
		PS Mode	RX	DTIM1		-	1074.0	-	uA
				DTIM3		-	435.0	-	uA
				DTIM8		-	200.0	-	uA
				DTIM10		-	167.0	-	uA
		OFF	-	-		-	47.0	-	uA
HIBERNATION	OFF	OFF	-	-		-	3.5	-	uA
SHUTDOWN	OFF	OFF	-	-		-	0.5	-	uA

Notice:

- ACTIVE mode, the power dissipation value is tested in MCU and WLAN activing.
- STANDBY mode , MCU is in sleep, can be awakened by peripherals。 For example: When the system has no task for a long time and needs to be connected to the network, close most peripherals, retain the network communication capacity, and wake up the system for processing as soon as possible when the data is received.
- HIBERNATION mode retains only RTC, waiting for Timer or wake-up IO interrupt

Copyright © 2019 Shenzhen JiXinInteligence Co., Ltd All Rights Reserved

4. Reflow welding temperature curve

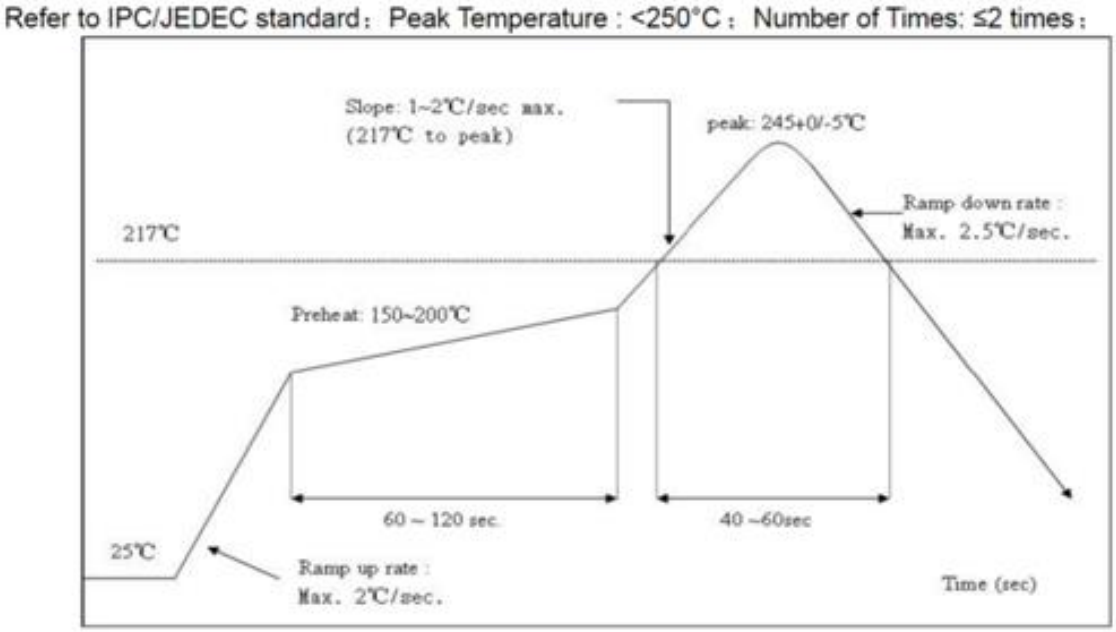

5. Application circuit

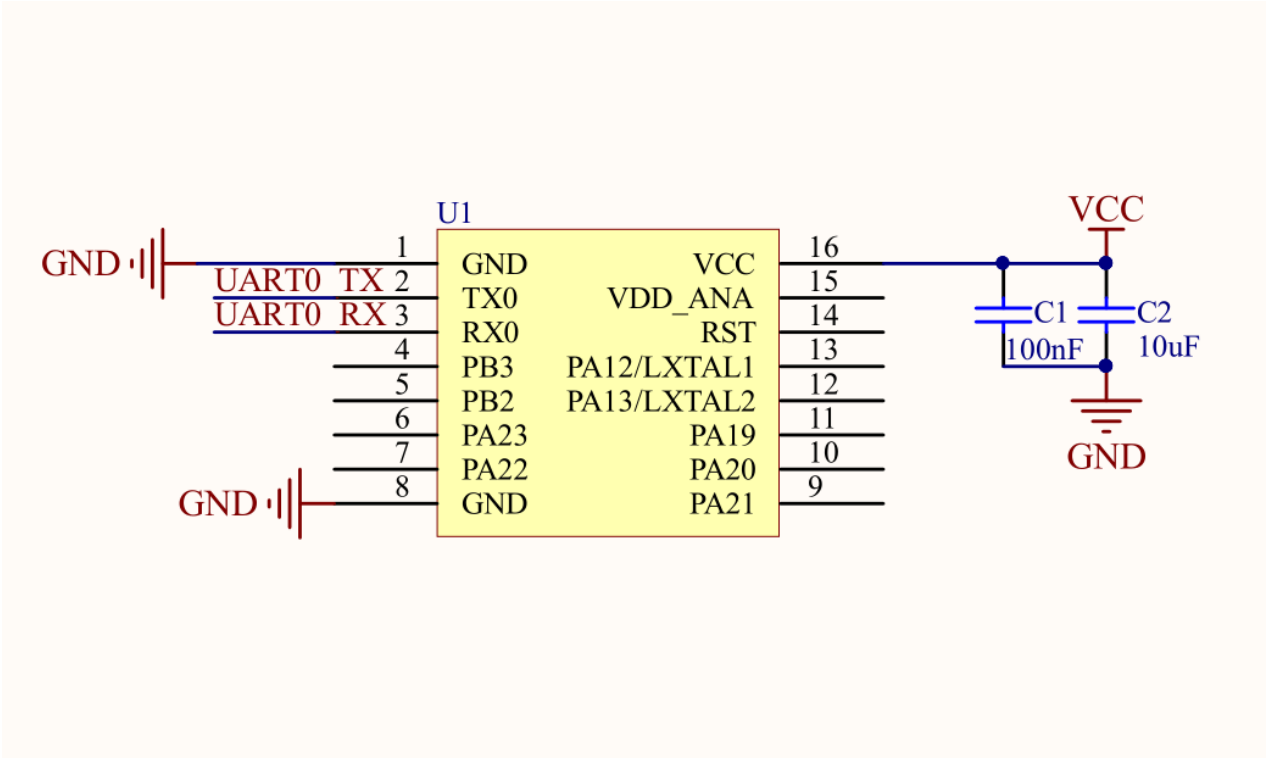

Copyright © 2019 Shenzhen JiXinInteligence Co., Ltd All Rights Reserved

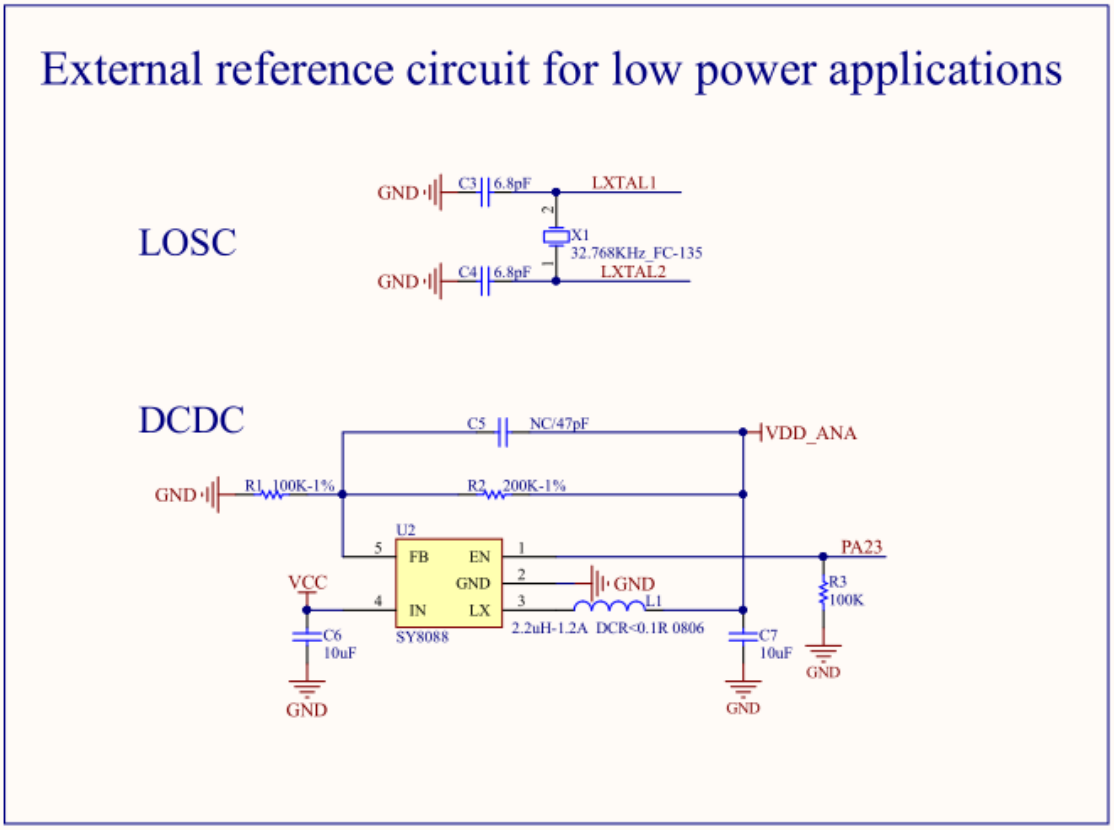

6. Contact Us

Address: A505 Room,Business Building,Suojia Science Park,Xixiang,Baoan District,Shenzhen

Telephone: 0755-23220940

Website: www.aimachip.com

Copyright © 2019 Shenzhen JiXinInteligence Co., Ltd All Rights Reserved