XR-50B User manual

Version V1

Copyright ©2019

Copyright © 2019 ShenzhenJiXinInteligence Co., Ltd All Rights Reserved

This device is intended only for OEM integrators under the following conditions:

1) The antenna must be installed such that 20 cm is maintained between the antenna and users, and

2) This device and its antenna(s) must not be co‐located with any other transmitters except in accordance with FCC multi‐transmitter product procedures. Referring to the multi‐transmitter policy, multiple‐transmitter(s) and module(s) can be operated simultaneously without C2P.

3) For all products market in US, OEM has to limit the operation channels in CH1 to CH11 for 2.4G band by supplied firmware programming tool. OEM shall not supply any tool or info to the end‐user regarding to Regulatory Domain change.

USERS MANUAL OF THE END PRODUCT:

In the users manual of the end product, the end user has to be informed to keep at least 20cm separation with the antenna while this end product is installed and operated. The end user has to be informed that the FCC radio-frequency exposure guidelines for an uncontrolled environment can be satisfied.

The end user has to also be informed that any changes or modifications not expressly approved by the manufacturer could void the user's authority to operate this equipment. If the size of the end product is smaller than 8x10cm, then additional FCC part 15.19 statement is required to be available in the users manual:

This device complies with Part 15 of FCC rules. Operation is subject to the following two conditions: (1) this device may not cause harmful interference and (2) this device must accept any interference received, including interference that may cause undesired operation.

LABEL OF THE END PRODUCT:

The final end product must be labeled in a visible area with the following " Contains FCC ID: 2AVTT-XR50B ". If the size of the end product is larger than 8x10cm, then the following FCC part 15.19 statement has to also be available on the label:

This device complies with Part 15 of FCC rules. Operation is subject to the following two conditions: (1) this device may not cause harmful interference and (2) this device must accept any interference received, including interference that may cause undesired operation.

Labels: Host Device must contain the following label on the outside of the unit:

Contains FCC ID: 2AVTT-XR50B

Installation Guidance

The final host / module combination may also need to be evaluated against the FCC Part 15B criteria for unintentional radiators in order to be properly authorized for operation as a Part 15 digital device. The user’s manual or instruction manual for an intentional or unintentional radiator shall caution the user that changes or modifications not expressly approved by the party responsible for compliance could void the user's authority to operate the equipment. In cases where the manual is provided only in a form other than paper, such as on a computer disk or over the Internet, the information required by this section may be included in the manual in that alternative form, provided the user can reasonably be expected to have the capability to access information in that form.

To ensure compliance with all non-transmitter functions the host manufacturer is responsible for ensuring compliance with the module(s) installed and fully operational. For example, if a host was previously authorized as an unintentional radiator under the Declaration of Conformity procedure without a transmitter certified module and a module is added, the host manufacturer is responsible for ensuring that the after the module is installed and operational the host continues to be compliant with the Part 15B unintentional radiator requirements.

The FCC rule/s for this module are CFR 47 Part 15 Subpart C.

Additional testing and certification may be necessary when multiple modules are used.

Copyright © 2019 ShenzhenJiXinInteligence Co., Ltd All Rights Reserved

1、Product Overview

The XR-50B WiFi module was developed to meet the IOT application of speech recognition, consisting of the core processor XR872, AC107 audio CODEC , power supply and auxiliary circuit. The XR872 integrates ARM-M4F MCU and high-capacity SRAM in a smaller package with operating frequency up to 384MHz. The XR872 is a highly integrated low-power Wi-Fi microcontroller SoC that integrates Wi-Fi MAC/BB/RF/PA/LNA, high-performance and highly integrated MCUs, enabling software to perform more complex tasks and support hardware encryption engines such as AES/DES/3DES/SHA/MD5/CRC to make data transmission more secure and faster. The new digital RF transmitter, designed with XRADIOTECH's MPDTM technology, provides higher output power and maintains higher efficiency, keeping the chip insensitive to antenna mismatches, but always has a good EVM under different VSWR. It also includes a number of peripherals, including UART, TWI, SPI, DMIC, Audio Codec, PWM, CIR (T/R), CSI, SDIO and Auxiliary ADC.

The XR-50B WiFi module supports the standard IEEE802.11 b/g/n protocol, RTOS, and has a complete TCP/IP protocol stack. Users can use the module to add networking capabilities to existing devices, or they can use it to build separate network controllers. Built-in high-speed buffer memory improves system performance and reduces memory requirements。

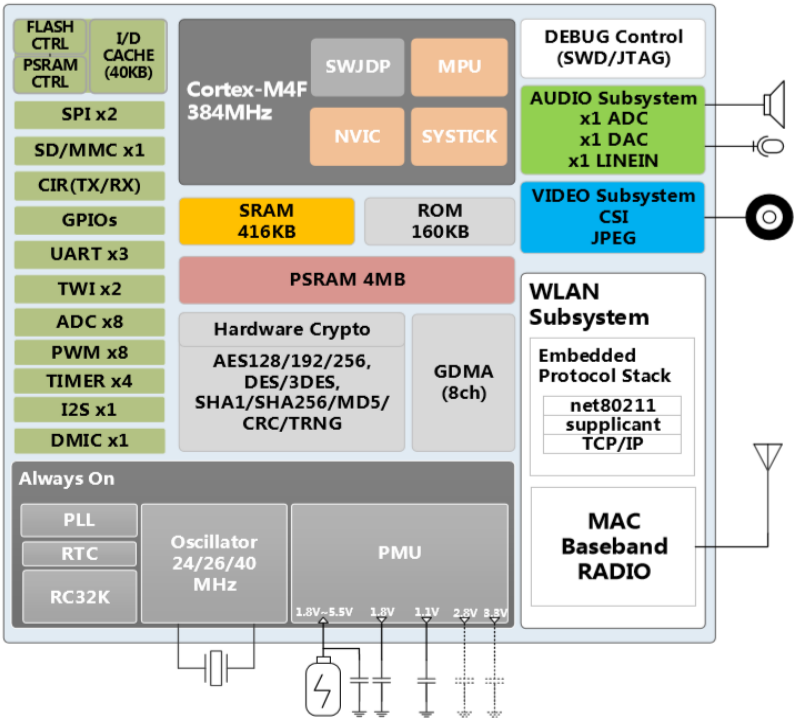

Copyright © 2019 ShenzhenJiXinInteligence Co., Ltd All Rights Reserved

1.1 Appearance dimensions

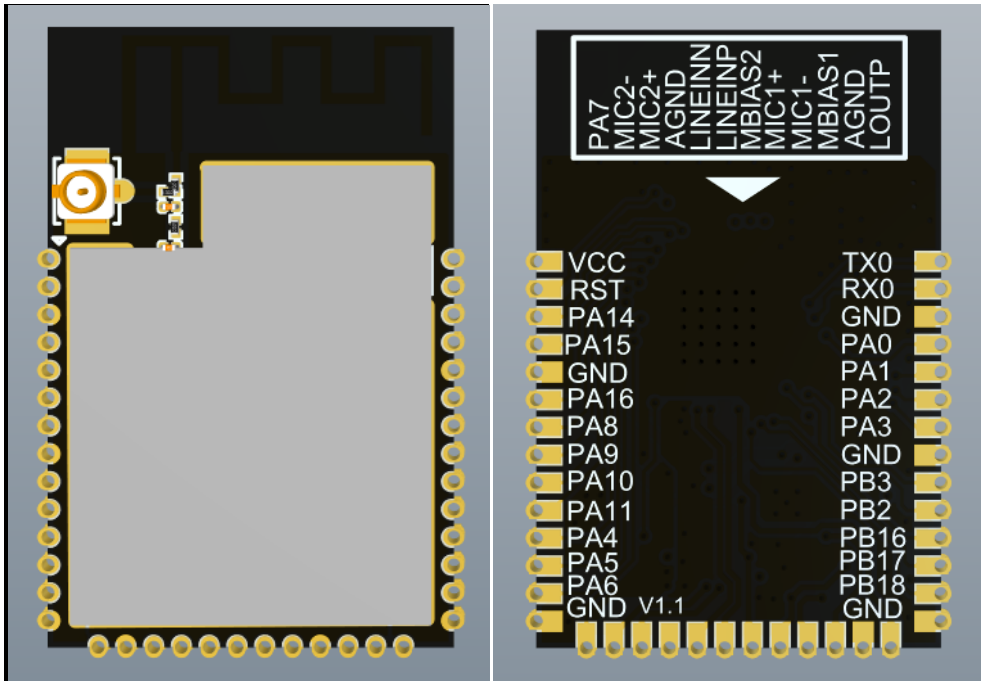

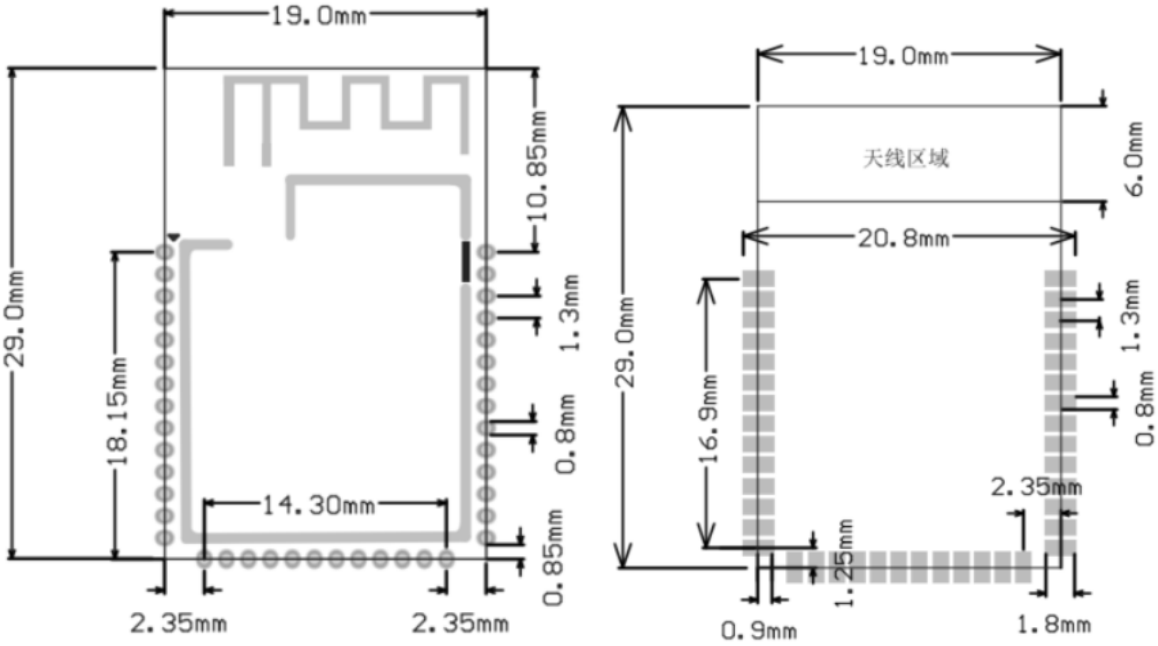

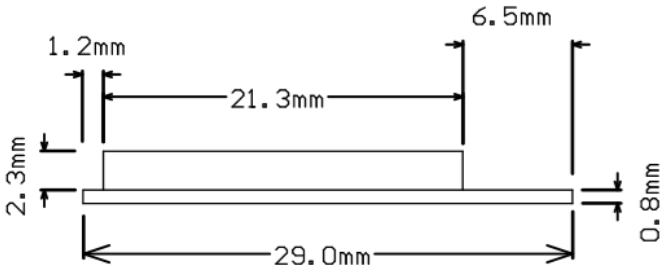

Copyright © 2019 ShenzhenJiXinInteligence Co., Ltd All Rights Reserved

1.2 Characteristic

- IEEE 802.11b/g/n, 1x1 SISO 2.4GHz
- Built-in ARM Cortex-M4F 32bit MCU with main frequency up to 384MHz, support RTOS
- Built-in 416KB SRAM , 160KB ROM and 4M PSRAM
- Support external Flash and eXecute In Place(XIP)
- 8 shared universal DMA channels
- Built-in 8-way 12bit resolution SAR type AD converter
- Integrated WiFi MAC/ BB/RF/PA/LNA
- Support WEP, WPA/WPA2, WPS2.0
- Support UART/GPIO/ADC/PWM/I2C/I2S interface
- Support AES/DES/3DES/SHA/MD5/CRC encryption engine
- Support STA/AP/STA+AP mode
- Support Smart Config/AirKiss（WeChat） One-click distribution network
- Support Local firmware upgrade using UART and remote upgrade （FOTA）
- Has universal and friendly AT command set
- Support secondary development, support Windows, Linux development environment
- On-board AC107 audio CODEC circuit, support for polar microphones

Copyright © 2019 ShenzhenJiXinInteligence Co., Ltd All Rights Reserved

- On-board DC/DC power supply module for lower power consumption

1.3 Key parameter

Table1.1 Description

Model	XR-50B
Package	SMD40
Size	29*19*3(±0.2)mm
Certification	FCC、CE、IC、REACH、RoHS
SPI Flash	32Mbit（default）
Interface	UART/GPIO/ADC/PWM/I2S/SPI/SDIO/DVP/PDM
IO	26
UART baud	9600/19200/38400/115200/921600 bps
Freq. range	2400~2483.5MHz
Antenna Type	Onboard/IPEX
TX power	802.11b: 17±2 dBm (@11Mbps) 802.11g: 15±2 dBm (@54Mbps) 802.11n: 14±2 dBm (@HT20, MCS7)

Copyright © 2019 ShenzhenJiXinInteligence Co., Ltd All Rights Reserved

RX sensitivity	CCK, 1 Mbps : -96dBm CCK, 11 Mbps: -91dBm 6 Mbps (1/2 BPSK): -91dBm 54 Mbps (3/4 64-QAM): -75dBm HT20, MCS7 (65 Mbps, 72.2 Mbps): -72dBm
Power dissipation (Typical)	RX Active(MCU active, DC-DC mode):44mA TX Active(MCU active, DC-DC mode): 196mA@11n MCS7 15dBm 227mA@11b CCK 17dBm Standby: ~43uA Hibernation: ~5uA Shutdown: ~0.5uA
Security	WEP/WPA-PSK/WPA2-PSK/WPS2.0
Power supply	2.7V ~ 5.5V， >600mA
Operating temp.	-40 ℃ ~ 85℃
Storage condition	-65 ℃ ~ 150℃ ,< 90%RH

Copyright © 2019 ShenzhenJiXinInteligence Co., Ltd All Rights Reserved

2、Pin definition

XR-50B has 40 pins，definitions are shown in Figure 2.1 and Table 2.2.

Figure 2.1 XR-50B Pin diagram

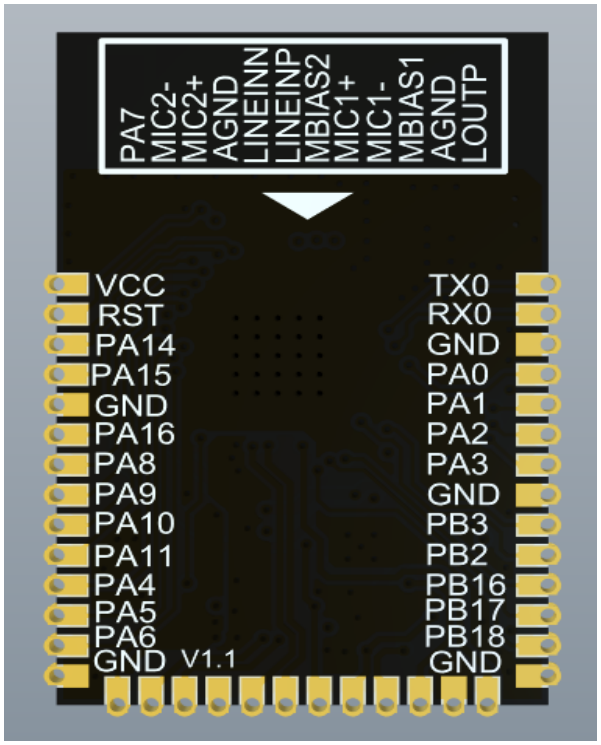

Table 2.2 Pin function description

Number	Name	Functions
1	TX0	UART0_TX； JTAG_TMS；PWM4/ECT4；SWD_TMS；EINTB0
2	RX0	UART0_RX；JTAG_TCK；PWM5/ECT5；SWD_TCK；EINTB1
3	GND	Ground
4	PA0	SPI1_MOSI ；SD_CMD； TWI1_SCL； CSI_D0；EINTA0
5	PA1	SPI1_MISO； SD_DATA0 ；TWI1_SDA； CSI_D1；EINTA1
6	PA2	SPI1_CLK ；SD_CLK ； CSI_D2； UART0_TX；EINTA2

Copyright © 2019 ShenzhenJiXinInteligence Co., Ltd All Rights Reserved

7	PA3	SPI1_CS0; SD_DATA1; CSI_D3; UART0_RX; EINTA3 PA18; TWI0_SDA; IR_TX; FEM_CTRL2; IR_RX; EINTA18
8	GND	Ground
9	PB3	SWD_TCK; JTAG_TDI; PWM7/ECT7 ;FLASH_HOLD/IO ; EINTB3
10	PB2	SWD_TMS; JTAG_TD0 ;PWM6/ECT6; FLASH_WP/IO2 ; EINTB2
11	PB16	SD_CMD;EINTB16
12	PB17	SD_DATA0;EINTB17
13	PB18	SD_CLK;EINTB18
14	GND	Ground
15	LOUTP	Audio DAC output p
16	AGND	Analog ground
17	MBIAS1	MIC1 Bias voltage output
18	MIC1-	MIC1-
19	MIC1+	MIC1+
20	MBIAS2	MIC2 Bias voltage output
21	LINEINP	line-in input p
22	LINEINN	line-in input n
23	AGND	Analog ground

Copyright © 2019 ShenzhenJiXinInteligence Co., Ltd All Rights Reserved

24	MIC2+	MIC2+
25	MIC2-	MIC2-
26	PA7	UART1_TX;SPI1_CS2;TWI0_SDA;CSI_D7;WUPIO3;EINTA7
27	GND	Ground
28	PA6	UART1_RX;SPI1_CS1;TWI0_SCL;CSI_D6;WUPIO2;EINTA6
29	PA5	UART1_CTS;SD_DATA3;TWI0_SDA;CSI_D5;WUPIO1;EINTA5
30	PA4	UART1_RTS;SD_DATA2;TWI0_SCL;CSI_D4;WUPIO0;EINTA7
31	PA11	ADC_CH1;PWM3/ECT3;DMIC_DATA;CSI_VSYNC;EINTA11
32	PA10	ADC_CH0;PWM2/ECT2;DMIC_CLK;CSI_HSYNC;EINTA10
33	PA9	FEM_CTRL2;PWM1/ECT1;TWI1_SDA;CSI_MCLK;EINTA9
34	PA8	FEM_CTRL1;PWM0/ECT0;TWI1_SCL;CSI_PCLK;EINTA8
35	PA16	ADC_CH6;IR_RX ;I2S_LRCLK;UART1_RTS;EINTA16
36	GND	Ground
37	PA15	ADC_CH5;PWM7/ECT7;I2S_DO; UART1_CTS;EINTA15
38	PA14	ADC_CH4 ; PWM6/ECT6 ; I2S_DI ; UART1_RX;EINTA14
39	RST	Reset
40	VCC	Power supply input，2.7~5.5V

Copyright © 2019 ShenzhenJiXinInteligence Co., Ltd All Rights Reserved

Table 2.3 Boot mode

mode	RST	PB2	PB3
download	Rising edge	Low	Low
operating	Rising edge	Low	High
		High	Low
		High	High

Notice: PB2 and PB3 has been pulled up in module, module has self-reset function

3. Electrical parameters

3.1 Characteristic

Item		Conditon	Min.	Typ.	Max	Unit
Storage temp.		-	-65	Noraml	150	℃
Operating temp.		-	-40	20	85	℃
Max. welding temp.		IPC/JEDEC J-STD-020	-	-	260	℃
Power supply		VCC	2.7	3.3/5	5.5	V
I/O	V_{IL}	VDD_IO=3.3V	-0.3	-	1.32	V
	V_{IH}	VDD_IO=3.3V	2.06	-	3.6	V

Copyright © 2019 ShenzhenJiXinInteligence Co., Ltd All Rights Reserved

	V_{OL}	VDD_IO=3.3V,|IOL|=7.5 ~50 mA	-0.3	-	0.4	V
	V_{OH}	VDD_IO=3.3V,|IOL|=7.5 ~50 mA	2.9	-	3.6	V

3.2WiFiRF Characteristic

VCC=3.3V, VDD_ANA =1.8V, XTAL=40MHz,温度=25℃

Item	**Min.**	**Typ.**	**Max.**	**Unit**
Frequency	2400	-	2483.5	MHz
Reflection value	-	-	-10	dB
Transmit Power				
CCK, 1 Mbps	17.05	17.34	-	dBm
CCK, 11.0 Mbps	16.62	17.07	-	dBm
6 Mbps OFDM	16.03	16.55	-	dBm
54Mbps OFDM	15.67	16.34	-	dBm
HT20, MCS0	14.34	15.88	-	dBm
HT20, MCS7	14.58	15.74	-	dBm

Copyright © 2019 ShenzhenJiXinInteligence Co., Ltd All Rights Reserved

EVM				
CCK, 1 Mbps	-19.78	-19.91	-	dB
CCK, 11.0 Mbps	-18.71	-19.12	-	dB
6 Mbps OFDM	-21.23	-21.77	-	dB
54Mbps OFDM	-21.35	-22.41	-	dB
HT20, MCS0	-28.17	-28.48	-	dB
HT20, MCS7	-28.86	-30.22	-	dB
Receiver sensitivity				
CCK, 1 Mbps	-	-96	-	dBm
CCK, 11 Mbps	-	-91	-	dBm
6 Mbps	-	-91	-	dBm
54 Mbps	-	-75	-	dBm
HT20, MCS0	-	-91	-	dBm
HT20, MCS7	-	-72	-	dBm

Copyright © 2019 ShenzhenJiXinInteligence Co., Ltd All Rights Reserved

3.3 Audio codec

VCC=3.3V, VDD_ANA=1.8V,temperature=25℃ ,ADC performance

Item	Conditon	Performance			
		Min.	Typ.	Max.	Unit
Full-Scale Input Level	PGAGain=0dB@THD<-40dB	-	1.75	-	Vrms
SNR (A-weighted)	PGA Gain=0dB	-	100	-	dB
THD+N (-3dBFS 1KHz input)		-	-90	-	dB
SNR (A-weighted)	PGA Gain=24dB	-	94	-	dB
THD+N (-3dBFS 1KHz input)		-	-91	-	dB
SNR (A-weighted)	PGA Gain=36dB	-	84	-	dB
THD+N (-3dBFS 1KHz input)		-	-81	-	dB

VCC=3.3V, VDD_ANA=1.8V, temperature=25℃ ,Line-in performance

Item	Condition	Performance			
		Min.	Typ.	Max.	Unit
Full-Scale Input Level	PGAGain=0dB@THD<-40dB	-	1.8	-	Vrms
SNR (A-weighted)	PGA Gain=0dB	-	99	-	dB

Copyright © 2019 ShenzhenJiXinInteligence Co., Ltd All Rights Reserved

THD+N (-3dBFS 1KHz input)		-	-89	-	dB
SNR (A-weighted)	PGA Gain=24dB	-	91	-	dB
THD+N (-3dBFS 1KHz input)		-	-69	-	dB

VCC=3.3V, VDD_ANA=1.8V, temperature=25℃ ,DAC performance

Item	Condition	Performance			
		Min.	Typ.	Max.	Unit
Full-Scale Output Level	RLoad=100K	-	0.856	-	Vrms
SNR (A-weighted)		-	99	-	dB
THD+N (-3dBFS 1KHz input)		-	-87	-	dB

3.4 Power dissipation

XR872, 25℃, VCC=3.3V,VDD_ANA=1.8V, MCU 384MHz

Mode	MCU State	WLAN State	TX/RX	Test condition		Min.	Typ.	Max.	Unit
ACTIVE	Active	Active	TX	1M DSSS	17dBm	-	217.0	-	mA
				11M CCK	17dBm	-	226.6	-	mA
				6M OFDM	16dBm	-	214.0	-	mA

Copyright © 2019 ShenzhenJiXinInteligence Co., Ltd All Rights Reserved

				54M OFDM	16dBm	-	218.0	-	mA
				HT20,MCS0	16dBm	-	201.3	-	mA
				HT20,MCS7	15dBm	-	196.0	-	mA
			RX	1M DSSS		-	40.0	-	mA
				11M CCK		-	42.0	-	mA
				54M OFDM		-	48.5	-	mA
				HT20,MCS0		-	48.3	-	mA
				HT20,MCS7		-	48.0	-	mA
STANDBY	Sleep	Active	TX	1M DSSS,null frame	17dBm	-	217.0	-	mA
			RX	RX listen		-	40.0	-	mA
				1M DSSS		-	32.5	-	mA
		PS Mode	RX	DTIM1		-	1031.0	-	uA
				DTIM3		-	428.0	-	uA
				DTIM8		-	186.0	-	uA
				DTIM10		-	154.0	-	uA
		OFF	-	-		-	43.0	-	uA
HIBERNATION	OFF	OFF	-	-		-	5.0	-	uA
SHUTDOWN	OFF	OFF	-	-		-	0.5	-	uA

Notice：

- ACTIVE mode， the power dissipation value is tested in MCU and WLAN activing.
- STANDBY mode , MCU is in sleep, can be awakened by peripherals。 For example: When the system has no task for a long time and needs to be connected to the network, close most peripherals, retain the network communication capacity, and wake up the system for processing as soon as possible when the data is received.
- HIBERNATION mode retains only RTC, waiting for Timer or wake-up IO interrupt

Copyright © 2019 ShenzhenJiXinInteligence Co., Ltd All Rights Reserved

4. Reflow welding temperature curve

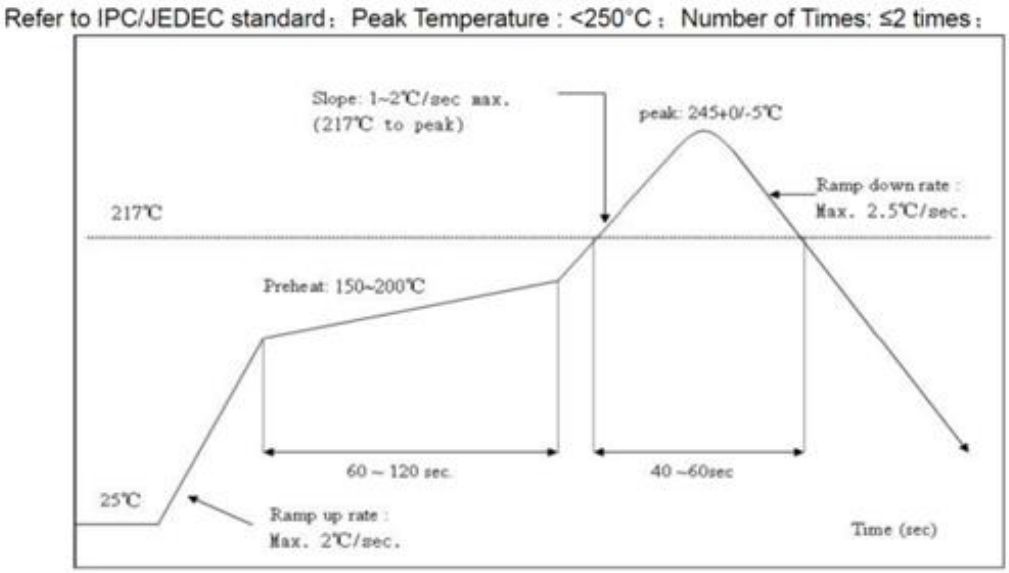

5. Typical application

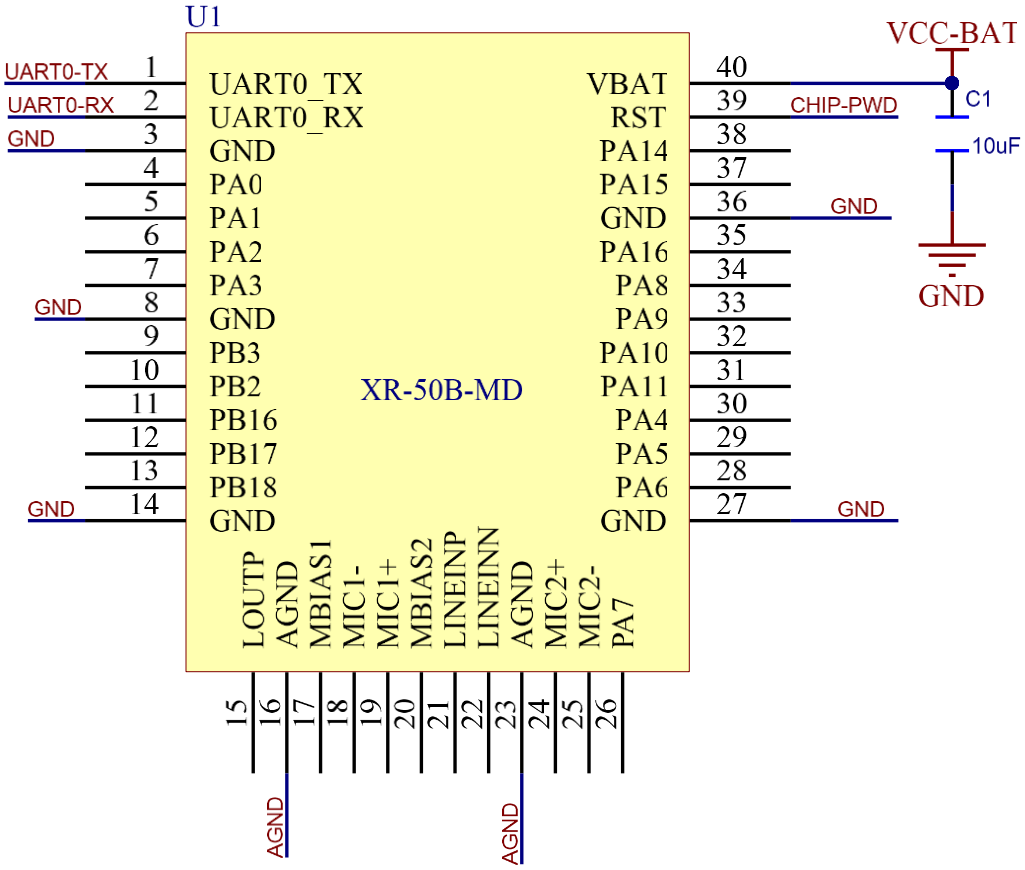

Copyright © 2019 ShenzhenJiXinInteligence Co., Ltd All Rights Reserved

6. Contact Us

Address：A505 Room,Business Building,Suojia Science Park,Xixiang,Baoan District,Shenzhen

Telephone：0755-23220940

Website：www.aimachip.com

Copyright © 2019 ShenzhenJiXinInteligence Co., Ltd All Rights Reserved