www.vava.com

E-mail
support@vava.com

Manufacturer:
Manufacturer: Shenzhen NearbyExpress Technology Development Co.,Ltd.
Address: Floor 7, Building E, Galaxy World Phase II, Shenzhen, China

EU Importer: ZBT International Trading GmbH
Address: Halstenbeker Weg 98C, 25462 Rellingen, Deutschland

Hiermit erklärt NearbyExpress, dass der Funkanlagentyp VA-IH006 der Richtlinie 2014/53/EU entspricht. Der vollständige Text der EU-Konformitätserklärung ist unter der folgenden Internetadresse verfügbar:
https://www.vava.com/pages/user-manual

MADE IN CHINA

Rev_1.6_EN-DE

Model: VA-IH006E (for camera)
VA-IH006F (for monitor)

VAVA Baby Monitor

User Guide

EN

CONTENTS

SAFETY INSTRUCTIONS 01
CAUTION 01
PACKAGE CONTENTS 02
PRODUCT DIAGRAM 03
GETTING STARTED 05
1. Charging & Powering Baby Monitor 05
2. Powering Camera 05
3. Pairing the Baby Monitor & the Camera 05
4. Placing the Camera 06
5. Wall Mounting Camera 06
6. Wide-Angle Lens (Optional) 07
FUNCTIONS & OPERATIONS 08
Monitor Interface Overview 08
1. Volume Adjustment 09
2. Display Brightness Adjustment 10
3. Talkback 10
4. Monitor Settings 10
5. Add / View / Delete a Camera 11
6. Digital Zoom & Circulating 11
7. Pan-n-Tilt 12
8. Night Vision 12
9. Alarm 12
10. Wide-angle Viewing (Optional) 12
11.Temperature Alert 12
SPECIFICATIONS 13
TROUBLESHOOTING 15
WARRANTY & CUSTOMER SERVICE 16
FCC STATEMENT 17
IC STATEMENT 19

SAFETY INSTRUCTIONS

· Keep cord out of the reach of children (more than 3ft / 0.9m away) in case of STRANGULATION.

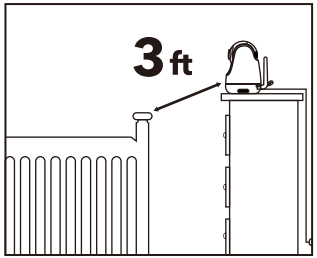

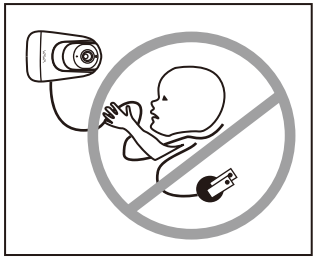

· NEVER place the camera or cord in or near the crib or playpen.
· NEVER mount the camera directly above the crib or playpen to avoid the risk of injury.
· Only use the AC adapters provided.
· Never use the unit near water, including near a bathtub, sink, laundry machine tube, wet basement, etc.
· Do not install near any heat sources such as radiators, heat registers, stoves, or other devices that produce heat.
· Only use attachments and accessories specified by the manufacturer.
· Unplug this device when unused for long periods of time.
· Do not insert anything into the upgrade pinholes. This operation is only intended for professionals.

CAUTION

· NOT toys. Do not allow children to play with them.
· The lens and lens hood are small parts, keep them out of your baby's reach at all times.
· This product is NOT intended to replace the proper supervision of children. You MUST check your child's activity regularly.
· This product is not intended for use as a medical camera and its use should not replace adult supervision.
· Unplug the product during lightning storms.
· Please check the operating range and condition of the camera carefully at the initial installation, and on a regular basis after that.
· Check the reception regularly. Test the camera before use and after changing the camera's location.
· For indoor use only.
· Clean the camera with a dry cloth only.
· Do not block any ventilation openings.
· Microphone feedback might occur when the monitor is too close to the camera. Please keep them at least 1.5m / 4.9ft apart.

PACKAGE CONTENTS

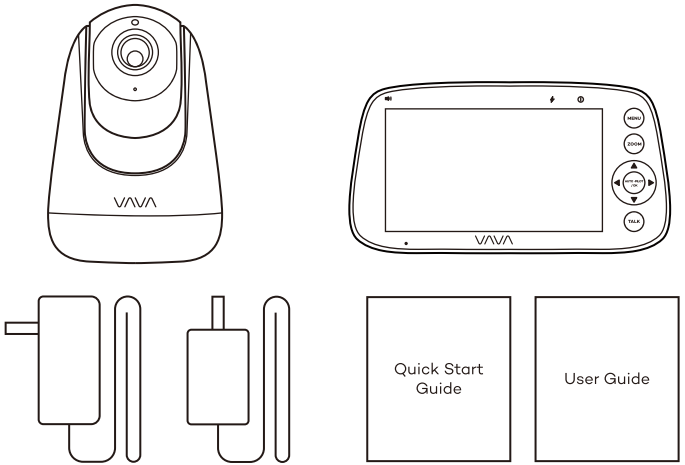

· Baby Monitor & Camera [Model: VA-IH006E (for camera), VA-IH006F (for monitor)]
· Monitor Adapter with USB-C Charging Cable
· Camera Adapter
· Micro-USB Charging Cable
· Quick Start Guide
· User Guide

PRODUCT DIAGRAM

Baby Monitor

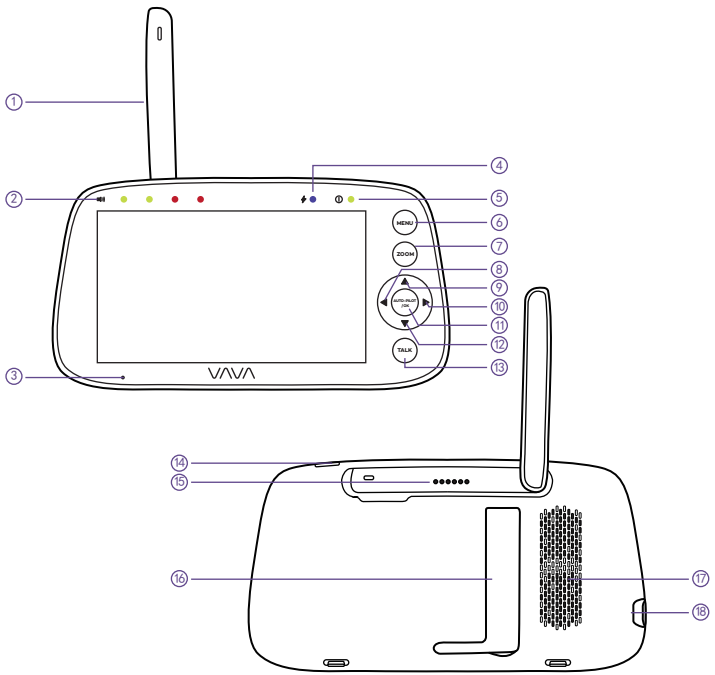

① Antenna
② Volume Indicators
③ Microphone
④ Charging Indicator
⑤ Power Indicator
⑥ Menu Button
⑦ Zoom Button
⑧ Left Button
⑨ Up Button
⑩ Right Button
⑪ OK Button
⑫ Down Button
⑬ Talk / Shortcut Button
⑭ Power Button
⑮ Upgrade Pinholes
⑯ Back Stand
⑰ Speaker
⑱ USB-C Port

Camera

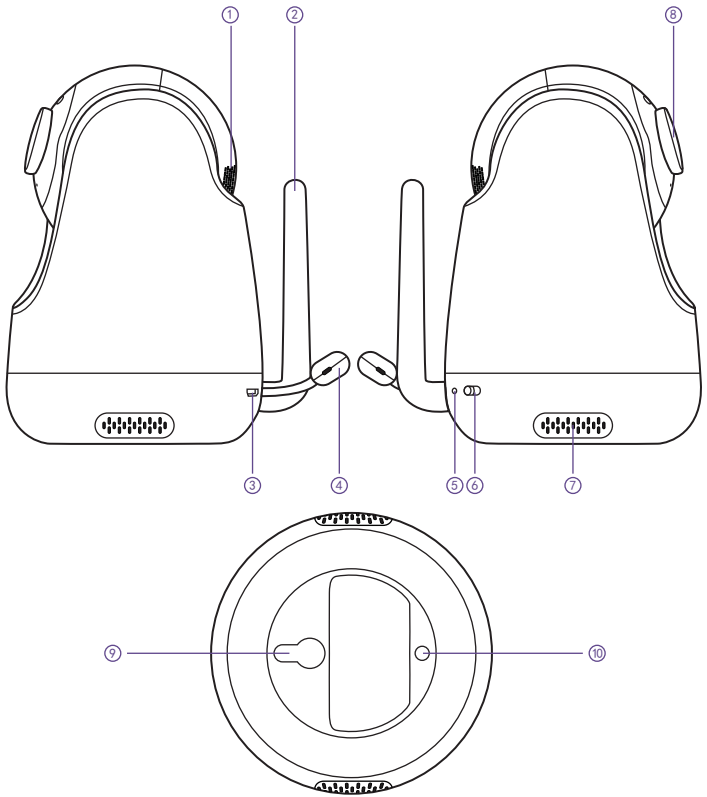

① Camera Vents
② Camera Antenna
③ Micro-USB Port
④ Temperature Sensor
⑤ Reset Pinhole
⑥ Power Switch
⑦ Speaker
⑧ Lens
⑨ Pairing Button
⑩ Mounting Hole

GETTING STARTED

1. Charging & Powering Baby Monitor

1) Connect the monitor adapter to the monitor and a power outlet.
2) Unplug the unit when its power indicator turns off, indicating a full charge.
3) Press the Power button on the monitor to power on with the power indicator lighting green.

2. Powering Camera

1) Connect the camera to power source via the Micro-USB cable and camera adapter.
2) Slide the Power Switch on camera to power on. Make sure the power indicator light is green.

- Only use the power adapters included in the package.
- Do not place the camera and power cord within the reach of your baby.

3. Pairing the Baby Monitor & the Camera

By default, one camera has been paired with the monitor when manufactured. When you power on the monitor and camera, the two will automatically pair. To add more cameras, press the Pair Button at the bottom of the camera, press Menu button, select through -> -> +, and then the monitor will auto-pair with the camera.

- Once they're paired successfully, the camera number with icon 1 will be shown at the top left.
- Microphone feedback might occur when the monitor is too close to the camera. Please keep them at least 1.5m / 4.9ft apart.
- It is recommended to pair in the baby's room, or wherever you intend to place the camera.

4. Placing the Camera

Place the camera 1.5-2m / 4.9-6.6ft away from your baby for safety reason and for a better view when in night vision mode.

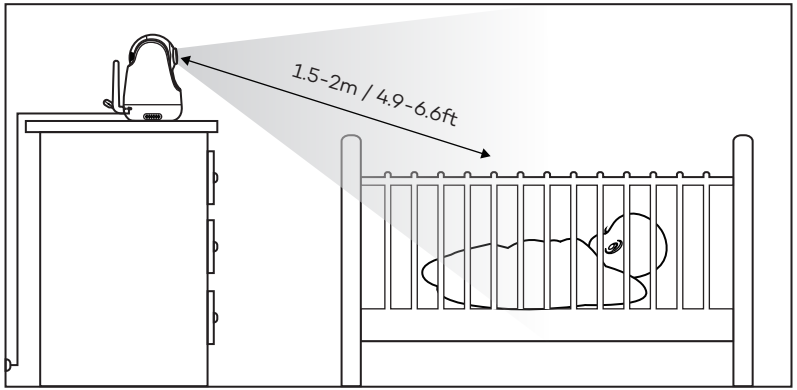

5. Wall Mounting Camera

1) Select the spot to mount the camera, keeping it beyond your baby's reach.
2) Insert the screw (not included) pre-installed on wall into the mounting hole of the camera.

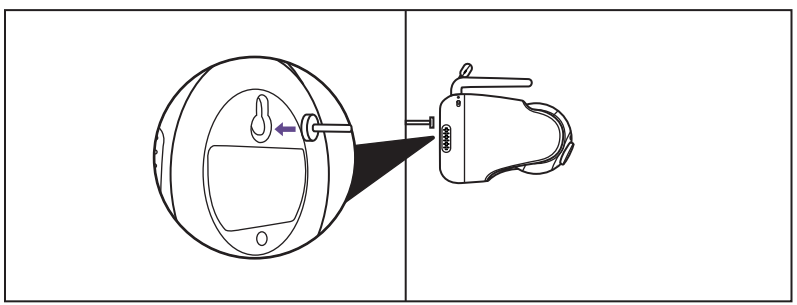

It's strongly recommended to use a screw and screw anchor. Don't release the camera until you're sure it is firmly mounted.

6. Wide-Angle Lens (Optional)

The aluminum lens hood (no special video effects) has been installed when the camera was manufactured.
To install wide-angle lens (sold separately), simply rotate the original lens hood counterclockwise to remove. Then install the new lens and rotate clockwise to fix in place.

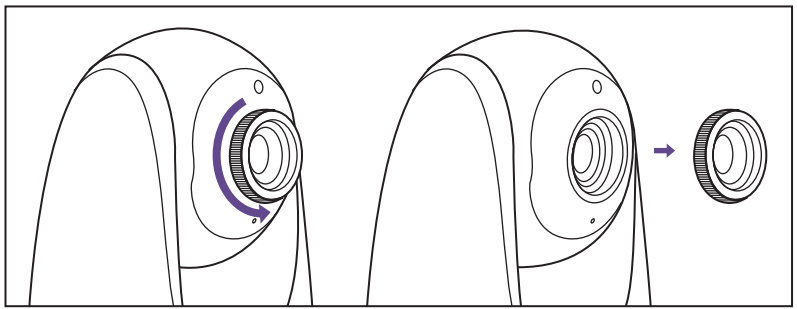

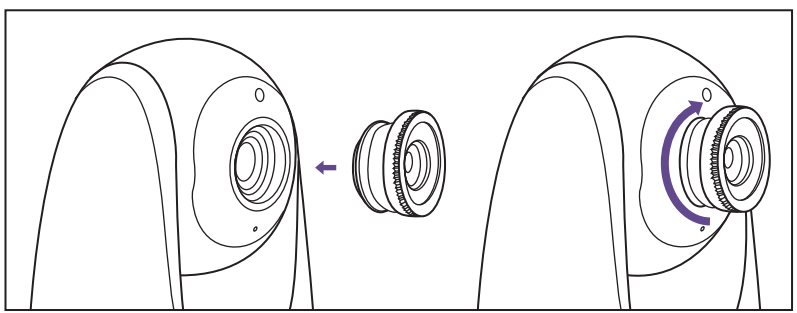

FUNCTIONS & OPERATIONS

Monitor Interface Overview

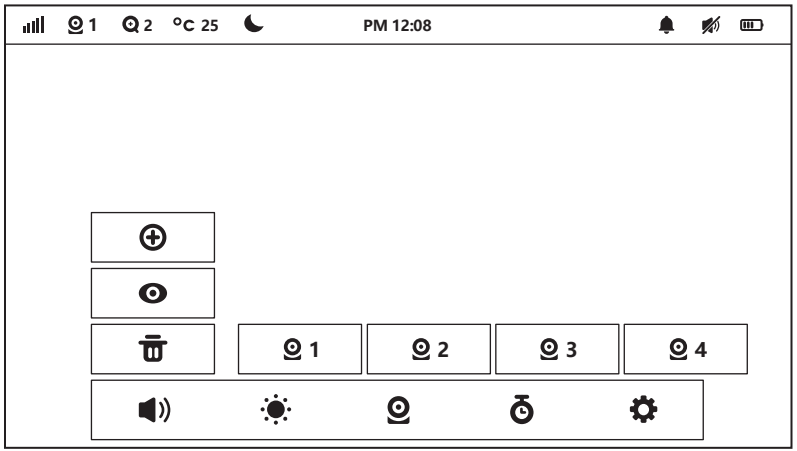

Top Status Indications

	Signal	4 levels
1	Current Camera	Camera 1 / Camera 2 / Camera 3/ Camera 4
2	Zoom	2X / 4X
°C	Current Temperature	°C / °F
	Night Vision	Auto ON in a dim environment
PM 12:08	Current Time	AM / PM
	Alarm	ON / OFF
	Mute	Mute all system sounds
	Talk-back	ON / OFF
	Battery	5 levels

Bottom Menu Brief

	Add Camera	Max. 4 cameras
	View Camera	Select to view each at a time
	Delete Camera	Select to delete cameras
	Speaker Volume	0-7 levels (mute when it's 0)
	Brightness	1-8 levels
	Camera	To add / view / delete cameras
	Alarm	OFF / 2Hr / 4Hr /6Hr / Set Time (hour / minute / AM, PM)
	Settings	Time System sound volume Temperature scale Auto-sleep time Restore to factory setting Customer service contacts

1. Volume Adjustment

1) Use Shortcut Button: Press Talk Button -> Left / Right Button to quickly adjust the volume with & icons.
2) Or you can press Menu Button -> OK Button -> Left / Right Button to volume down / up, and OK Button to saving your settings.

For system sound adjustment, please go to Monitor Settings -> System sound volume.

2. Display Brightness Adjustment

1) Use Shortcut Button: Press Talk Button -> Up / Down Button to quickly adjust the brightness with & icons.
2) Or you can press Menu Button -> OK Button -> Up / Down Button to turn up / down the brightness, and OK Button to saving your settings.

3. Talkback

1) Press Talk / Shortcut Button once to quickly adust the Volume or Brightness.
2) Press and hold Talk Button to talk to your baby, release it to exit the talking mode.

- When you enter the talking mode, the icon will be shown on the monitor.
- When it's mute or the speaker volume is too low, you may not be able to hear the baby.
- When you're pressing the Talk Button, the camera will not transfer the sound to the monitor. Please release the button to listen to your baby.

4. Monitor Settings

Press Menu Button, Left and Right Buttons, and then OK Button to set the monitor:

1) **Time setting**: Set the current time by setting hour, minute, and AM/ PM.
2) **System sound volume**: Select between Low, High, and Mute.
3) **Temperature scale**: Select between °C and °F.
4) **Screen auto-sleep time**: Select between 1min, 2min, 5min, and OFF.
5) **Restore to factory settings**: Press OK Button to confirm resetting; "Restoring factory settings" will be shown when restoring, and you can't press any button to control the device during this period. The monitor will auto restart when it's done.
6) **Customer service contacts**: Check the email, Tel. number, and address for customer service.

- To mute the sound during poor monitor-camera connection, please set the system sound volume to mute.
- When the monitor screen is under sleep mode, the power indicator flashes green slowly while the audio is still on; press any button to awake. You can also short press the Power Button to turn the screen off.
- Press and hold the Power Button to power on / off the monitor.

5. Add / View / Delete a Camera

1) Press Menu button, select through -> -> + to add a camera.
2) Select through -> to view a camera.
   - If there are 2 or more cameras, tap to cycle through the added cameras every 15 seconds.
   - Select the camera number (1/2/3/4) to view the corresponding camera.
3) Select through -> to delete a camera. At least one camera shall be added. Do not delete all the cameras. If necessary, please add a new camera before deletion.

You can switch viewing different cameras; the current camera number will be shown with the Camera icon on the monitor. You can only select one camera to view at one time.

6. Digital Zoom & Circulating

Press Zoom Button to zoom in to 2X / 4X when viewing the camera. A third pressing of the button will restore to the original image.
Press and hold OK Button 4 seconds to start auto circulating, press OK again to stop.

The current zoom level number will be shown with the Zoom icon 2 on the monitor

7. Pan-n-Tilt

When viewing the camera, press Left / Right / Up / Down Button to view at different angles, 108 degrees vertically and 270 degrees horizontally.

8. Night Vision

The night vision is automatically activated in a dim environment. The camera has 12 high-intensity infrared LEDs for picking up clear images in the dark. Black and white images can be captured within 2m distance.

9. Alarm

Press Menu Button -> Right Button to locate Alarm menu -> OK Button -> Up / Down Button to select the timer setting. You can set a 2Hr, 4Hr or 6Hr alarm, or set the hour and minute otherwise. When the alarm time is reached, a beep will be heard. Press OK Button to stop; otherwise it'll keep beeping for 30s, beeping again in 1min, stops after it's alerted 3 times.

- When the timer is set, the Alarm icon will be shown on the monitor.
- Before setting, please check that the monitor time is your current time.

10. Wide-angle Viewing (Optional)

Install your wide-angle lens (separately sold) referring to the previous mounting wide-angle lens section. Now you can view the camera in a wider angle of about 170 degrees.

11. Temperature Alert

The monitor will prompt too high (>35°C / 95°F) and too low (<0°C / 32°F) temperatures with the "HH" and "LL" icon, accompanied with a & icon and a beep alert.

When the monitor is mute, you may not be able to hear the baby.

SPECIFICATIONS

Monitor

Resolution	IPS (720 x 1280), PPI=296
Connectivity	2.4GHz
Image Aspect	16:9 (HD720)
Image Compression	h.264 (frame rate = 18fs)
Operating Range	280 - 300m (antenna vertically positioned at 90°)
Temperature Alert	Yes
Volume Control	8 levels
Brightness	8 levels
Antenna	Rotatable (max. 90 degree)
Power Input	5V / 2A (1.5m long USB C cable)
Zoom	Zoom In (2X) Zoom In (4X) Auto-Pilot (2 Cycle)
Two-Way Talk	Yes
Multi-Camera	Max. 4 cameras
Storage Temperature	-10°C ~ 55°C / 14 - 131°F
Operation Temperature	0°C ~ 40°C / 32 - 104 °F

Camera

Cmos	720p(1280x720), 1.0M, 1/4"
Connectivity	2.4GHz
Image Compression	h.264 (frame rate = 18fs)
Power Input	5V / 1.2A, 2m-long Micro-USB cable
Pan-n-Tilt	108 degrees vertical (Up=90, Down=18) 270 degrees horizontal (Left=135, Right=135)
Zoom	Zoom In (2X) Zoom In (4X) Auto-Pilot (2 Cycle)
View Angle	Vertical: 1.5m, Horizontal: 1.4m
Depth of Field	1.5m to 6m
Night Vision	Black & White image, 2m clear range, up to 6m
IR LED	Non-visible IR LED with wavelength 940nm (x 12 pcs)
Light Sensor	Yes
Two-Way Talk	Yes
Storage Temperature	-10°C ~ 55°C / 14 - 131°F
Operation Temperature	0°C ~ 40°C / 32 - 104 °F

TROUBLESHOOTING

Product not powering on?	· Check that the camera and monitor are turned on. · Check the camera is connected to power properly (it cannot be charged; it's power off once disconnected from power). · Check that the monitor is of enough battery (it'll auto shut off when battery level icon flashes red slowly on the monitor). · Check the intactness of the power cable.
Baby monitor can't connect with the camera?	· Check whether the camera is near the monitor (recommended to keep within 1.5-2m / 4.9-6.6ft). · Check whether the monitor is of low battery. Charge it in time to restore good connection. · Check whether the camera is well connected to power. · Check whether there are any large metallic objects including doors, refrigerators, mirrors, etc., are placed between the camera and monitor thus blocking the radio signals. · Check whether there's any other 2.4GHz product is used nearby like WiFi routers, microwave ovens, which may interfere the connection. · If nothing above is involved, please retry to pair: press the Pair Button at the bottom of the camera, press Menu button, select through -> -> + , and then the monitor will auto-pair with the camera.
Nothing shown when I view a camera?	· Check all connections to the camera (power cable plugging and pairing). · Check whether the screen is in sleep mode. Press any button to awake it. · Check whether the camera is within range of the monitor. · Adjust the monitor antenna to vertical position for better signal transfer.
No sound from the monitor?	Check whether the system sound volume is set to "0". It'll be mute if set so.
Black and white pictures?	Night vision LED may be ON. Please turn on room lights to force it out of the night mode.
Choppy videos?	· Check whether the camera is near the monitor and that there're no obstacles between them. · Adjust the monitor antenna to vertical position for better signal transfer.
Too much noise?	· Volume may be set too high. Press Menu Button -> OK Button -> Left Button to volume down. · The camera and monitor may be put too close; keep them at least 1.5m / 4.9ft apart. · The camera may be too out of range. Please keep it within 10m / 32.8ft to the monitor.
Software Version?	Press the Power button on the monitor to turn off the monitor. The software version will be displayed at the screen bottom before power off.

WARRANTY & CUSTOMER SERVICE

12 months warranty
Lifetime customer service (contacts on the monitor, and back cover of this User Guide)

FCC STATEMENT

FCC RF Exposure Warning Statements for Camera:
This equipment complies with FCC radiation exposure limits set forth for an uncontrolled environment. This equipment shall be installed and operated with minimum distance 20cm between the radiator & body.

ISED Radio Frequency Exposure Statement for Camera:
This equipment complies with IC exposure limits set forth for an uncontrolled environment. This equipment shall be installed and operated with minimum distance 20cm between the radiator & body.

Cet équipement est conforme aux limites d'exposition IC définies pour un environnement non contrôlé. Cet équipement doit être installé et utilisé avec une distance minimale de 20 cm entre le radiateur et la carrosserie.

Changes or modifications not expressly approved by the party responsible for compliance could void the user's authority to operate the equipment.

This device complies with Part 15 of the FCC Rules. Operation is subject to the following two conditions:
(1) this device may not cause harmful interference, and (2) this device must accept any interference received, including interference that may cause undesired operation.

RF Exposure Information:
FCC RF Exposure requirements: The highest SAR value reported under this standard during product certification for use next to the head with the minimum separation distance of 0mm. This transmitter must not be collocated or operating in conjunction with any other antenna or transmitter.
This product is compliance to FCC RF Exposure requirements and refers to FCC website https://apps.fcc.gov/oetcf/eas/reports/GenericSearch.cfm search for FCC ID: 2AVUHVA-IH006A and FCC ID: 2AVUHVA-IH006B
This device contains licence-exempt transmitter(s)/receiver(s) that comply with Innovation, Science and Economic Development Canada's licence-exempt RSS(s). Operation is subject to the following two conditions:
(1) This device may not cause interference.
(2) This device must accept any interference, including interference that may cause undesired operation of the device.

L'émetteur/récepteur exempt de licence contenu dans le présent appareil est conforme aux CNR d'Innovation, Sciences et Développement économique Canada applicables aux appareils radio exempts de licence. L'exploitation est autorisée aux deux conditions suivantes :

(1) L' appareil ne doit pas produire de brouillage;
(2) L' appareil doit accepter tout brouillage radioélectrique subi, même si le brouillage est susceptible d' en compromettre le fonctionnement.

for monitor:

This EUT is compliance with SAR for general population/uncontrolled exposure limits in IC RSS-102 and had been tested in accordance with the measurement methods and procedures specified in IEEE 1528 and IEC 62209. This equipment should be installed and operated with minimum distance 0 mm between the radiator and your body. This device and its antenna(s) must not be co-located or operating in conjunction with any other antenna or transmitter.

Cet appareil est conforme aux limites d'exposition DAS incontrôlée pour la population générale de la norme CNR-102 d'Industrie Canada et a été testé en conformité avec les méthodes de mesure et procédures spécifiées dans IEEE 1528 et IEC 62209. Cet appareil doit être installé et utilisé avec une distance minimale de 0 mm entre i'émetteur et votre corps.
Cet appareil et sa ou ses antennes ne doivent pas être co-localisés ou fonctionner en conjonction avec tout autre antenne ou transmetteur.