TEST REPORT

Product Name	:	eHandle
Model Number	:	EH01, EH02
FCC ID	:	2AVVS-EH01

Prepared for	:	CIS GLOBAL L L C
Address	:	1791 W DAIRY PL SUITE 185 TUCSON AZ 85705 UNITED STATES
Prepared by	:	EMTEK (SHENZHEN) CO., LTD.
Address	:	Building 69, Majialong Industry Zone, Nanshan District, Shenzhen, Guangdong, China Tel: (0755) 26954280 Fax: (0755) 26954282

Report Number	:	ES191126024W
Date(s) of Tests	:	November 26, 2019 to April 10, 2020
Date of issue	:	April 13, 2020

Table of Contents

1 EUT TECHNICAL DESCRIPTION 5

2 SUMMARY OF TEST RESULT 6

3 TEST METHODOLOGY 7

3.1 GENERAL DESCRIPTION OF APPLIED STANDARDS 7
3.2 MEASUREMENT EQUIPMENT USED 7
3.3 DESCRIPTION OF TEST MODES 8

4 FACILITIES AND ACCREDITATIONS 9

4.1 FACILITIES 9
4.2 LABORATORY ACCREDITATIONS AND LISTINGS 9

5 TEST SYSTEM UNCERTAINTY 10

6 SETUP OF EQUIPMENT UNDER TEST 11

6.1 RADIO FREQUENCY TEST SETUP 1 11
6.2 RADIO FREQUENCY TEST SETUP 2 11
6.3 CONDUCTED EMISSION TEST SETUP 12
6.4 BLOCK DIAGRAM CONFIGURATION OF TEST SYSTEM 13
6.5 SUPPORT EQUIPMENT 13

7 TEST REQUIREMENTS 14

7.1 20DB BANDWIDTH 14
7.2 CONDUCTED EMISSION TEST 16
7.3 RADIATED SPURIOUS EMISSION 19

8 ANTENNA APPLICATION 25

TEST RESULT CERTIFICATION

Applicant:	CIS GLOBAL L L C 1791 W DAIRY PL SUITE 185 TUCSON AZ 85705 UNITED STATES
Manufacturer:	ASIA PACIFIC CIS (WUXI) CO., LTD. SHUOFANG PLANT B1 Building, No. 5 Feifeng Road, High-Tech Zone Wuxi City Jiangsu China
Product Description:	eHandle
Model Number:	EH01, EH02
Trademark:	enLOGIC

Measurement Procedure Used:

APPLICABLE STANDARDS	
STANDARD	**TEST RESULT**
FCC 47 CFR Part 2, Subpart J FCC 47 CFR Part 15, Subpart C	**PASS**

The above equipment was tested by EMTEK(SHENZHEN) CO., LTD. The test data, data evaluation, test procedures, and equipment configurations shown in this report were made in accordance with the procedures given in ANSI C63.10 (2013) and the energy emitted by the sample EUT tested as described in this report is in compliance with the requirements of FCC Rules Part 2 and Part 15.209.

The test results of this report relate only to the tested sample identified in this report

Date of Test : November 26, 2019 to April 10, 2020

Prepared by : Abel Wu
Abel Wu/Editor

Reviewer : Joe Xia
Joe Xia/Supervisor

EMTEK (SHENZHEN) CO., LTD. TESTING

Approved & Authorized Signer :
Lisa Wang/Manager

Modified History

Version	Report No.	Revision date	Summary
Ver.1.0	ES191126024W	\	Original Report

1 EUT TECHNICAL DESCRIPTION

Characteristics	Description
EUT Description:	eHandle
Model Number:	EH01, EH02 (Note: There are 10 openings on the surface of EH02 rotation handle for installing keys buttons, EH01 does not has this. EH02 use a PCBA board with a microprocessor and communication interface, EH01 does not has this. EH02 has 10 metal keys buttons on the rotation handle surface, EH01 does not has this. 3 metal pins installed in EH02 for motor and PCBA board communication, EH01 does not has this.. We prepared model EH02 foe EMC test.)
Modulation:	FSK
Operating Frequency Range(s):	125KHz
Number of Channels:	1 channel
Antenna Type /Gain:	Induction coil Antenna / -4.6 dBi
Radio SW/HW version:	HW: V1.3 SW: V1.1
Power supply:	☒DC supply: DC 5V from Power Adaptor
	☐Adapter supply:

Note: *for more details, please refer to the User's manual of the EUT.*

2 SUMMARY OF TEST RESULT

FCC Part Clause	Test Parameter	Verdict	Remark
2.1049	20dB Bandwidth	PASS	
15.209	Radiated Spurious Emissions	PASS	
15.207	Conducted Emission	PASS	
15.203	Antenna Requirement	PASS	

NOTE1: N/A (Not Applicable)
NOTE2: The report use radiated measurements in the restricted frequency bands. In addition, the radiated test is also performed to ensure the emissions emanating from the device cabinet also comply with the applicable limits.

RELATED SUBMITTAL(S) / GRANT(S):

This submittal(s) (test report) is intended for FCC ID: 2AVVS-EH01 filing to comply with Section 15.225 of the FCC Part 15, Subpart C Rules.

3 TEST METHODOLOGY

3.1 GENERAL DESCRIPTION OF APPLIED STANDARDS

According to its specifications, the EUT must comply with the requirements of the following standards:
FCC 47 CFR Part 2, Subpart J
FCC 47 CFR Part 15, Subpart C

3.2 MEASUREMENT EQUIPMENT USED

3.2.1 Conducted Emission Test Equipment

EQUIPMENT TYPE	MFR	MODEL NUMBER	SERIAL NUMBER	LASTCAL.	DUE CAL.
Test Receiver	Rohde & Schwarz	ESCI	26115-010-0027	May 18, 2019	May 17, 2020
L.I.S.N.	Rohde & Schwarz	ENV216	101161	May 18, 2019	May 17, 2020
50Ω Coaxial Switch	Anritsu	MP59B	6100175589	May 19, 2019	May 18, 2020
Voltage Probe	Rohde & Schwarz	ESH2-Z3	100122	May 19, 2019	May 18, 2020
Pulse Limiter	Rohde & Schwarz	ESH3-Z2	100006	May 18, 2019	May 17, 2020
I.S.N	Teseq GmbH	ISN T800	30327	May 19, 2019	May 18, 2020

3.2.2 Radiated Emission Test Equipment

EQUIPMENT TYPE	MFR	MODEL NUMBER	SERIAL NUMBER	LAST CAL.	DUE CAL.
EMI Test Receiver	Rohde & Schwarz	ESU	1302.6005.26	May 19, 2019	May 18, 2020
Pre-Amplifier	HP	8447F	2944A07999	May 18, 2019	May 17, 2020
Bilog Antenna	Schwarzbeck	VULB9163	142	May 18, 2019	May 17, 2020
Loop Antenna	ARA	PLA-1030/B	1029	May 18, 2019	May 17, 2020
Horn Antenna	Schwarzbeck	BBHA 9170	BBHA9170399	May 19, 2019	May 18, 2020
Horn Antenna	Schwarzbeck	BBHA 9120	D143	May 18, 2019	May 17, 2020
Cable	Schwarzbeck	AK9513	ACRX1	May 19, 2019	May 18, 2020
Cable	Rosenberger	N/A	FP2RX2	May 19, 2019	May 18, 2020
Cable	Schwarzbeck	AK9513	CRPX1	May 19, 2019	May 18, 2020
Cable	Schwarzbeck	AK9513	CRRX2	May 19, 2019	May 18, 2020

3.2.3 Radio Frequency Test Equipment

EQUIPMENT TYPE	MFR	MODEL NUMBER	SERIAL NUMBER	LASTCAL.	DUE CAL.
Spectrum Analyzer	Agilent	E4407B	88156318	May 19, 2019	May 18, 2020
Signal Analyzer	Agilent	N9010A	My53470879	May 19, 2019	May 18, 2020
Power meter	Anritsu	ML2495A	0824006	May 19, 2019	May 18, 2020
Power sensor	Anritsu	MA2411B	0738172	May 19, 2019	May 18, 2020

Remark: *Each piece of equipment is scheduled for calibration once a year.*

3.3 DESCRIPTION OF TEST MODES

The EUT has been tested under its typical operating condition.
The EUT configuration for testing is installed on RF field strength measurement to meet the Commissions requirement and operating in a manner which intends to maximize its emission characteristics in a continuous normal application.
The Transmitter was operated in the normal operating mode. The TX frequency was fixed which was for the purpose of the measurements.

Pre-defined engineering program for regulatory testing used to control the EUT for staying in continuous transmitting and receiving mode is programmed.

☒Frequency and Channel list:

Channel	Frequency (MHz)	Channel	Frequency (MHz)	Channel	Frequency (MHz)
1	0.125	/	/	/	/

☒Test Frequency and Channel list:

Channel	Frequency (MHz)	Channel	Frequency (MHz)	Channel	Frequency (MHz)
1	0.125	/	/	/	/

4 FACILITIES AND ACCREDITATIONS

4.1 FACILITIES

All measurement facilities used to collect the measurement data are located at

Building 69, Majialong Industry Zone District, Nanshan District, Shenzhen, China
The sites are constructed in conformance with the requirements of ANSI C63.7, ANSI C63.10 and CISPR Publication 22.

4.2 LABORATORY ACCREDITATIONS AND LISTINGS

Site Description		
EMC Lab.	:	Accredited by CNAS, 2013.10.29 The certificate is valid until 2016.10.28 The Laboratory has been assessed and proved to be in compliance with CNAS-CL01:2006 (identical to ISO/IEC 17025:2005) The Certificate Registration Number is L2291. Accredited by TUV Rheinland Shenzhen 2015.4 The Laboratory has been assessed according to the requirements ISO/IEC 17025. Accredited by FCC, August 06, 2018 The certificate is valid until August 07, 2020 Designation Number: CN1204 Test Firm Registration Number: 882943 Accredited by Industry Canada, November 09, 2018 The Conformity Assessment Body Identifier is CN0008.
Name of Firm	:	EMTEK (SHENZHEN) CO., LTD.
Site Location	:	Building 69, Majialong Industry Zone, Nanshan District, Shenzhen, Guangdong, China

5 TEST SYSTEM UNCERTAINTY

The following measurement uncertainty levels have been estimated for tests performed on the apparatus:

Parameter	Uncertainty
Radio Frequency	±1x10^-5
Conducted Emissions Test	±2.0dB
Radiated Emission Test	±2.0dB
Occupied Bandwidth Test	±1.0dB
All emission, radiated	±3dB
Temperature	±0.5℃
Humidity	±3%

Measurement Uncertainty for a level of Confidence of 95%

6 SETUP OF EQUIPMENT UNDER TEST

6.1 RADIO FREQUENCY TEST SETUP 1

The component's antenna ports(s) of the EUT are connected to the measurement instrument per an appropriate attenuator. The EUT is controlled by PC/software to emit the specified signals for the purpose of measurements.

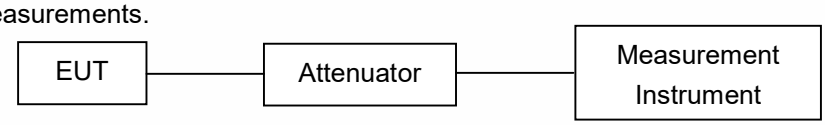

6.2 RADIO FREQUENCY TEST SETUP 2

The test site semi-anechoic chamber has met the requirement of NSA tolerance 4 dB according to the standards: ANSI C63.10. The test distance is 3m.The setup is according to the requirements in Section 13.1.4.1 of ANSI C63.10-2013 and CAN/CSA-CEI/IEC CISPR 22.

Below 30MHz：
The EUT is placed on a turntable 0.8 meters above the ground in the chamber, 3 meter away from the antenna (loop antenna). The Antenna should be positioned with its plane vertical at the specified distance from the EUT and rotated about its vertical axis for maximum response at each azimuth about the EUT. The center of the loop shall be 1 m above the ground. For certain applications, the loop antenna plane may also need to be positioned horizontally at the specified distance from the EUT.

Above 30MHz：
The EUT is placed on a turntable 0.8 meters above the ground in the chamber, 3 meter away from the antenna. The maximal emission value is acquired by adjusting the antenna height, polarisation and turntable azimuth. Normally, the height range of antenna is 1 m to 4 m, the azimuth range of turntable is 0° to 360°, and the receive antenna has two polarizations Vertical (V) and Horizontal (H).

(a) Radiated Emission Test Set-Up, Frequency Below 30MHz

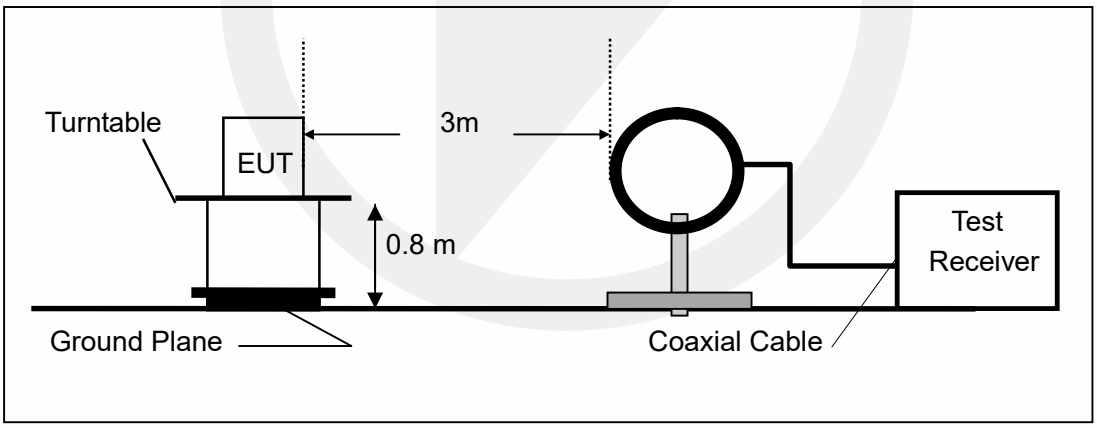

(b) Radiated Emission Test Set-Up, Frequency Below 1000MHz

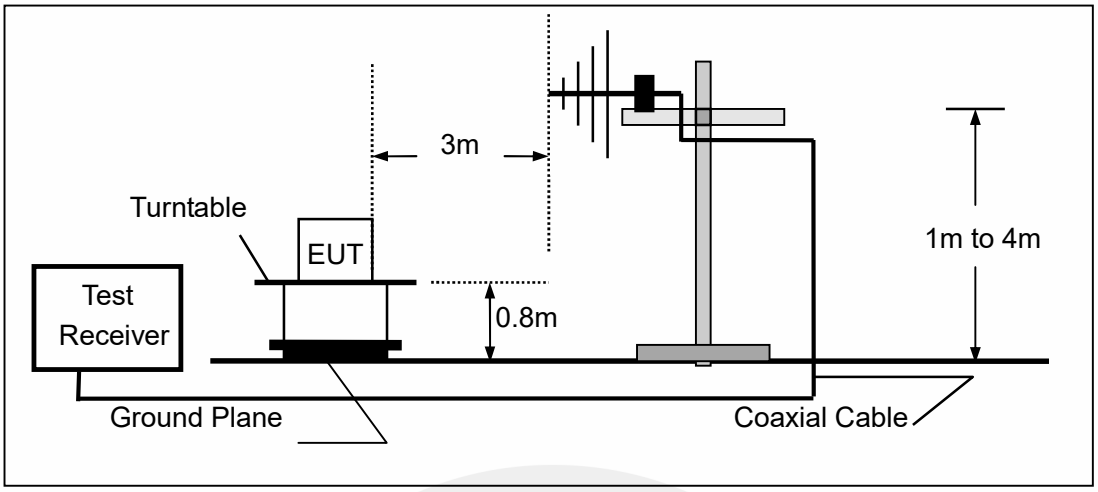

6.3 CONDUCTED EMISSION TEST SETUP

The mains cable of the EUT (maybe per AC/DC Adapter) must be connected to LISN. The LISN shall be placed 0.8 m from the boundary of EUT and bonded to a ground reference plane for LISN mounted on top of the ground reference plane. This distance is between the closest points of the LISN and the EUT. All other units of the EUT and associated equipment shall be at least 0.8m from the LISN.

Ground connections, where required for safety purposes, shall be connected to the reference ground point of the LISN and, where not otherwise provided or specified by the manufacturer, shall be of same length as the mains cable and run parallel to the mains connection at a separation distance of not more than 0.1 m.

According to the requirements in ANSI C63.10-2013 Conducted emissions from the EUT measured in the frequency range between 0.15 MHz and 30 MHz using CISPR Quasi-Peak and average detector mode.

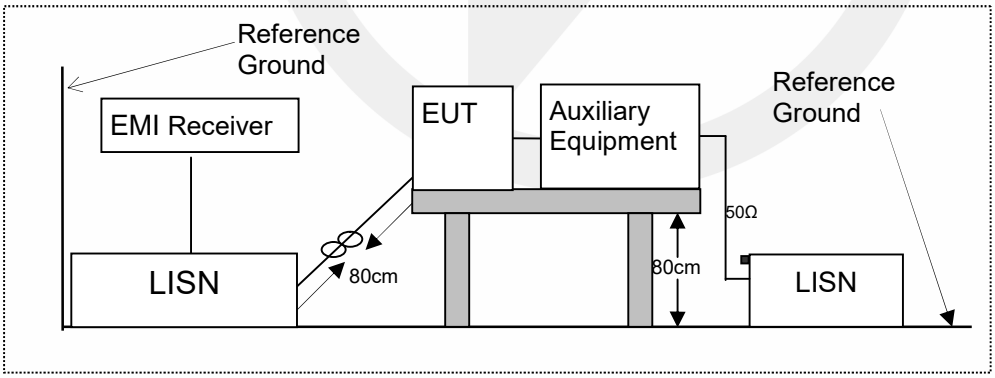

6.4 BLOCK DIAGRAM CONFIGURATION OF TEST SYSTEM

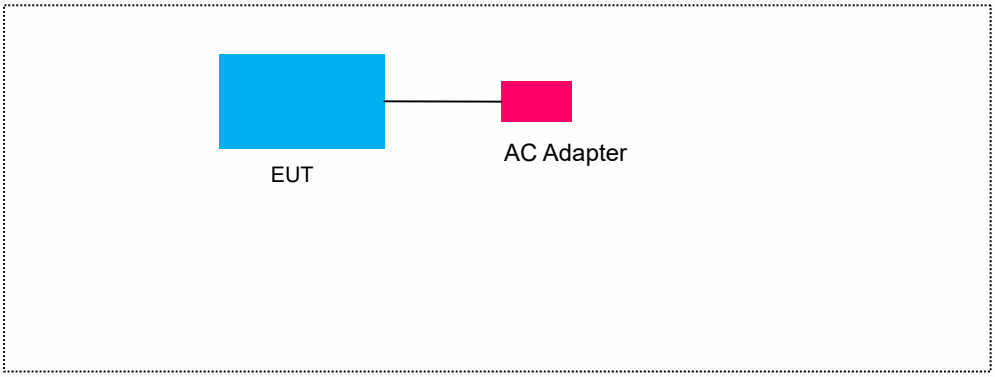

6.5 SUPPORT EQUIPMENT

Item	Equipment	Mfr/Brand	Model/Type No.	Note
1	Power Adaptor	WAHL	ETS-AD0105-U050200	N/A

Notes:

1. *All the equipment/cables were placed in the worst-case configuration to maximize the emission during the test.*
2. *Grounding was established in accordance with the manufacturer's requirements and conditions for the intended use.*

7 TEST REQUIREMENTS

7.1 20DB BANDWIDTH

7.1.1 Applicable Standard

According to FCC Part 2.1049

7.1.2 Conformance Limit

No limit requirement.

7.1.3 Test Configuration

Test according to clause 6.1 radio frequency test setup 1

7.1.4 Test Procedure

The EUT was operating in transmit mode and controlled its channel. Printed out the test result from the spectrum by hard copy function.
The RF output of EUT was connected to the spectrum analyzer by RF cable and attenuator. The path loss was compensated to the results for each measurement.
Set to the maximum power setting and enable the EUT transmit continuously
Set RBW = 1% occupied bandwidth (3 kHz).
Set the video bandwidth (VBW) =3 times RBW (10 kHz).
Set Span= approximately 2 to 4 times the occupied bandwidth
Set Detector = Peak.
Set Trace mode = max hold.
Set Sweep = auto couple.
The EUT should be transmitting at its maximum data rate. Allow the trace to stabilize. Use the marker-to-peak function to set the marker to the peak of the emission. Use the marker-delta function to measure 20dB down one side of the emission. Reset the markerdelta function, and move the marker to the other side of the emission, until it is (as close as possible to) even with the reference marker level. The marker-delta reading at this point is the 20dB bandwidth of the emission.
If this value varies with different modes of operation (e.g., data rate, modulation format, etc.), repeat this test for each variation.
Measure and record the results in the test report.

7.1.5 Test Results

Temperature :	28℃	Test By:	Andy
Humidity :	65 %		

Modulation Mode	Channel Number	Channel Frequency (MHz)	20dB Bandwidth (kHz)	Limit (kHz)	Verdict
FSK	1	0.125	2.752	N/A	PASS
Note: N/A (Not Applicable)					

Test Model	20dB Bandwidth Channel 0: 125KHz	FSK Modulation

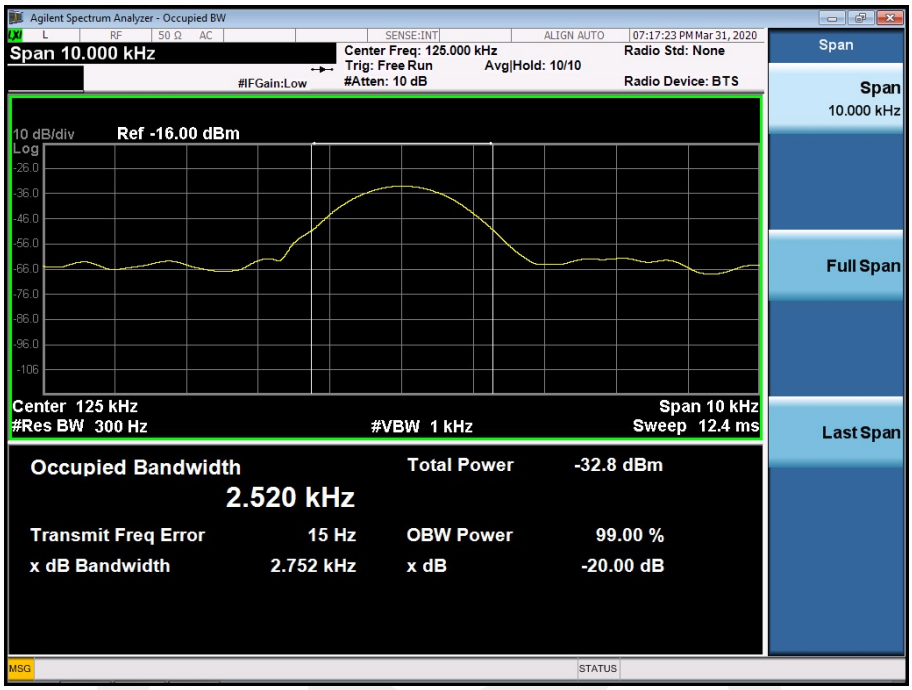

7.2 CONDUCTED EMISSION TEST

7.2.1 Applicable Standard

According to FCC Part 15.207(a)

7.2.2 Conformance Limit

Conducted Emission Limit		
Frequency(MHz)	Quasi-peak	Average
0.15-0.5	66-56	56-46
0.5-5.0	56	46
5.0-30.0	60	50

Note: 1. The lower limit shall apply at the transition frequencies
2. The limit decreases in line with the logarithm of the frequency in the range of 0.15 to 0.50MHz.

7.2.3 Test Configuration

Test according to clause 6.3 conducted emission test setup

7.2.4 Test Procedure

The EUT was placed on a table which is 0.8m above ground plane.
Maximum procedure was performed on the highest emissions to ensure EUT compliance.
Repeat above procedures until all frequency measured were complete.

7.2.5 Test Result

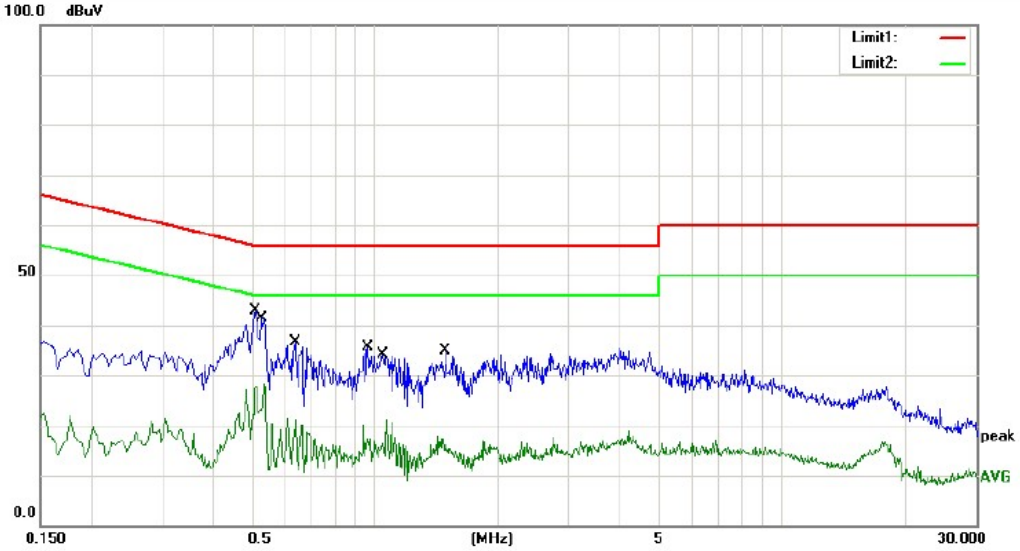

Site site #1 Phase: *L1* Temperature: 24

Limit: (CE)FCC PART 15.207_QP Power: AC 120V/60Hz Humidity: 50 %

Mode: 125KHz

Note:

No.	Mk.	Freq.	Reading Level	Correct Factor	Measure-ment	Limit	Over		
		MHz	dBuV	dB	dBuV	dBuV	dB	Detector	Comment
1	*	0.5100	32.60	10.07	42.67	56.00	-13.33	QP	
2		0.5100	17.50	10.07	27.57	46.00	-18.43	AVG	
3		0.5260	31.30	10.07	41.37	56.00	-14.63	QP	
4		0.5260	18.30	10.07	28.37	46.00	-17.63	AVG	
5		0.6340	26.50	10.05	36.55	56.00	-19.45	QP	
6		0.6340	10.90	10.05	20.95	46.00	-25.05	AVG	
7		0.9620	25.60	10.00	35.60	56.00	-20.40	QP	
8		0.9620	7.30	10.00	17.30	46.00	-28.70	AVG	
9		1.0460	24.00	10.00	34.00	56.00	-22.00	QP	
10		1.0460	6.30	10.00	16.30	46.00	-29.70	AVG	
11		1.4940	24.80	10.05	34.85	56.00	-21.15	QP	
12		1.4940	6.00	10.05	16.05	46.00	-29.95	AVG	

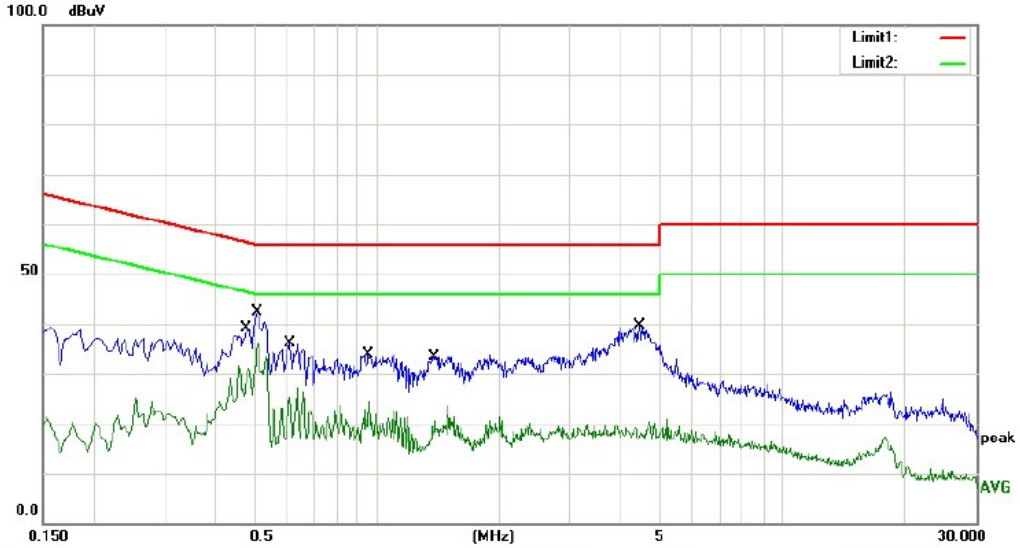

Site site #1 Phase: N Temperature: 24

Limit: (CE)FCC PART 15.207_QP Power: AC 120V/60Hz Humidity: 50 %

Mode: 125KHz

Note:

No.	Mk.	Freq.	Reading Level	Correct Factor	Measure-ment	Limit	Over		
		MHz	dBuV	dB	dBuV	dBuV	dB	Detector	Comment
1		0.4780	29.10	10.11	39.21	56.37	-17.16	QP	
2		0.4780	19.20	10.11	29.31	46.37	-17.06	AVG	
3		0.5100	32.20	10.10	42.30	56.00	-13.70	QP	
4	*	0.5100	25.90	10.10	36.00	46.00	-10.00	AVG	
5		0.6100	26.00	10.05	36.05	56.00	-19.95	QP	
6		0.6100	14.80	10.05	24.85	46.00	-21.15	AVG	
7		0.9580	24.10	9.88	33.98	56.00	-22.02	QP	
8		0.9580	9.80	9.88	19.68	46.00	-26.32	AVG	
9		1.3860	23.60	9.88	33.48	56.00	-22.52	QP	
10		1.3860	8.30	9.88	18.18	46.00	-27.82	AVG	
11		4.4540	29.20	10.23	39.43	56.00	-16.57	QP	
12		4.4540	7.20	10.23	17.43	46.00	-28.57	AVG	

7.3 RADIATED SPURIOUS EMISSION

7.3.1 Applicable Standard

According to FCC Part 15.209

7.3.2 Conformance Limit

According to FCC Part15.205, Restricted bands

MHz	MHz	MHz	GHz
0.090-0.110	16.42-16.423	399.9-410	4.5-5.15
10.495-0.505	16.69475-16.69525	608-614	5.35-5.46
2.1735-2.1905	16.80425-16.80475	960-1240	7.25-7.75
4.125-4.128	25.5-25.67	1300-1427	8.025-8.5
4.17725-4.17775	37.5-38.25	1435-1626.5	9.0-9.2
4.20725-4.20775	73-74.6	1645.5-1646.5	9.3-9.5
6.215-6.218	74.8-75.2	1660-1710	10.6-12.7
6.26775-6.26825	123-138	2200-2300	14.47-14.5
8.291-8.294	149.9-150.05	2310-2390	15.35-16.2
8.362-8.366	156.52475-156.52525	2483.5-2500	17.7-21.4
8.37625-8.38675	156.7-156.9	2690-2900	22.01-23.12
8.41425-8.41475	162.0125-167.17	3260-3267	23.6-24.0
12.29-12.293	167.72-173.2	3332-3339	31.2-31.8
12.51975-12.52025	240-285	3345.8-3358	36.43-36.5
12.57675-12.57725	322-335.4	3600-4400	(2)
13.36-13.41			

According to FCC Part15.209, the level of any transmitter spurious emission in Restricted bands shall not exceed the level of the emission specified in the following table

Restricted Frequency(MHz)	Field Strength (μV/m)	Field Strength (dBμV/m)	Measurement Distance
0.009-0.490	2400/F(KHz)	48.5 - 13.8	300
0.490-1.705	24000/F(KHz)	33.8 – 23.0	30
1.705-30	30	29.5	30
30-88	100	40.0	3
88-216	150	43.5	3
216-960	200	46.0	3
Above 960	500	54.0	3

7.3.3 Test Configuration

Test according to clause 6.2 radio frequency test setup 2

7.3.4 Test Procedure

This test is required for any spurious emission that falls in a Restricted Band, as defined in Section 15.205. It must be performed with the highest gain of each type of antenna proposed for use with the EUT. Use the following spectrum analyzer settings:
The EUT was placed on a turn table which is 0.8m above ground plane.
Maximum procedure was performed on the highest emissions to ensure EUT compliance.
Span = wide enough to fully capture the emission being measured
RBW = 100 kHz for f < 1 GHz(30MHz to 1GHz), 200Hz for f<150KHz(9KHz to 150KHz), 9KHz for f<30MHz(150KHz to 30KHz)
VBW ≥ RBW
Sweep = auto
Detector function = peak
Trace = max hold
Follow the guidelines in ANSI C63.10-2013 with respect to maximizing the emission by rotating the EUT, measuring the emission while the EUT is situated in three orthogonal planes (if appropriate), adjusting the measurement antenna height and polarization, etc. A pre-amp and a high pass filter are required for this test, in order to provide the measuring system with sufficient sensitivity. Allow the trace to stabilize. The peak reading of the emission, after being corrected by the antenna factor, cable loss, pre-amp gain, etc., is the peak field strength, which must comply with the limit specified in Section 15.35(b). Submit this data.
Now set the VBW to 10 Hz, while maintaining all of the other instrument settings. This peak level, once corrected, must comply with the limit specified in Section 15.209. If the dwell time per channel of the hopping signal is less than 100 ms, then the reading obtained with the 10 Hz VBW may be further adjusted by a “duty cycle correction factor”, derived from 20log(dwell time/100 ms), in an effort to demonstrate compliance with the 15.209 limit. Submit this data.
Repeat above procedures until all frequency measured was complete.

7.3.5 Test Results

■ Spurious Emission below 150kHz (9KHz to 150kHz)

All mode have been tested, and the worst result was report as below:

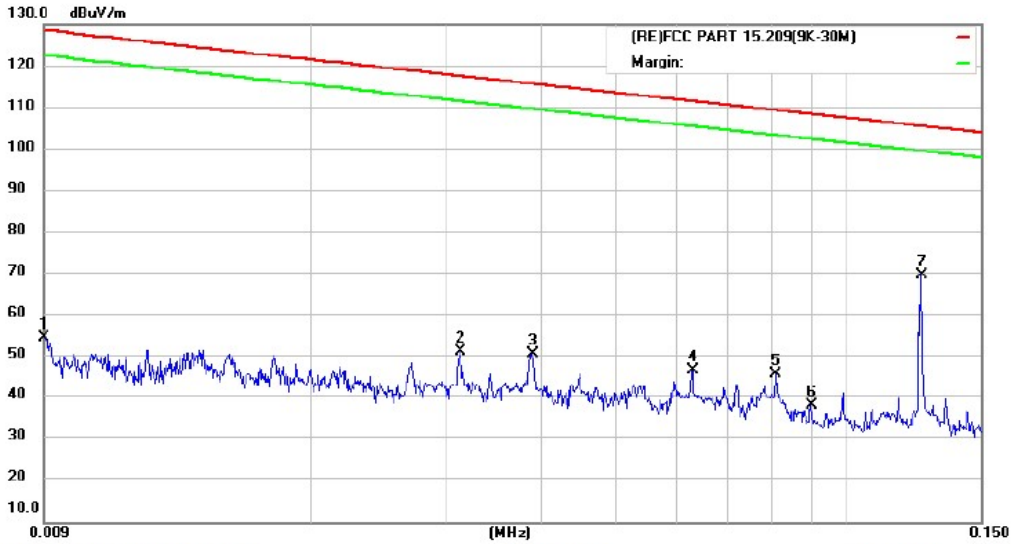

Site Radiated Emission 3m #1 Polarization: Temperature: 27

Limit: (RE)FCC PART 15.209(9K-30M) Power: AC 120V/60Hz Humidity: 43 %

Mode:125K

Note:

No.	Mk.	Freq.	Reading Level	Correct Factor	Measure-ment	Limit	Over		Antenna Height	Table Degree	
		MHz	dBuV	dB	dBuV/m	dBuV/m	dB	Detector	cm	degree	Comment
1		0.0090	64.15	-9.35	54.80	128.31	-73.51	peak			
2		0.0314	60.92	-9.36	51.56	117.52	-65.96	peak			
3		0.0390	60.19	-9.23	50.96	115.65	-64.69	peak			
4		0.0629	56.65	-9.47	47.18	111.52	-64.34	peak			
5		0.0810	55.83	-9.73	46.10	109.34	-63.24	peak			
6		0.0900	48.03	-9.55	38.48	108.43	-69.95	peak			
7	*	0.1250	79.34	-9.35	69.99	105.59	-35.60	peak			

■ Spurious Emission below 30MHz (150KHz to 30MHz)

All mode have been tested, and the worst result was report as below:

Site Radiated Emission 3m #1 Polarization: Temperature: 27

Limit: (RE)FCC PART 15.209(9K-30M) Power: AC 120V/60Hz Humidity: 43 %

Mode:125K

Note:

No.	Mk.	Freq.	Reading Level	Correct Factor	Measure-ment	Limit	Over		Antenna Height	Table Degree	
		MHz	dBuV	dB	dBuV/m	dBuV/m	dB	Detector	cm	degree	Comment
1		0.1884	68.05	-9.26	58.79	102.05	-43.26	peak			
2		0.4100	55.27	-9.12	46.15	95.34	-49.19	peak			
3		0.4900	52.16	-9.11	43.05	73.80	-30.75	peak			
4		1.0141	59.32	-9.14	50.18	67.50	-17.32	QP			
5	*	1.6532	58.61	-9.34	49.27	63.27	-14.00	QP			
6		3.7818	53.93	-9.74	44.19	69.50	-25.31	QP			

■ Spurious Emission Above 30MHz (30MHz to 1GHz)

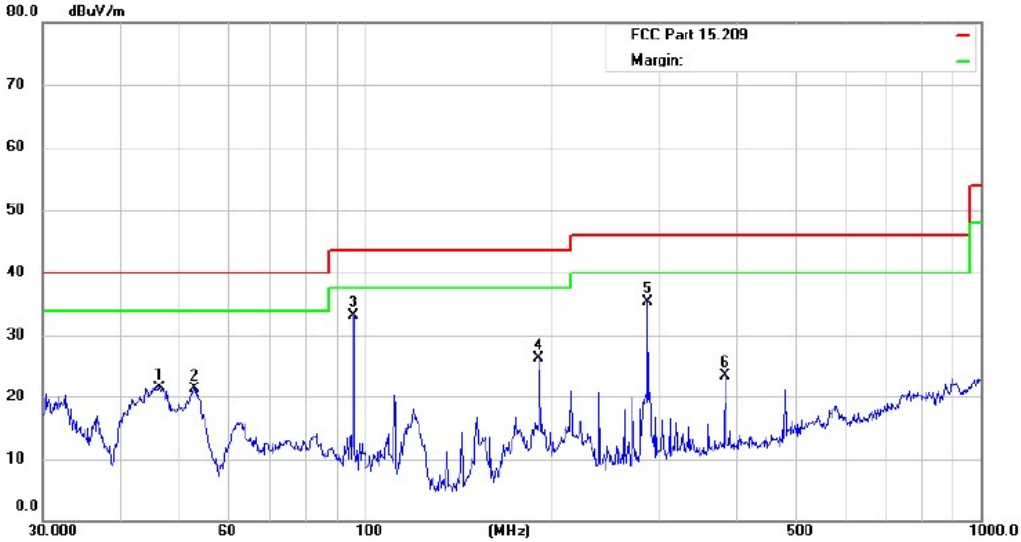

Site Radiated Emission 3m #1 Polarization: *Vertical* Temperature: 24

Limit: FCC Part 15.209 Power: AC 120V/60Hz Humidity: 55 %

Mode:125KHz

Note:

No.	Mk.	Freq.	Reading Level	Correct Factor	Measure-ment	Limit	Over		Antenna Height	Table Degree	
		MHz	dBuV	dB	dBuV/m	dBuV/m	dB	Detector	cm	degree	Comment
1		46.5030	42.47	-20.97	21.50	40.00	-18.50	QP			
2		52.9453	42.32	-21.02	21.30	40.00	-18.70	QP			
3	*	95.7622	57.56	-24.36	33.20	43.50	-10.30	QP			
4		191.7450	49.78	-23.38	26.40	43.50	-17.10	QP			
5		287.9904	55.97	-20.57	35.40	46.00	-10.60	QP			
6		383.9318	41.73	-18.13	23.60	46.00	-22.40	QP			

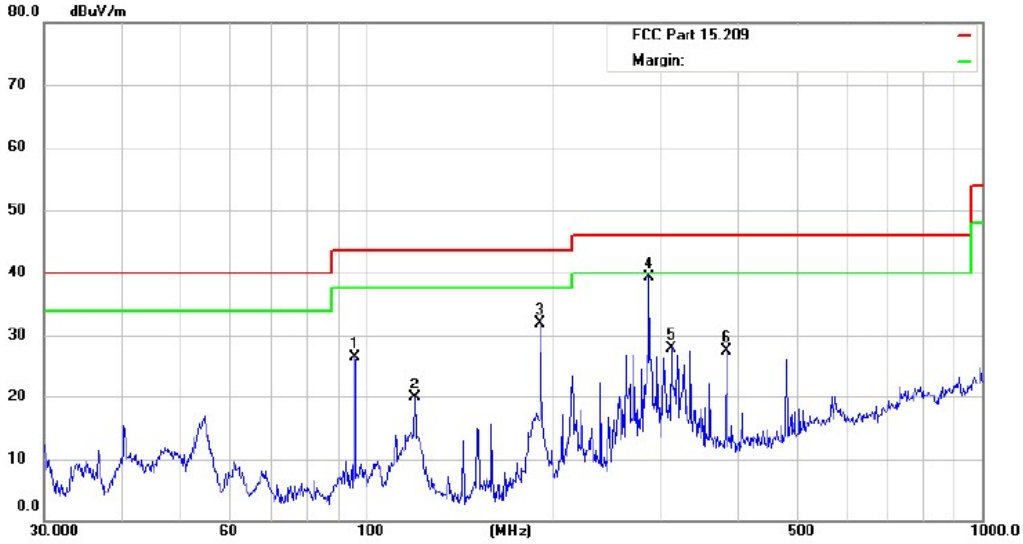

Site Radiated Emission 3m #1 Polarization: ***Horizontal*** Temperature: 24

Limit: FCC Part 15.209 Power: AC 120V/60Hz Humidity: 55 %

Mode:125KHz

Note:

No.	Mk.	Freq.	Reading Level	Correct Factor	Measure-ment	Limit	Over		Antenna Height	Table Degree	
		MHz	dBuV	dB	dBuV/m	dBuV/m	dB	Detector	cm	degree	Comment
1		95.7622	50.86	-24.36	26.50	43.50	-17.00	QP			
2		119.8556	44.96	-25.06	19.90	43.50	-23.60	QP			
3		191.7450	55.28	-23.38	31.90	43.50	-11.60	QP			
4	*	287.9904	59.97	-20.57	39.40	46.00	-6.60	QP			
5		312.1794	47.89	-19.89	28.00	46.00	-18.00	QP			
6		383.9318	45.73	-18.13	27.60	46.00	-18.40	QP			

8 ANTENNA APPLICATION

8.1.1 Antenna Requirement

Standard	Requirement
FCC CRF Part 15.203	An intentional radiator shall be designed to ensure that no antenna other than that furnished by the responsible party shall be used with the device. The use of a permanently attached antenna or of an antenna that uses a unique coupling to the intentional radiator shall be considered sufficient to comply with the provisions of this section. The manufacturer may design the unit so that a broken antenna can be replaced by the user, but the use of a standard antenna jack or electrical connector is prohibited. This requirement does not apply to carrier current devices or to devices operated under the provisions of §15.211, §15.213, §15.217, §15.219, or §15.221. Further, this requirement does not apply to intentional radiators that must be professionally installed, such as perimeter protection systems and some field disturbance sensors, or to other intentional radiators which, in accordance with §15.31(d), must be measured at the installation site. However, the installer shall be responsible for ensuring that the proper antenna is employed so that the limits in this part are not exceeded.

For intentional device, according to FCC 47 CFR Section 15.203, an intentional radiator shall be designed to ensure that no antenna other than that furnished by the responsible party shall be used with the device.

8.1.2 Result

PASS.

Note: ☒ Antenna use a permanently attached antenna which is not replaceable.
☐ Not using a standard antenna jack or electrical connector for antenna replacement
☐ The antenna has to be professionally installed (please provide method of installation)

which in accordance to section 15.203, please refer to the internal photos.

*** End of Report ***

声 明
Statement

1. 本报告无授权批准人签字及“检验报告专用章”无效；
   This report will be void without authorized signature or special seal for testing report.

2. 未经许可本报告不得部分复制；
   This report shall not be copied partly without authorization.

3. 本报告的检测结果仅对送测样品有效，委托方对样品的代表性和资料的真实性负责；
   The test results or observations are applicable only to tested sample. Client shall be responsible for representativeness of the sample and authenticity of the material.

4. 本检测报告中检测项目标注有特殊符号则该项目不在资质认定范围内，仅作为客户委托、科研、教学或内部质量控制等目的使用；
   The observations or tests with special mark fall outside the scope of accreditation, and are only used for purpose of commission, research, training, internal quality control etc.

5. 本检测报告以实测值进行符合性判定，未考虑不确定度所带来的风险，本实验室不承担相关责任，特别约定、标准或规范中有明确规定的除外；
   The test results or observations are provided in accordance with measured value, without taking risks caused by uncertainty into account. Without explicit stipulation in special agreements, standards or regulations, EMTEK shall not assume any responsibility.

6. 对本检测报告若有异议，请于收到报告之日起 20 日内提出；
   Objections shall be raised within 20 days from the date receiving the report.