Rev.:	Description:	Date:	Drawn:	Checked:	Approved:
00	FIRST RELEASE	10.Feb.20	DELANGT 10.Feb.20	DELANGT 10.Feb.20	DEKOENM 10.Feb.20
01	UPDATE VIEWS TO P1.1	18.May. 2020	DELANGT 18.May. 2020	DELANGT 18.May. 2020	DEKOENM 18.May. 2020
02	Release P2	25.Jun.2021	DELANGT 25.Jun.2021	DELANGT 25.Jun.2021	DEKOENM 25.Jun.2021
03	UPDATE VIEWS; NEW LED LABEL (POS50)	17.Jan.22	delangt 17.Jan.22	delangt 17.Jan.22	dekoenm 17.Jan.22

DCC-Thailand5
Document is released
2022.02.01 16:58:27
+07'00'

DELTA CONFIDENTIAL

© Delta Energy Systems (Germany) GmbH

A4
SIZE

Description
CS WPP STD 30KW

THESE DRAWINGS AND SPECIFICATIONS ARE THE PROPERTY OF DELTA ENERGY SYSTEMS (GERMANY) GMBH AND SHALL NOT BE REPRODUCED OR USED AS THE BASIS FOR THE MANUFACTURE OR SELL OF APPARATUSES OR DEVICES WITHOUT PERMISSION.

Doc-Typ: SN0

Part No.: EOE18010851

REV.: 03

Plant Teningen | Used on: EOE18010851 | Ver.:03.2 | Sheet: 1 of 2

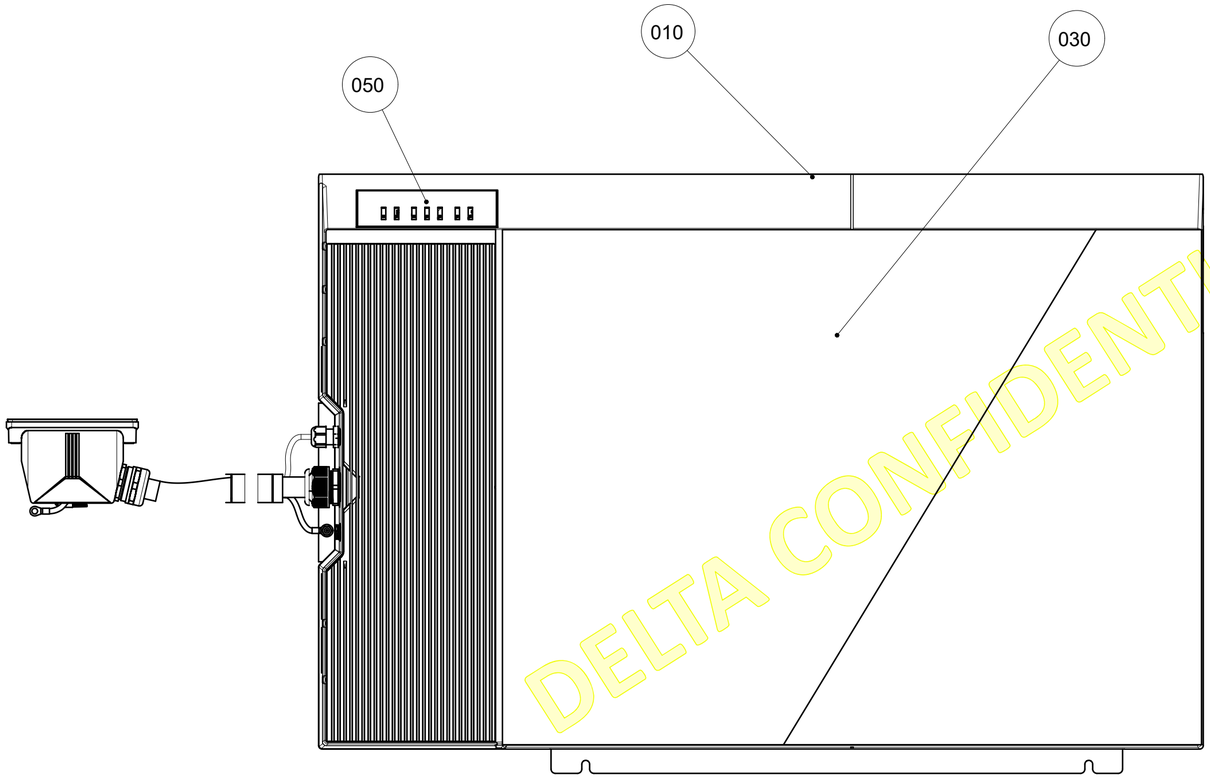

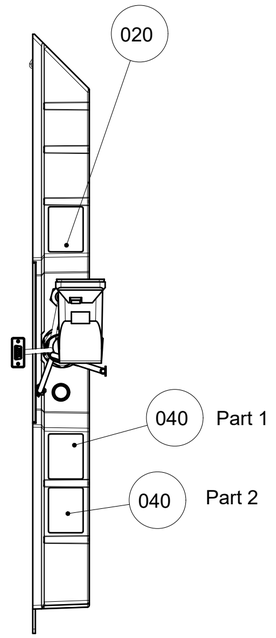

DELTA CONFIDENTIAL

Must meet Delta General Spec. 10000-0162

DELTA		DRAWN:	delangt	DATE:	17.Jan.2022
		CHECKED:	delangt	DATE:	17.Jan.2022
	© Delta Energy Systems (Germany) GmbH	APPROVED:	dekoenm	DATE:	17.Jan.2022
THESE DRAWINGS AND SPECIFICATIONS ARE THE PROPERTY OF DELTA ENERGY SYSTEMS (GERMANY) GMBH AND SHALL NOT BE REPRODUCED OR USED AS THE BASIS FOR THE MANUFACTURE OR SELL OF APPARATUSES OR DEVICES WITHOUT PERMISSION.		Released			Ver.: 03.2
		FIRST ANGLE PROJECTION	Description		CS WPP STD 30KW
Plant Teningen	Doc-Typ: SN0	A2 SIZE	Part No.:	EOE18010851	REV.:
GENERAL TOL.:			Sheet 2 of 2	ECO_No.: 101BTE05174	03
SCALE: 1:5	UNIT: MM	Used on: EOE18010851			