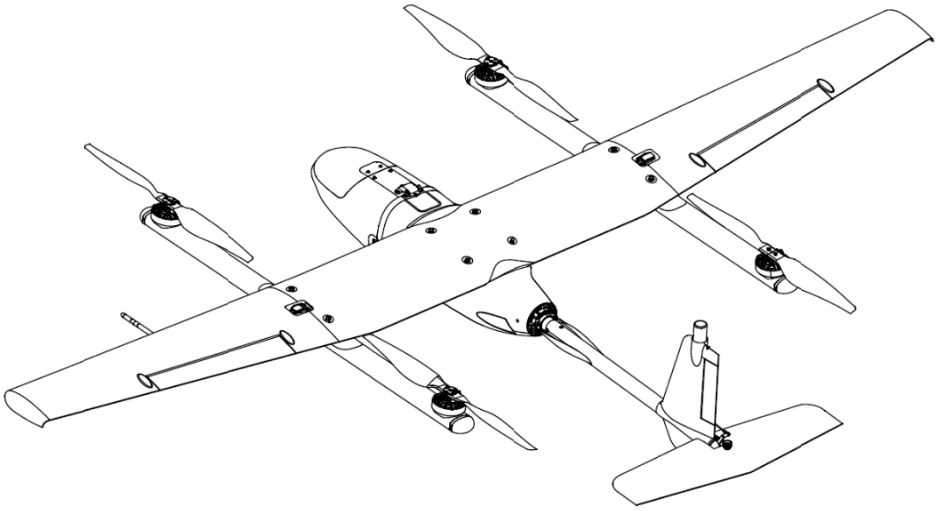

# CW Series UAV CW-007 II
# Instruction Manual

Nov. 2019

Version 2.0

# Reading Tips

## Notation

**Forbidden** **Warning** **Prompt Notes**

## Technical Support

Web：www.jouav.com

Tel：+86-18381338373

## Manuals List

《CW-007 II Instruction Manual》

《CWCommander Manual》

《CW-007 II Normal Checklist》

《CW-007 II Abnormal Checklist》

《CW-007 II Emergency Checklist》

《CW-007 II Maintenance Manual》

《Radio Controller Manual》

《Charger Manual》

Those are all manuals we provide for customers. The customers can learn from manual and check by checklist.

# Safety Regulation

## Warning

This is a special product, incorrect operation can cause harm resulting in bodily and/or death, user would be responsible for that.

Must read manuals for safe and better using, or contact the manufacturer.

## Attention

### Airspace Regulation

The mission should be allowed by local department who charge the airspace.

### This is Forbidden

- Take off and land where is close to airport, railway, factory, electric tower, high voltage line, military installation, city and town, and the no-fly zone by the local government, department, and the law.
- If the planned flight area has important protective targets or unclear targets, it shall be reported to the local police area for approval in addition to air traffic control.

### Flight Range

- Make sure that the airway is clear.
- There is turbulence in the buildings and mountains, do not fly in there.

### Crew

- Each crew member should be trained by manufacturer and get the certification. Operate the system by procedure and checklist.
- The crew shouldn't feel tired and uncomfortable.
- Do not drink before flight.

# Disclaimer

## JOUAV will not be responsible for the things as below.

**Forbidden**

- Change the air-frame and payload without permission of manufacturer.
- Replace equipment and accessories with different models.
- Change the parameters of autopilot without permission of manufacturer.
- Change the ground control station.
- The crew member who was not trained by manufacturer or didn't pass the training.

**Not Safe**

- Not allowed by local department or fly in where is prohibited.
- Exceeding performance limits, such as ceiling, max speed, wind resistance, endurance, data link limit.
- Extreme weather, such as thunderstorm, rain, typhoon, heavy fog.
- Flight planning does not comply with safety regulations.
- Taking off even not pass the pre-flight check.
- Exceeding the service life.

Copyright©JOUAV

# Contents

Reading Tips ..... 1
Notation ..... 1
Technical Support ..... 1
Manuals List ..... 1
Safety Regulation ..... 2
Warning ..... 2
Attention ..... 2
Disclaimer ..... 3
Summary ..... 6
Features ..... 6
Performance & Limitation ..... 7
GCS-202 ..... 7
The Usage of CW-007 II System ..... 9
Assembly ..... 9
Payload ..... 15
Radio Controller ..... 17
Battery ..... 17
Lithium Ion Polymer Rechargeable Battery ..... 17
The Function and Usage of GCS-202 ..... 24
CW Commander Ground Station Software ..... 25
Accessories ..... 25
The Default Parameters ..... 26
CW-007 II Operation Procedure ..... 27
Preparing ..... 27
GCS-202 Installation ..... 27
Assembly and Check ..... 28
GCS Check and Mission Plan ..... 28
Before Take Off ..... 30
After Take Off ..... 30

Flying ..... 31
Landing ..... 32
After Landing ..... 33
Data Download ..... 33
Maintenance and Update ..... 37
Fuselage Maintenance ..... 37
Battery Maintenance ..... 37
Aircraft and Accessories Update ..... 38

# Summary

## Features

CW series UAV are kind of vertical take off and landing fixed wing UAV, which published by Chengdu JOUAV Automation Tech. Co., Ltd. And CW series UAV combined by fixed wing and quad-rotor, the maintenance is easy, and it has the property of long endurance, velocity, long range, and vertical take off and landing.

The autopilot which is designed for CW Series UAV, and the UAV can take off, landing, and convert from fixed wing to multi-rotor or from multi-rotor to fixed wing automatically.

**Main Features：**

- Aerodynamic Configuration: Composited by quad rotor and fixed wing.
- High Efficiency: Assemble & Disassemble quickly, long endurance, velocity, long radius.
- VTOL: No need of runway.
- Easy to use: Auto take off and landing.
- Reliable: Complete alert & emergency logic
- RTK: Accuracy & Safety

## Performance & Limitation

**CW-007 II Performance**

| | |
|---|---|
| Wingspan | 2.2m |
| Length | 1.3m |
| Cruise Speed | 19m/s |
| Endurance | 60min |
| Payload | 800g |
| Time to expand/remove | <3min |

**CW-007 II Limitation**

| | |
|---|---|
| Max. Speed | 27m/s |
| Stall Speed | 16m/s |
| Wind Resistance | Strong Breeze |
| Max. Take Off Height | 4500m |
| Ceiling | 6000m |
| MTOW | 6.8kg |
| Data Link | 30km |
| Max. Climb Angle | 6 degrees |
| Rain-proof | Light rain (≤10mm/24h) |

## GCS-202

GCS-202 communicated with aircraft by data link, and communicated with GCS software by WiFi.

③ Data Link Antenna

④ WiFi Antenna

⑤ Product Model

⑥ Hardware Serial Number

⑦ Power

⑧ Charging Port/ External Battery Port

⑨ Charge Status

⑩ Power Status

⑪ RS422 Port

⑬ TXD/ Data Transmission

⑭ RXD/ Data Receiving

⑮ Data link signal

⑯ WiFi Status

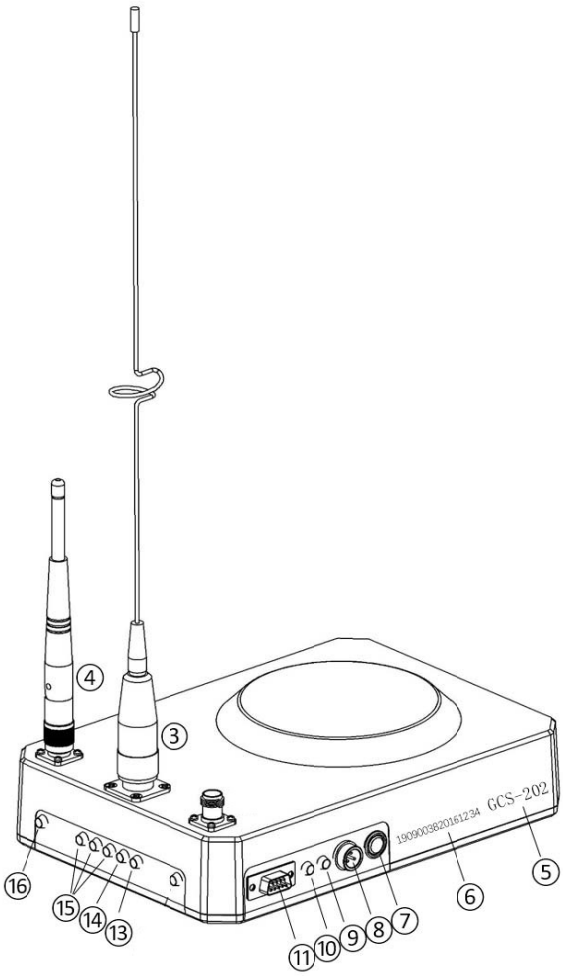


Functions

- Charger Port/External Battery port, used for charging or connecting with a external battery.
- RS422 Port, use for downloading Base data, and connecting with GCS software by cable, and updating the GCS-202.
- TXD status is always light on.
- RXD status is about twice per second normally.

Copyright©JOUAV

# The Usage of CW-007 II System

## Assembly

Assembly procedure as below：

1. Main wing installation

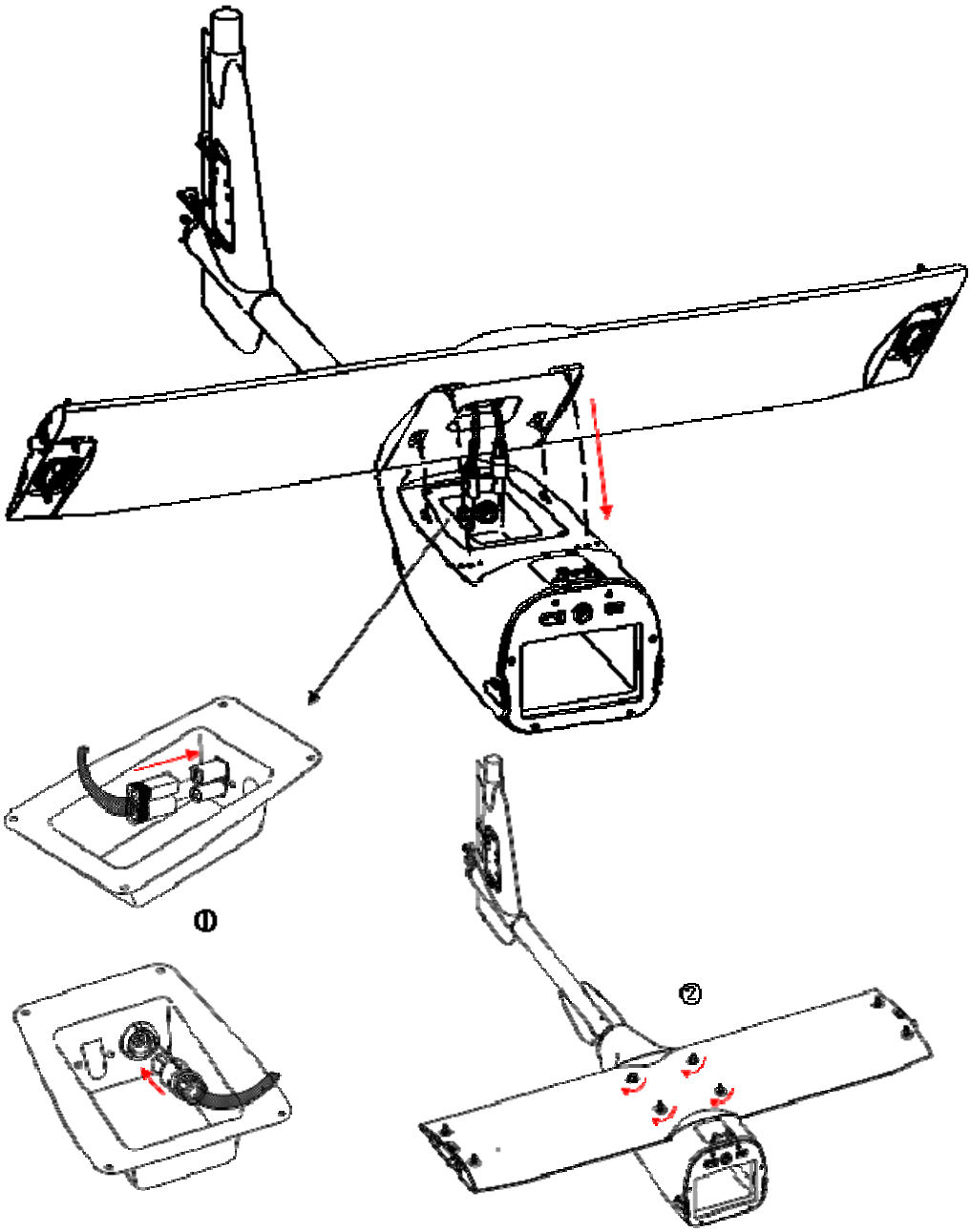


Copyright©JOUAV9

2. Multi-rotor installation

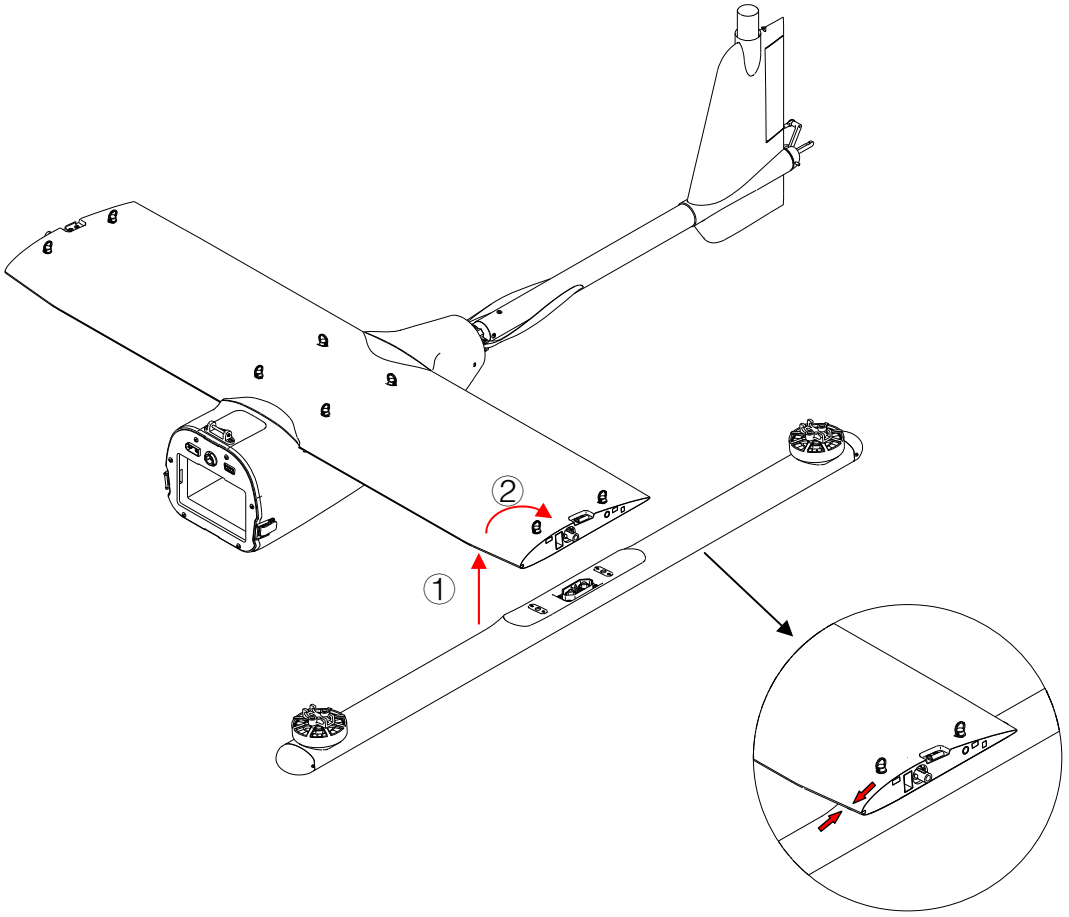


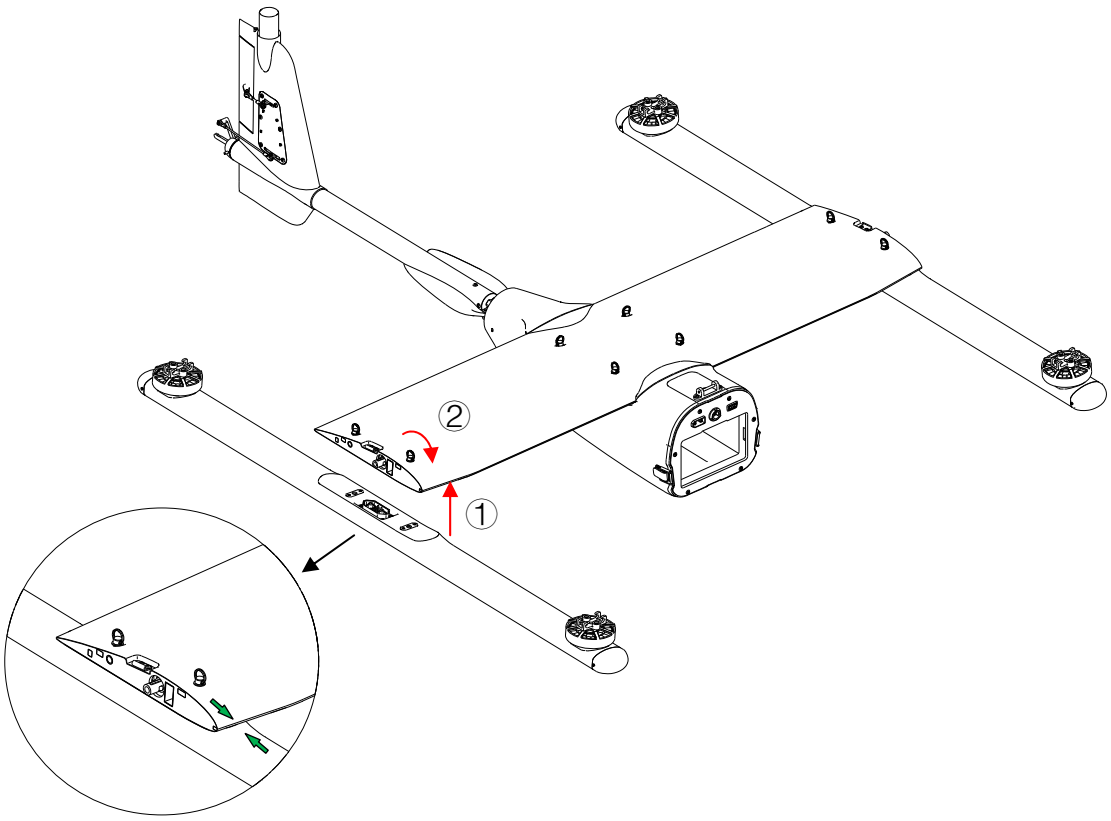


Copyright©JOUAV

3. Left and right wings installation

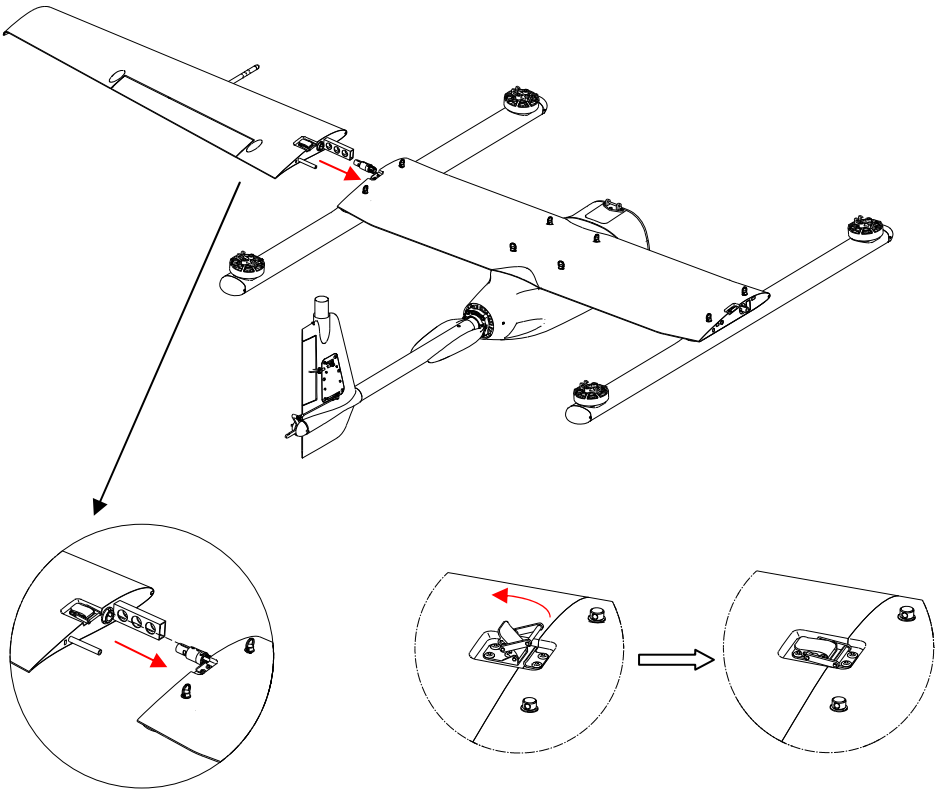

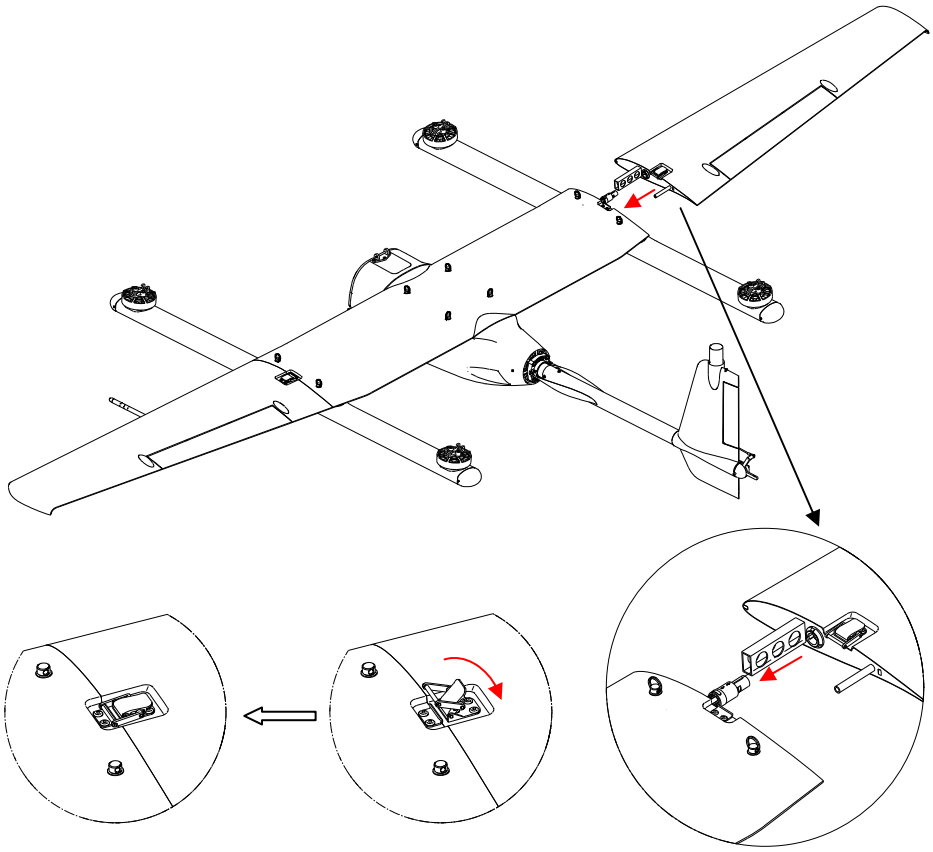

Copyright©JOUAV11

4. Elevator installation

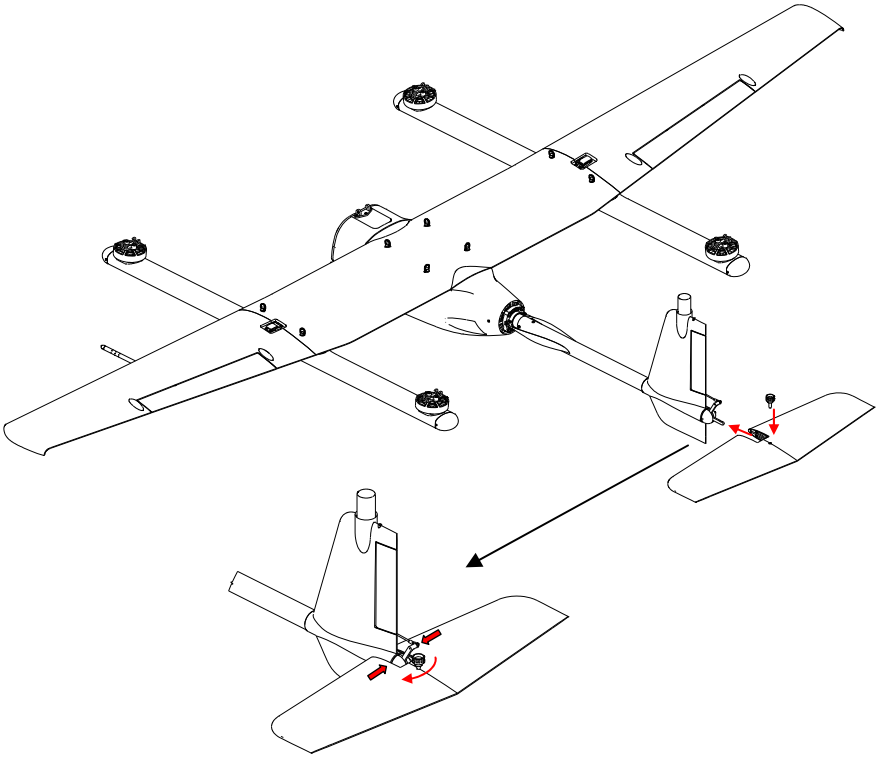

5. Propellers installation

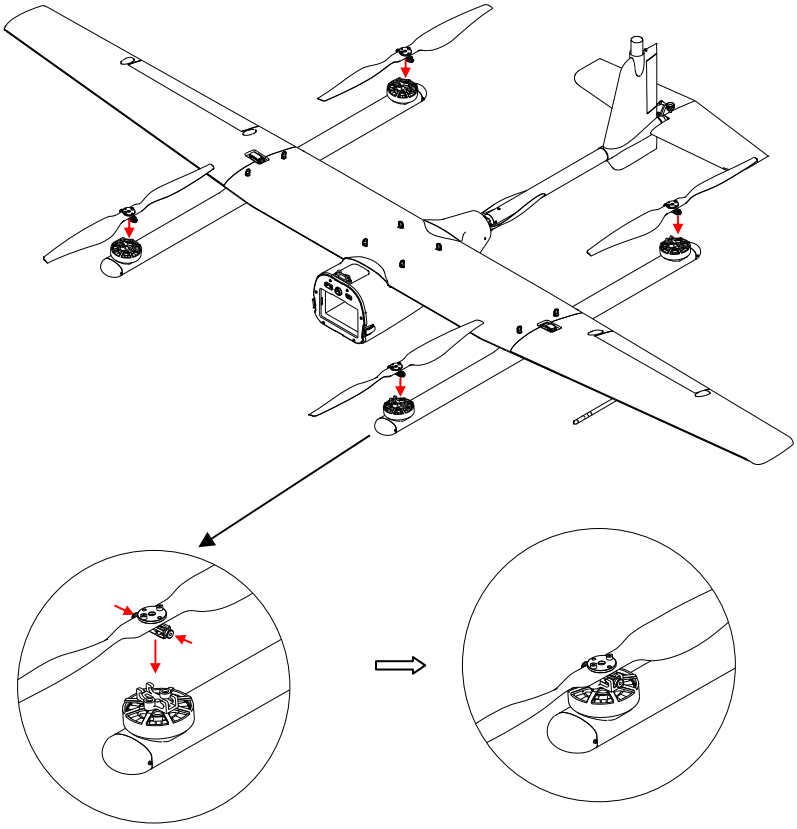

Copyright©JOUAV

6. Battery installation

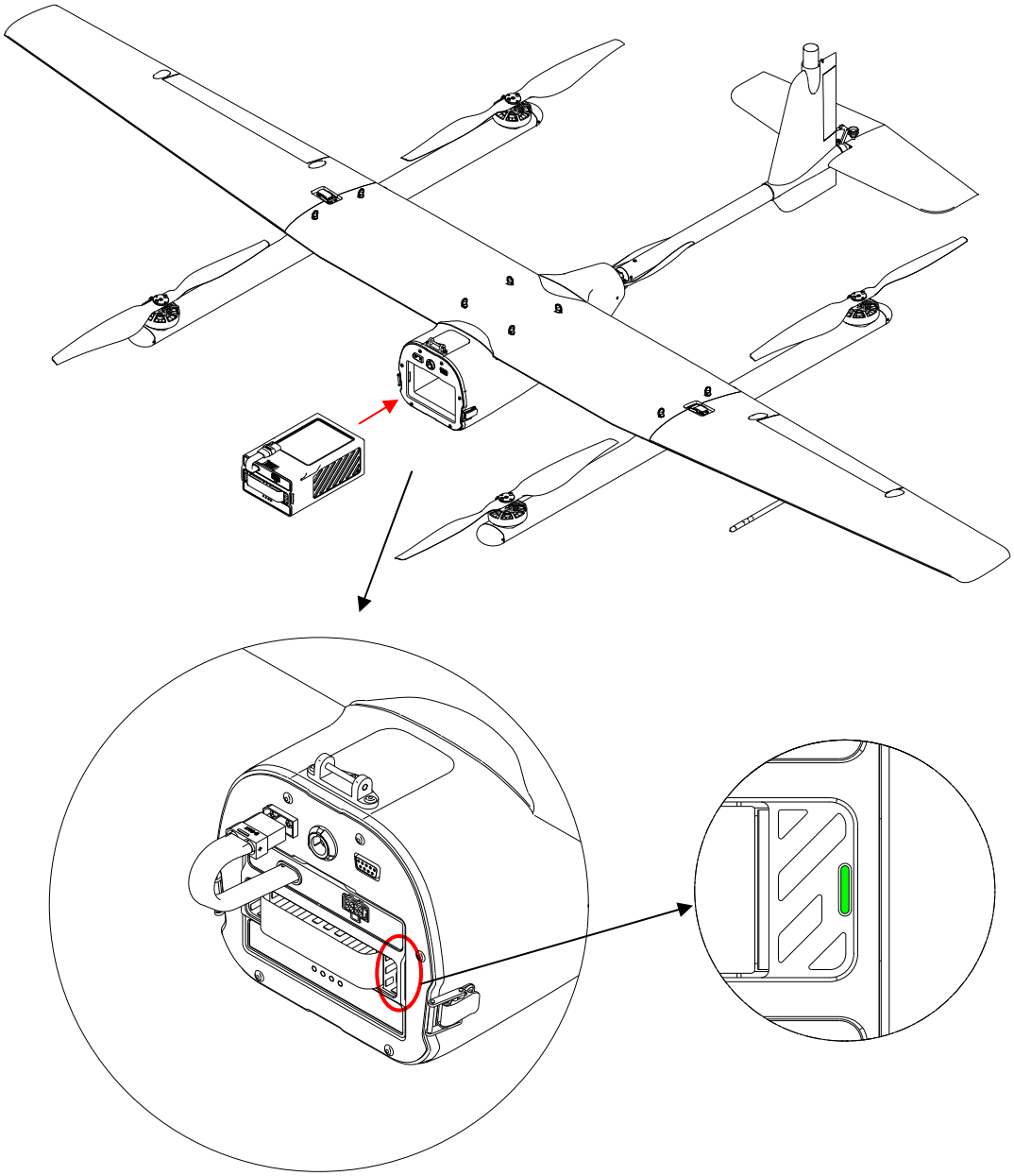

Copyright©JOUAV13

7. Payload installation

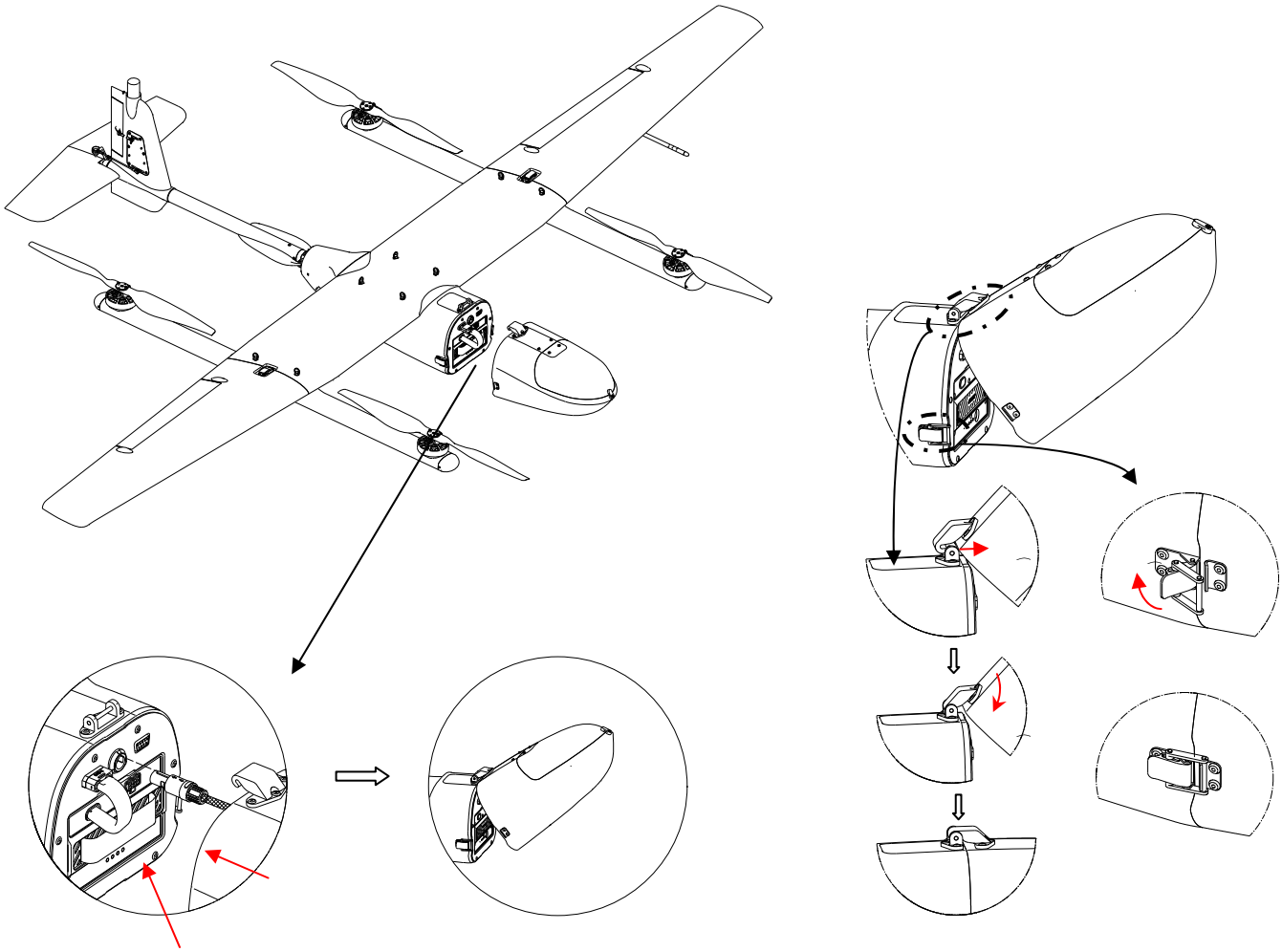

## Payload

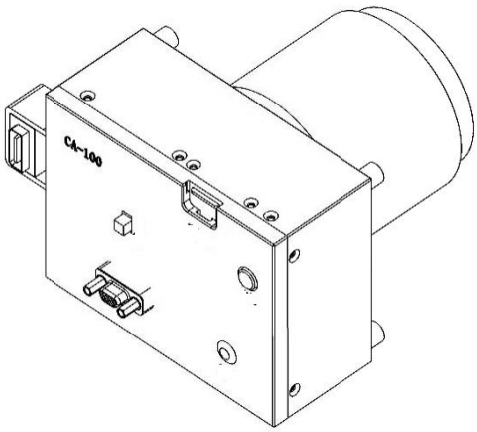


CA-100 camera is the standard payload for CW-007 II, which is a full-frame camera developed for aerial surveying. The main parameters are as follows:

| | |
|---|---|
| CMOS Size | 35. 9×24. 0mm(Full Frame) |
| Resolution | 7952×5304 |
| Pixels | 42MP |
| Lens | 35mm |

### 1. Usage of Camera

| | |
|---|---|
| On/Off | Power |
| Memory card | Micro - SD card |
| Shutter | Shot Button |
| Control | Connect to the Control Box |
| Input | Power Supply, Camera Signal V=Cable |
| HDMI Interface | Connect to the Control Box |

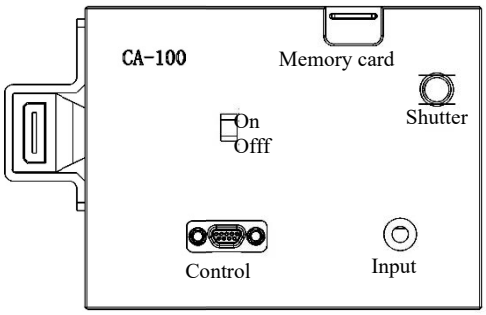


All parameters have been preset at the factory. Suggest to take shooting test and confirm the effect before every flight. Below is the setting:

| | |
|---|---|
| ISO | AUTO (100-400) |
| Aperture | F 6. 3 |
| Shutter Speed | 1/1000 |

If the photo is overexposed, increase the value of shutter speed.

*It doesn't matter if the photo is not so bright but it's clear, you can adjust exposure after processing. If the IOS is too high, maybe the photo will be overexposure.*

Copyright©JOUAV15

## 2. Camera Control Box and Settings

When changing camera Settings and formatting memory CARDS, you need to use the camera control box to view and operate. The operation panel of the camera control box is shown below

Usage of camera control box is:

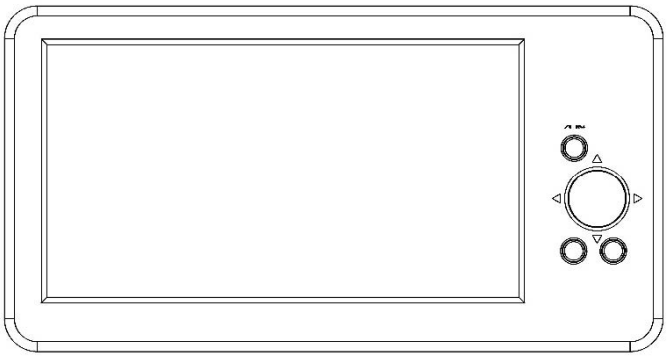

1) Make sure the camera power is switched off
2) Connect the HDMI cable and control cable
3) Turn on the camera power
4) Use the control box panel to set parameters
5) Turn off the camera's power, and wait 30 seconds to re-start. Make sure the Settings are saved.
6) Turn off the power again and disconnect the cable

***Do not energize on or off the camera when the power switch is on!***

## 3. Maintenance

- Storage: the CA-100 camera is recommended to be powered once a week. If it is not powered for a long time, please keep it dry and dust-proof.
- Transportation: please use packing box to transport and avoid inversion.

## 4. Other Payload

For non - standard UAV, function and use of different payloads, please refer to the manual

Copyright©JOUAV

## Radio Controller

We use the TC-100 RC for CW-007 II, please refer to the manual of TC-100 RC.

## Battery

### 1. Batteries of CW-007 II

Lithium Ion Polymer Rechargeable Battery

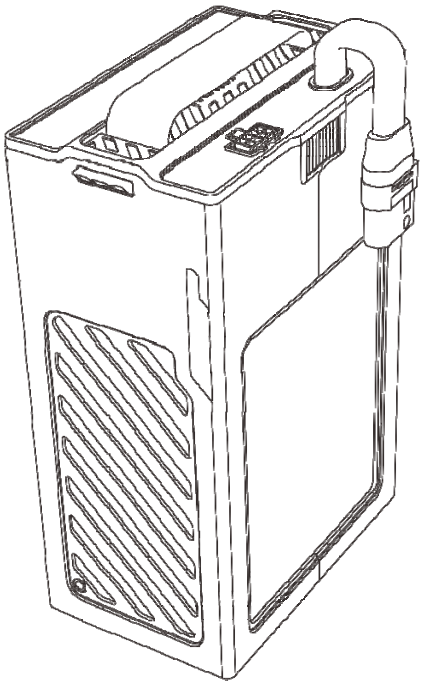

### 2. Safety tip

These warnings and safety tips are very important. Please read them carefully. Without strong safety awareness, improper operation may result in product damage, property loss, injury and even death.

⚠

- The battery should be used at ambient temperature between -10℃ and 50℃. High temperatures (above 60℃) may cause batteries to catch fire or even explode. If the temperature is

Copyright©JOUAV17

too low (less than 10℃), the performance of the battery will be reduced and cannot meet the requirements of normal use. Please start the heating function in advance, and it can be used normally when the temperature is restored.

- Battery charging environment temperature should be between 5℃ and 45℃, low temperature (below 5℃) charging will cause irreversible damage to the battery, even personal injury.
- Please use the original charger for charge and discharge, do not charge and discharge when unattended.
- If the battery falls from the UAV or is hit by external force, it shall not be used again.
- When removing batteries from the UAV, be sure to protect them from hitting the ground. Do not pull the handle strap violently.
- If there is dirt in the battery socket, clean it with a dry cloth. Otherwise, poor contact can result in energy loss or failure to charge.
- The liquid inside the battery is corrosive. If there is leakage, please stay away from it. If internal fluid spatters on human skin or eyes, rinse immediately with water and go to a doctor immediately.
- When the battery is not used properly, such as short circuit, overcharge, over discharge, etc. , it may cause fire or explosion.
- When placing the battery, make sure the ground is flat to prevent sharp objects from poking the bottom of the battery.
- The battery is heavy. Please place it carefully to prevent the battery from toppling and causing side damage. In case of battery damage, please immediately place the battery in an open area where is away from combustible materials and people. After half an hour, soak the battery in water for more than 24 hours. Ensure that the battery is completely exhausted before disposal.
- If the battery accidentally falls into the water during the flight of the UAV or under other circumstances, please pull out the battery immediately and place it in a safe and open area, and stay away from the battery until it is completely dried. Dry batteries are not allowed to be used again and should be disposed of properly in accordance with the waste method described in this

Copyright©JOUAV

article. In case of battery fire, it is recommended to use fire extinguishing equipment in the following order: Soak it in water with tools, sand, fire blanket, dry powder, carbon dioxide extinguisher.

- Do not use batteries with bulging, leaking or damaged packaging. If the battery is in use or charging & discharging, remove it from the UAV or charger immediately and discontinue use.
- Do not use batteries in strong static or magnetic fields. Otherwise, the battery circuit board may be abnormal, which could lead to serious failure of the UAV.
- Do not discharge beyond the maximum discharge current of the battery, or it may cause fire or explosion.
- Do not use batteries near a heat source, such as in direct sunlight or in a car on a hot day.
- It is forbidden to short-circuit the positive and negative electrodes of the battery with wires or other metal objects.
- It is forbidden to continue flying when the battery power is less than 15%, otherwise it will cause battery damage or cause flight accident.
- Do not disassemble batteries by yourself to avoid danger.
- Do not disassemble, puncture, impact, collision, short circuit the battery or put the battery into fire, or it may cause fire or explosion.
- Do not allow the battery to come into contact with any liquid. Do not immerse the battery in water or make it wet. Do not use batteries in rain or humid environment. Contact with water inside the battery could lead to a decomposition reaction that could cause the battery to spontaneously ignite or even explode.
- Batteries are dangerous stuff. Do not pile other things on the battery, or use the battery and packaging containing the battery as cushion, otherwise the battery may be damaged or even dangerous.

## 3. Introduction and parameters

➢ Introduction

Lithium Ion Polymer Rechargeable Battery (hereinafter referred to as smart battery) is a specially

Copyright©JOUAV19

designed for the CW-007 II model with intelligent management system of smart battery. Smart battery has efficient low-temperature heating function and discharge storage function, and intelligent power management during flight. Compared with ordinary battery, energy utilization rate can be increased by 30%, thus improving operation efficiency. The smart battery uses a new high energy density battery cell and advanced battery management system to provide abundant power for the unmanned aircraft system.

- Parameters
  - Model: JIB-18000A
  - Rated capacity: 18000mAh
  - Adaptation of UAV model: CW-007 II
  - Adaptation of charger model: JIC-750A(CW-007 II standard charger), JICC-1500-A (Smart battery manager)
  - Platform voltage: 22. 8V
  - Battery type: lithium polymer battery 6S
  - Energy: 410 Wh
  - Weight: About 2. 2Kg
  - Charging temperature: 5℃-45℃
  - Charging limit voltage: 26. 1V

**4. Packing list**

- Smart lithium battery X1

**5. Description of appearance**

Copyright©JOUAV

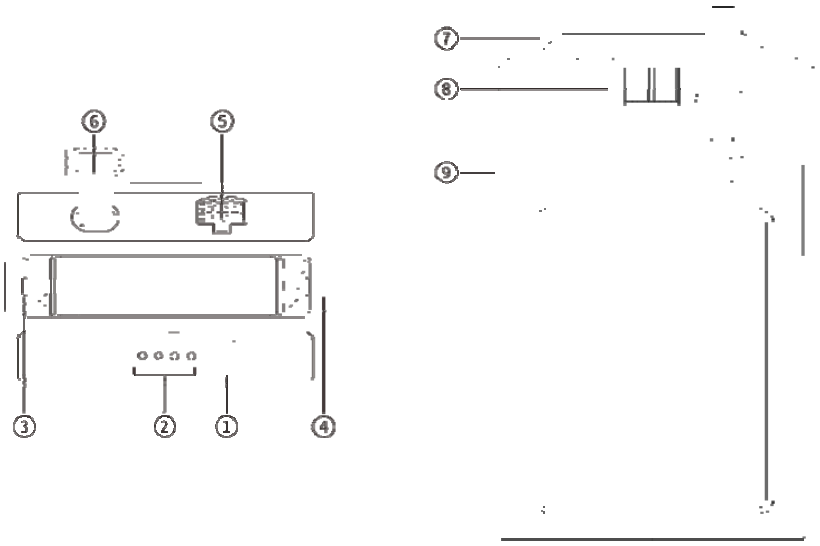


① Function button ② Status indicator lamp ③ Lock status indication ④ Buckle lock ⑤ Charging balance port ⑥ Power cord ⑦ Nylon handle ⑧ Communication connector ⑨ Smart battery manager battery limit slot

The status indicator is in order from left to right: LED1、LED2、LED3、LED4.

**6. Battery function**

Smart batteries have the following functions:

- Battery display: Battery has its own indicator light. Press once to check the current battery power and give an alarm when the capacity is low.
- Intelligent communication: After connecting to the aircraft, the battery information can be viewed through the software of the ground station.
- Usage record: Management system can record usage conditions, such as maximum load, maximum and minimum usage temperature, discharge time, etc.
- Heating function: Help to charge and discharge safely at low temperature.
- Store function: Automatic discharge to storage capacity

Copyright©JOUAV21

## 7. Operation guidance lock

- Short press the function button, the smart battery system wakes up and displays the battery power. When charging, short press the function button once, the status indicator flashes to indicate the charging status. When discharging, short press the function button once, the status indicator flashes to indicate discharge status. While resting state, short press the function button once, without any operation, the status indicator will flash for 30s and the system will automatically shut down.
- Short press the function button when displaying the power, if the smart battery power is lower than 20%, it will keep 30s alarm reminder (LED4 flashing regularly).
- When the smart battery system wakes up, and the state indicator is flashing, it can enter the heating mode by pressing the button twice continuously, which will preheat the battery.
- When the smart battery system wakes up, it can enter the storage mode by pressing the button 3 times continuously when the status indicator flashes, The smart battery reaches the proper storage capacity through self-discharge and automatically sleeps after completion.
- Long press the function button it will terminate all current modes of smart battery, smart battery enters the sleep state.
- After putting into the aircraft, the automatic establishment of communication, the ground station can view the battery information.

Copyright©JOUAV

## 8. LED Status Indicator

Status indicator can be used to display the battery charge and discharge process and other functional status, the indicator is defined as follows:

● Indicates that the LED lamp is always on during the indicating process

Indicates that LED lamp flashes regularly during the indicating process

○ Indicates that LED lamp is off

| LED4 | LED3 | LED2 | LED1 | FUNCTIONAL STATUS |
|---|---|---|---|---|
| ☀ | ☀ | ☀ | ☀ | POWER 100%-80% |
| ○ | ☀ | ☀ | ☀ | POWER 80%-60% |
| ○ | ○ | ☀ | ☀ | POWER 60%-40% |
| ○ | ○ | ○ | ☀ | POWER 40%-20% |
| ☀ | ○ | ○ | ○ | LOW VOLTAGE ALARM |
| ○ | ○ | ○ | ● | HEATING MODE |
| ○ | ○ | ● | ○ | STORE MODE |
| ● | ● | ● | ● | CHARGING 80%-100% |
| ☀ | ● | ● | ● | CHARGING 60%-80% |
| ○ | ☀ | ● | ● | CHARGING 40%-60% |
| ○ | ○ | ☀ | ● | CHARGING 20%-40% |
| ○ | ○ | ○ | ☀ | CHARGING 0%-20% |

Copyright©JOUAV23

## The Function and Usage of GCS-202

### 1. Function of GCS-202

GCS-202 integrated with WiFi module, radio module and battery module. And the accessories are data link antenna, WiFi antenna, charger and the cable for external battery. It can work at most 6h with built-in battery.

Tripod is used for installing the GCS-202. If the GCS-202 is installed at a known point, make sure the height of GCS-202 is measured before flight. And the height should be as the picture shows.

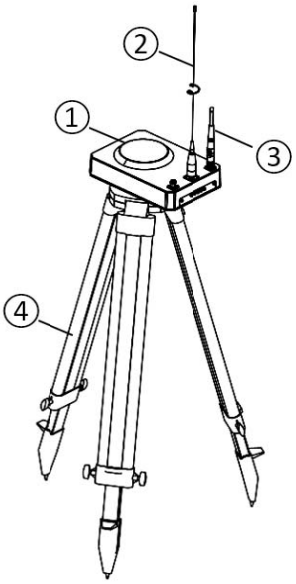


① GCS-202

② Data Link Antenna

③ WiFiAntenna

④ Tripod

*Slant height is the distance from long side of upper surface of GCS-202 to known point.*

After power on the GCS-202, it will create a Wi-Fi, which is used for connecting between CGS-202 and the laptop. The setting about network as blow:

| | |
|---|---|
| WiFi Name | GCS202-1909XXXX |
| WiFi Password | 1909XXXX |
| IP | 10. 10. 100. 254 |
| Port | 2010 |

### 2. Charge of GCS-202

There is a charger for GCS-202, which is connected AC power and GCS-202 for charging. And there is a signal light of charging status.

| | |
|---|---|
| Connected between GCS-202 and charger | Green |
| Charging | Red |
| End of charge | Green |

A three cells LiPo battery can provide more work time for GCS-202. If you need to use the

external battery, make sure the built-in battery and the external one are full charged, and connect the external battery before power on the GCS-202. If the voltage is lower than 11. 2V, the GCS-202 will beep to remind you.

*Only three cells LiPo battery which can be used as external battery.*

## CW Commander Ground Station Software

There is a CW Commander software with CW Series UAV, which is used for checking aircraft, setting parameters, creating the flight plan, sending mission command, and so on.

All the operations about CW Commander, please refer to《CW Commander Manual》.

## Accessories

There are some software and cables for downloading data and update, such as autopilot recorder, autopilot update, GCS-202 update, PPS Process, RS-232 cable and RS-422 cable.

The usage of these software refers to it's manual.

Copyright©JOUAV25

## The Default Parameters

Make sure all parameters have been checked before flight. And change some parameters if it's necessary. For CW-20, the default parameters as blow('/'means no need to change) :

**Take off and Landing Set**

| Item | Default | Range | Adjusting Condition |
|---|---|---|---|
| Minimum AGL | 20 | 15-50 | Increase if there is obstacle |
| Climb Coe. | 1. 1 | 1. 1-1. 2 | High elevation |
| Lateral Deviation | 10 | >10 | Go around if lateral deviation is too much |
| Height Deviation | 10 | >10 | / |
| Clarify Acc. | 1. 1 | / | / |
| Deceleration Length | 150 | / | / |
| Landing Height | 25 | 15-50 | Increase if there is obstacle |
| Cruise Speed | 19 | / | / |
| Climb Speed | 18 | / | / |

**Emergency Parameters**

| Item | Default | Range | Adjusting Condition |
|---|---|---|---|
| Min. Altitude | 660 | Higher than ground about 50m | Increase if there is obstacle |
| Max. Altitude | 6000 | Higher than Min. Altitude | It all depends |
| Line Safe Height | 0 | It all depends | It all depends |
| Min. Terrain Alt. | 70 | It all depends | It all depends |
| Timeout Limit | 10min | It all depends | It all depends |
| Flight Return | 0 | As total flight time | It all depends |
| Timeout Landing | 2min | / | / |
| *All items have been chosen except Line Safe Height, Min. Terrain Alt., Flight Return. | | | |

Copyright©JOUAV

# CW-007 II Operation Procedure

We suggest that the aircrew consists of 1 or 2 people, and the aircrew operate this UAV system as blow procedures. One of them who in charge of the ground control station, the rest people who check the aircraft and prepare for the emergency situation. And only one person can also finish all the operation.

## Preparing

**Battery:**Make sure all the batteries are full charged, including aircraft, radiocontroller, GCS-202, laptop, external battery for GCS-202.

**CWCommander:**Load the map of mission area. Create the flight plan and check the elevation before flight to save time when you're outside.

**Aircraft:**Confirm no damageduring storage or transportation, and allcomponents are correctly positioned in the backpack case.

*Do not put desiccant and other little things into the flight case when transport the case.*

## GCS-202 Installation

Confirm the WiFi antenna and the data link antenna are fixed, and then install the GCS-202 to the tripod. If it's needed, connect the external battery to increase work time. And then, power on the GCS-202.

Measure the slant height or connect the fiber glass antenna if it's needed.

*The GCS-202 should be far from ground, vehicles, buildings.*

Copyright©JOUAV27

## Assembly and Check

**1. Assembly**

Open the flight case, assemble the aircraft as the procedures

**2. Check Aircraft**

**Fuselage:**The body and wings are no damages. The screw holes of wings and tails are no damages. All cabin lids and hinges are no damages.

**Pitot:**The pitot is fixed. No break, no blockage.

**Assembly:**Rotors' arm are fixed and correct, cabin lids are fixed, wings are fixed.

**Control Surfaces:**All the control surfaces are no damages, all the servos are fixed, the connecting between servos and control surfaces are fixed.

**Rotors Power:**The rotors are fixed, propellers are no damages and fixed.

**Forward Power:** Propeller no damage, and the cover is locked tightly.

**Avionics:**All the connectors and cables of autopilot, engine, and rotors are no damages. Payload is fixed.

**Antennas of Aircraft:**The data link antenna and others are fixed.

**3. Battery Installation**

Install the batteries and payload after checking the aircraft. Then, power on the autopilot.

## GCS Check and Mission Plan

⚠ *Make sure the Radio Controller in ATT. Mode before power on the autopilot. If you don't have any experience about RC, you can switch off the RC. And skip all the steps about the RC.*

**1. Check Parameters and Status**

**Common Status:**Telemetry is good, RC status is correct, sensor self-check passed, aircraft's position is correct, instrument attitude is correct.

**Batteries:**The main power and GCS power are enough for flight, the servo power is about 6V.

**Airspeed:**Airspeed should be 0 or almost same with the wind speed.

Copyright©JOUAV

**Take Off and Landing Set:** Minimum AGL and Landing Height are depending on flight site. If the ground elevation is higher than 2000m, increase the Climb Coe., and normally we don't have to change other parameters.

**Emergency Parameters:**Make sure the Min. Altitude is correct, and change other parameters if you need.

**Task Setting:**Confirm the Spacing or Timing, and make sure the Hold Time is correct.

**2. Compass Calibration**

We suggest calibrating the compass before every flight if the flight site is changed. If you fly at the same place as last time, you don't have to calibrate but must check the compass in Pre-flight Check.

After calibration, save data to autopilot. If the Error is more than 10 degrees(which is in Objects), restart the autopilot and check again.

⚠ *When calibrating and inspecting the compass, keep the aircraft away from vehicles, iron towers, on the metal table or concrete floor with steel bars.*

**3. Create Flight Plan**

If the flight plan has been created before mission, you can import the plan, and make sure the spacing or timing is correct.

Aftercreating flight plan, must adjust the waypoint 0, waypoint 1, the last but one(Penultimate)waypoint and the last waypoint. Check the height of flight plan, make sure the flight plan is higher than ground at least 100m, the last waypoint is higher than ground 100-150m.

Send the plan to autopilot after finish checking, and then request the flight plan to confirm it's correct.

**4. Create Landing Plan**

Make sure the landing direction is heading the wind and no obstacle. The landing plan area should be empty and far from the buildings, big trees, power towers and mountains.

The landing position should be clear and far from aircrew and tripod. And the aircraft will not fly over the people when it's taking off or landing.

After finishing the creating landing plan, must check the height of landing plan to make sure it's safe.

Copyright©JOUAV29

## Before Take Off

**Pre-flight Check:**Do the checklist one by one. Do not take off if any check items failed on the checklist.

**Before Take Off:**Remove the pitot cover, confirm the aircraft is heading the waypoint 1 and the wind direction. Make sure the surrounding is clear, switch the RC to AUTO mode. Then send Take Off command.

## After Take Off

After the aircraft lift off, the operatorneeds to monitor the flight data and status, as follows:

**Power:**The power system may not provide enough power for multi-rotor because the temperature is too low, elevation is too high, battery aging. And if that happens, the aircraft will land automatically. Either you can send “Abort” to make it land right now.

**Airspeed:**The airspeed should be same with the wind speed and stable when it’s climbing out. If the airspeed is increasing and more than 10m/s, that may was caused by pitot failure, and send “Abort” to land right now.

**Accelerating:** In the process of acceleration, if any abnormal conditions. Send “Abort” to make it force landing.

*Force landing, which means the aircraft transform from fixed wing to multi-rotor, and land at current position.*

**Others：** In multi-rotor working condition, other reasons for the need to abort the mission. Send “Abort” to make it force landing.

Copyright©JOUAV

## Flying

After aircraft goes to mission plan, please switch off the RC. And the operator of GCS should keep monitoring the flight status, especially the altitude, vertical speed, airspeed, ground speed, voltage, attitude, telemetry etc.

**Altitude:**The altitude should keep increasing during climbing up. If the aircraft lose height more than 20m, it will go back to waypoint 0. If the aircraft lose height and lower than Min. Altitude or lose height more than Safe Line Height, it will force landing. (If Safe Line Height has been chosen. )

**Vertical Speed:**The vertical speed should be a positive value during climbing up, and is the range of 2-4m/s usually. If it's negative value during climbing up, land the aircraft as soon as possible. The vertical speed should be near 0 during climbing up

**Airspeed:**The cruise speed is 19m/s, and the climb speed is 18m/s. The telemetry speed should be almost same with target speed.

📖 *The target airspeed is calculated by autopilot which based on the sea level and standard atmospheric pressure(Indicating airspeed/IAS). The autopilot can calculate the altitude and automatically modify the airspeed. So the target airspeed should be higher with the altitude increasing (true airspeed/ TAS). The telemetry speed should be almost same with target speed*

**Ground Speed:**The ground speed should change with wind speed. If the difference between ground speed and wind speed is more than 10m/s, that means the wind is too strong, and we suggest to cancel the mission and land.

**Voltage:** The full voltage of main power is 25. 2V, land if it's lower than 21. 6V. The voltage of servo power is 5. 5-6. 0V normally. If the main power is lower than return voltage more than 10s, the aircraft will go back to waypoint 0 automatically

**Attitude:**The maximum roll angle should be less than 35 degrees, the maximum pitch angle should be less than 15 degrees. If it is not, the software will show you red color on attitude to remind.

Copyright©JOUAV31

**Data Link:**If the data link is disconnected, the RX will stop increasing which on the CWCommander. If the time after disconnected data link is more than time out limit setting, aircraft will return to waypoint 0. If the aircraft is far from the take off point more than 1km and the flight time is more than timeout return setting, it will return to waypoint 0. If the data link is disconnected more than timeout landing setting and it's far from the landing point less than 2km, it will trace to the landing plan and land automatically.

## Landing

Before landing, the operator should confirm the status, such as landing command, APmode, altitude, target waypoint, rotors power.

The pilot should confirm the RC is auto mode, and keep the throttle minimum, then switch on the RC, push the throttle to middle. And confirm the control status is RC Normal and throttle is about 50% with operator of GCS.

*If the wind directions has changed, press shift and left button of mouse to choose the waypoint 797, and then rotate the landing plan.*

After sending "Landing" command, the operator should pay attention to altitude, rotors power and APmode. In addition, data and conditions need to pay attention, as follows:

**Fixed Wing Status:**If the altitude of aircraft is lower than Landing Height, it will force landing. If the aircraft is always going around, increase the Lateral Deviation.

**Multi-rotor Status:**While the aircraft is hovering but not descending, it will land after 20s if the distance between aircraft and landing point is no more than 10m. and it will force landing after 1min if the distance is more than 10m. Either you can send "Landing" command to land it.

**Touch Ground:**After touching ground, keep the throttle minimum, and switch the RC to ATT mode. If the propeller keeps running and not stop, send "Abort" to stop it.

## After Landing

After landing, disconnect the rotors power and engine power, switch off the RC. And then download the POS data if it's needed.

⚠ *Must download POS data before power off the autopilot, or the next flight will cover the last POS data. If the autopilot is off, you can input photo number manually. And we suggest downloading the rover data and base data after every flight.*

## Data Download

1.Download POS data from Airborne

- Step 1: when the UAV is power off, use the data download cable to connect the computer and the UAV. The data download cable is adjusted to Norm-422

- Step 2: open the Recorder software, select the serial number and set the baud rate by default.
- Step 3: power on the UAV, and after 5 seconds, switch Norm to Boot.

Copyright©JOUAV33

- Step 4: click "connect", the download unit appears after the connection is established, find the download unit corresponding to the flight period, and enter the number of the unit into "unitto download" below.
- Step 5: click the "start" button and wait for the download to complete.

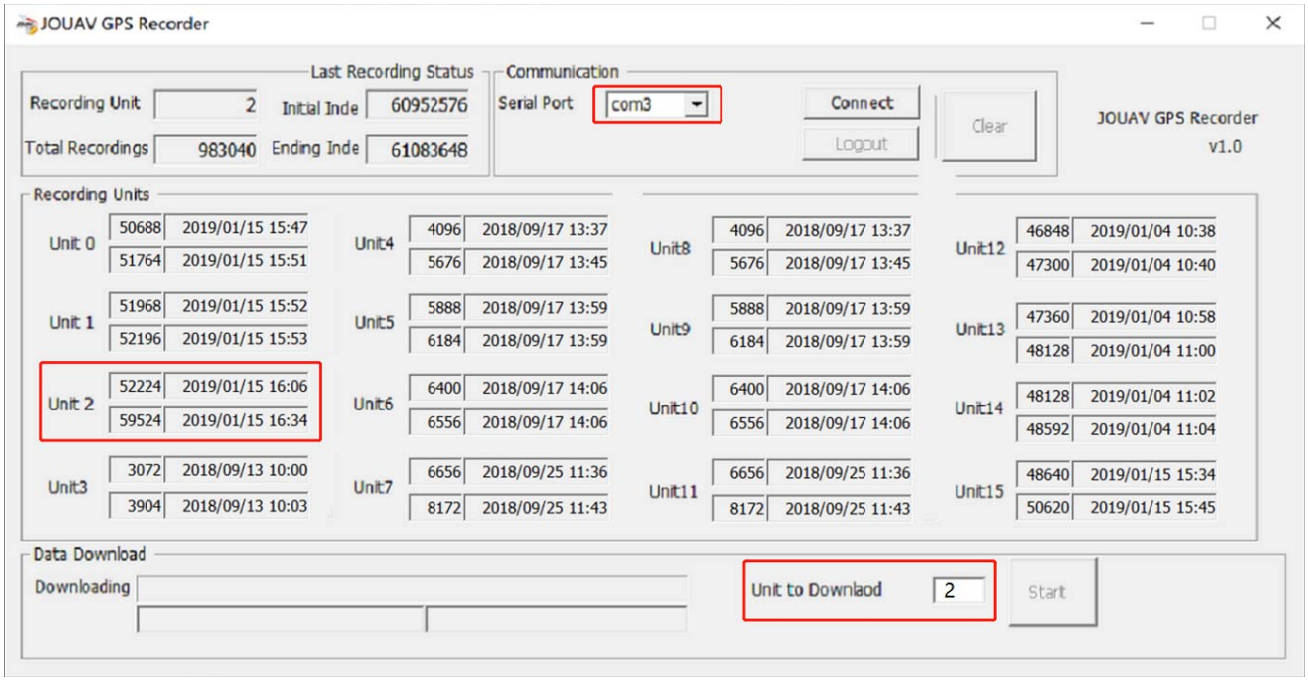


- Step 6: after the download is completed, enter the next required download unit number to download. After downloading all the data, click "Logout" to disconnect the data download cable.
- Step 7: power off the UAV, finish the download
  - The downloaded file is named “rover” beginning file, which is stored in the output folder in the directory of Recorder software.

Note:

1. After downloading, the recorder should be restarted before it can be used again.

2.Download POS data from GCS-202

- Step 1: when the ground station is shut down, connect the computer and ground base station with the data download cable, and adjust the data download cable to Norm-422

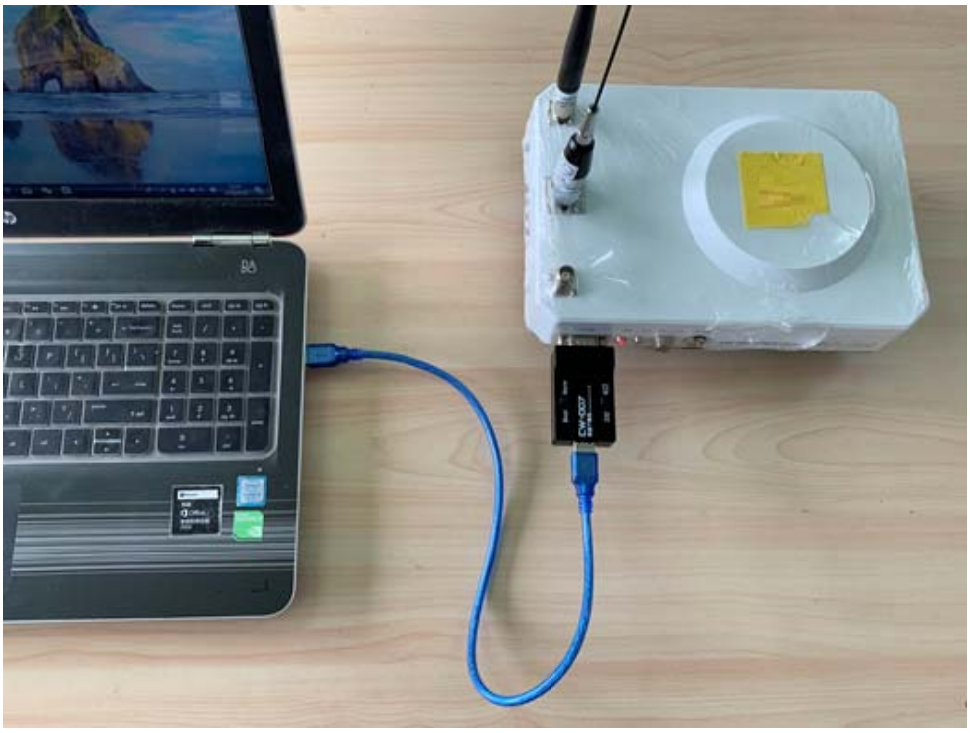

- Step 2: open the Recorder software, select the serial number and set the baud rate by default
- Step 3: start up the ground station and click "connect".
- click "connect", the download unit appears after the connection is established, find the download unit corresponding to the flight period, and enter the number of the unit into "unit to download" below.
- Step 5: click the "start" button and wait for the download to complete.
- Step 6: after the download is completed, enter the next required download unit number to download. After all data is downloaded, the software can be closed directly.
- Step 7: shutdown the ground station, disconnect the data download cable, and finish the download.
    - The downloaded file is named “base” beginning file, which is stored in the output folder in the directory of Recorder software.

Copyright©JOUAV35

Note:

1. After downloading, the recorder should be restarted before it can be used again.
2. After downloading the data, power off the autopilot, and then clean the aircraft, disassemble the aircraft and put into backpack case correctly.

Copyright©JOUAV

# Maintenance and Update

Suggest take flight practice at least once a month to maintain operational proficiency.

## Fuselage Maintenance

- Clean the fuselage after every flight. Cover the pitot when storing the aircraft.
- Keep the case is dry when storing.

## Battery Maintenance

- The storage wet is 65±20%, storage temperature is -20℃-35℃.
- Storage time no more than 7 days if the voltage is higher than 3. 9V/Cell.
- Every 3 months cycle the battery while storing.
- Normally, the discharge capacity will diminish after 100 cycles.
- If the discharge capacity diminishes too much, discharge the battery, and soak it in salty water, then send it to recycle bin.
- Use in low temperature or high elevation place, make sure warm the battery up before taking off and keep it warm during flying.

Copyright©JOUAV37

## Aircraft and Accessories Update

### 1. Autopilot

The customer will receive the update file from JOUAV if it is need to be updated. We suggest updating the autopilot immediately if customer receive the update.

### 2. CWCommander

If there is new version of CWCommander, the software will remind you when you start it. And if you choose update, it will download and install automatically.

### 3. GCS-202

We will send the update to customer if it's needed to be updated. And we suggest updating immediately.

### 4. Others

The POS processing software, update software and so on. We will send to customer if there is new version.

**For CW-007/GCS-202 (Unmanned Aerial Photography UAV)**
**FCC Statement:**
Any Changes or modifications not expressly approved by the party responsible for compliance could void the user's authority to operate the equipment.
This device complies with part 15 of the FCC Rules. Operation is subject to the following two conditions:
(1) This device may not cause harmful interference, and
(2) This device must accept any interference received, including interference that may cause undesired operation.
**FCC Radiation Exposure Statement:**
This equipment complies with FCC radiation exposure limits set forth for an uncontrolled environment. This equipment should be installed and operated with minimum distance 20cm between the radiator& your body.

Note: This equipment has been tested and found to comply with the limits for a Class B digital device, pursuant to part 15 of the FCC Rules. These limits are designed to provide reasonable protection against harmful interference in a residential installation. This equipment generates, uses and can radiate radio frequency energy and, if not installed and used in accordance with the instructions, may cause harmful interference to radio communications. However, there is no guarantee that interference will not occur in a particular installation. If this equipment does cause harmful interference to radio or television reception, which can be determined by turning the equipment off and on, the user is encouraged to try to correct the interference by one or more of the following measures:
—Reorient or relocate the receiving antenna.
—Increase the separation between the equipment and receiver.
—Connect the equipment into an outlet on a circuit different from that to which the receiver is connected.
—Consult the dealer or an experienced radio/TV technician for help.

Copyright©JOUAV