Technical Instructions

FCC Statement

This device complies with part 15 of the FCC Rules. Operation is subject to the following two conditions:

(1) This device may not cause harmful interference, and

(2) This device must accept any interference received, including interference that may cause undesired operation.

Any Changes or modifications not expressly approved by the party responsible for compliance could void the user's authority to operate the equipment.

Note: This equipment has been tested and found to comply with the limits for a Class B digital device, pursuant to part 15 of the FCC Rules. These limits are designed to provide reasonable protection against harmful interference in a residential installation.

This equipment generates uses and can radiate radio frequency energy and, if not installed and used in accordance with the instructions, may cause harmful interference to radio communications.

However, there is no guarantee that interference will not occur in a particular installation. If this equipment does cause harmful interference to radio or television reception, which can be determined by turning the equipment off and on, the user is encouraged to try to correct the interference by one or more of the following measures:

-Reorient or relocate the receiving antenna.

-Increase the separation between the equipment and receiver.

-Connect the equipment into an outlet on a circuit different from that to which the receiver is connected.

-Consult the dealer or an experienced radio/TV technician for help.

This equipment complies with FCC radiation exposure limits set forth for an uncontrolled environment. This equipment should be installed and operated with minimum distance 20cm between the radiator & your body.

IC Caution

The device meets the exemption from the routine evaluation limits in section 2.5 of RSS 102 and compliance with RSS-102 RF exposure, users can obtain Canadian information on RF exposure and compliance.

This device contains licence-exempt transmitter(s)/receiver(s) that comply with Innovation, Science and Economic Development Canada’s licence-exempt RSS(s). Operation is subject to the following

Internal Material — Not for External Distribution

two conditions:

(1) This device may not cause interference.

(2) This device must accept any interference, including interference that may cause undesired operation of the device.

This equipment should be installed and operated with a minimum distance of 20 cm between the radiator and your body.

Le dispositif rencontre l'exemption des limites courantes d'évaluation dans la section 2.5 de RSS102 et la conformité à l'expostion de RSS-102 rf, utilisateurs peut obtenir l'information canadienne sur l'exposition et la conformité de rf.

L’émetteur/récepteur exempt de licence contenu dans le présent appareil est conforme aux CNR d’Innovation, Sciences et Développement économique

Canada applicables aux appareils radio exempts de licence. L’exploitation est autorisée aux deux conditions suivantes:

(1) L’appareil ne doit pas produire de brouillage;

(2) L’appareil doit accepter tout brouillage radioélectrique subi, même si le brouillage est susceptible d’en compromettre le fonctionne.

Internal Material — Not for External Distribution

Model: MP-202S-01

Vehicle model name: 310S EXP

Manufacturer name and address:

SAIC-GM-Wuling (SGMW)

No. 18 Hexi Road, Liunan District, Liuzhou City, Guangxi, China

Contact person: Huanruan.qin@sgmw.com.cn

yuanlei.liang@sgmw.com.cn

Internal Material — Not for External Distribution

PATEO R&D INNOVATION

Technical Instructions

Entertainment System Head Unit (HU)
Compiler: Gu Zhao
Version: V1.0
Date: 03/01/2025

Internal Material — Not for External Distribution

Version History

Version	Version Date	Compiled by	Content
V1.0	03/01/2025	Gu Zhao	Initial version

Internal Material — Not for External Distribution

CONTENTS

1 System Introduction 7

2 System Block Diagram 7

3 Component Description 8

4 Connector Information 9

4.1 HU Connector 9

4.1.1 ISO Connector 9

4.1.2 HU to Entertainment Screen LVDS Connector 12

4.1.3 USB Interface (User) 12

4.1.4 USB Interface (External DAB) 13

4.1.5 USB Interface (External T-Box) 14

4.1.6 GPS Antenna Interface 14

4.1.7 Radio Antenna Interface Definition 15

5 Product Performance Requirements 15

- SoC 17
- MCU 17
- Frequency Band Information 18

Internal Material — Not for External Distribution

1 System Introduction

This entertainment system HU is designed based on the Sunplus system and integrates basic features, e.g., CAN Network Management (CanNm), CAN diagnostics / flash, power management, and secure authentication; entertainment features, e.g., radio, Bluetooth (music and phone call), backup camera, mobile phone connectivity, and USB multimedia playback; vehicle control & equipment, e.g., backlight, and upgrade / update via USB, among others. The user can use the app software on the mobile phone to communicate with the module through wireless communication, etc. to realize the application of the above features; they can also realize features like direct / interactive control through the IVI display.

2 System Block Diagram

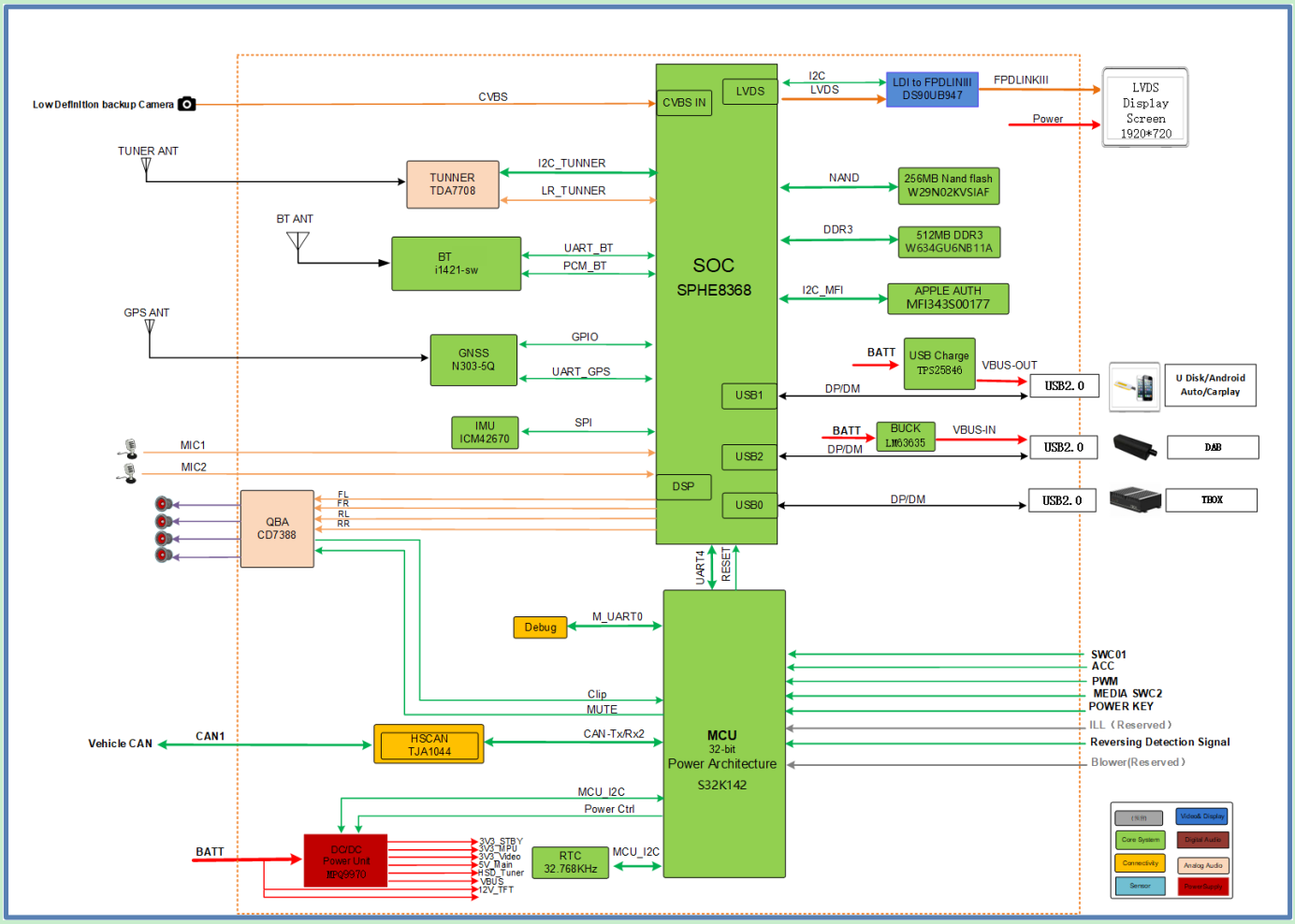

Internal Material — Not for External Distribution

3 Component Description

S/N	Name (Feature)	Supplier	Model	Operating Temperature	Storage Temperature
1	LVDS to FPD-Link III Bridge Device	TI	DS90UB947TRGCRQ1	-40℃---105℃	-65℃---150℃
2	Microcontroller Module	NXP	FS32K142HRT0VLL	-40℃---105℃	-40℃---105℃
3	DC/DC Switching Regulator	MPS	MPQ2166GD	-40℃---125℃	-65℃---150℃
4	DC/DC Switching Regulator	MPS	MPQ9970GL-AEC1	-40℃---125℃	-65℃---150℃
5	Amplifier	TI	RC4558IDR	-40℃---85℃	-40℃---85℃
6	Linear Regulator	RICHTEK	RTQ2569-80GQW-QA	-45℃---125℃	-65℃---150℃
7	SoC	SUNPLUS	SPHE8368-C	-40℃---85℃	-55℃---150℃
8	Power Amplifier	CR MICRO	CD7388	-40℃---85℃	-55℃---150℃
9	Radio Tuner Chip	ST	TDA7708SCBTR	-40℃---85℃	-55℃---150℃
10	CAN Transceiver	NXP	TJA1044	-45℃---150℃	-55℃---150℃
11	Linear Regulator	TI	TLV70218DBVR	-55℃---150℃	-55℃---150℃
12	Operational Amplifier (Op Amp)	3PEAK	TP2261-TR	-40℃---125℃	-65℃---150℃
13	Power Switch	TI	TPS1H100AQPWPRQ1	-45℃---125℃	-45℃---125℃
14	Power Supply Chip	TI	LM63635DQDRRRQ1	-45℃---125℃	-65℃---150℃
15	Power Supply Chip	TI	TPS25846QWRHBRQ1	-45℃---125℃	-65℃---150℃
16	Linear Regulator	RICHTEK	RTQ2510N-QTB	-45℃---125℃	-45℃---125℃
17	Linear Regulator	TI	TPS7A8101QDRBRQ1	-45℃---125℃	-45℃---125℃
18	NAND FLASH	Winbond	W29N02KVSIAF	-45℃---85℃	-65℃---150℃
19	DDR	Winbond	W634GU6NB11A	-40℃---95℃	-55℃---150℃
20	BT & Wi-Fi Module	BARROT	i1421-sw	-40℃---85℃	-55℃---125℃
21	GNSS Module	Techtotop	N303-5Q	-40℃---85℃	-40℃---125℃
22	IMU Module	InvenSense	ICM42670	-40℃---85℃	-40℃---125℃
23	MFi-Certified Chip	Apple	MFI343S00177	-25℃---70℃	-40℃---70℃

Internal Material — Not for External Distribution

4 Connector Information

4.1 HU Connector

4.1.1 ISO Connector

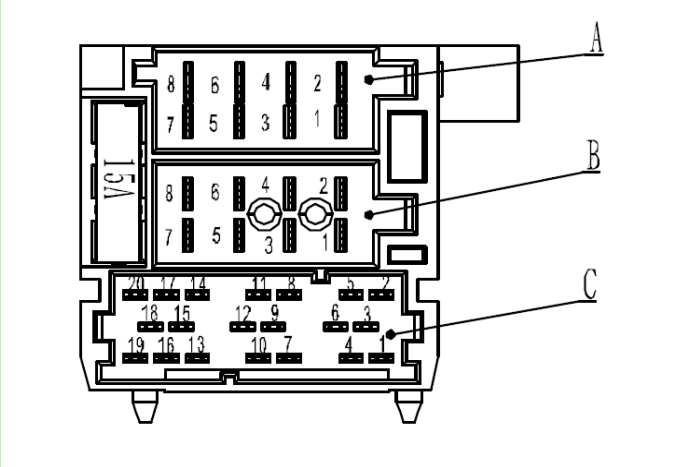

Model: 200-36022-0-15

ISO Connector Pin Details

Pin Number	Signal Description	Operating Voltage Range		Quiescent Current	Current Load under Stable Operating Conditions	Wire Harness Loop Requirements		
		Min.	Max.			Recommended Fuse Specifications	Loop Resistance	Special Cables (Twisted Pair / Shielded / Braided Cable) *
		(V)	(V)	(mA)	(A)	（A）	(mΩ)	
A1	Rear View Camera Power (RVC Power)	9	16		0.1			
A2	ACC Power ACCESSSORY(+)	3.6	16		0.01			
A3	Steering Wheel Control- (SWC1-)	-1	1		0.1			A3-Pin Shielded Cable and A4-Pin Cable
A4	Steering Wheel Control+ (SWC1+)	0.35	3.3		0.1			A3-Pin Shielded Cable and A4-Pin Cable
A5	Illumination- ILL(-) (Reserved)	-1	1		0.15			
A6	Illumination+ ILL(+) (Reserved)	4.6	16		0.15			

Internal Material — Not for External Distribution

A7	B+ Wire BAT+	9	16	2	10	15		
A8	Ground GND	-1	1		10			
B1	Rear Right Speaker+ (RR+)	4.5	8		2.5			B1-Pin and B2-Pin Twisted Pair Cables
B2	Rear Right Speaker- (RR-)	4.5	8		2.5			B1-Pin and B2-Pin Twisted Pair Cables
B3	Front Right Speaker+ (FR+)	4.5	8		2.5			B3-Pin and B4-Pin Twisted Pair Cables
B4	Front Right Speaker- (FR-)	4.5	8		2.5			B3-Pin and B4-Pin Twisted Pair Cables
B5	Front Left Speaker+ (FL+)	4.5	8		2.5			B5-Pin and B6-Pin Twisted Pair Cables
B6	Front Left Speaker- (FL-)	4.5	8		2.5			B5-Pin and B6-Pin Twisted Pair Cables
B7	Rear Left Speaker+ (RL+)	4.5	8		2.5			B7-Pin and B8-Pin Twisted Pair Cables
B8	Rear Left Speaker- (RL-)	4.5	8		2.5			B7-Pin and B8-Pin Twisted Pair Cables
C1	Left Microphone MIC+	7.2	8.8		0.001			Shielded Cable
C2	Multimedia Power Switch- (MEDIA SWC2-) (Reserved)	-1	1		0.1			
C3	Right Microphone MIC+	7.2	8.8		0.001			Shielded Cable
C4	Left Microphone MIC-	-1	1		0.001			Shielded Cable
C5	T-Box Mute / T-MUTE	0.9	1.1		0.1			
C6	Right Microphone MIC-	-1	1		0.001			Shielded Cable
C7	No Connection / NC	N/A	N/A		N/A			

Internal Material — Not for External Distribution

C8	External Power Amplifier MUTE/AMP MUTE (Reserved)	0	3.3		0.001			
C9	CAN High / CAN_H	2	4.5					Twisted Pair Cables
C10	Rear View Camera Ground (RVC Power GND)	-1	1					
C11	External Power Amplifier ACC / AMP ACC (Reserved)	9	16		0.01			
C12	CAN Low / CAN_L	0.5	3					Twisted Pair Cables
C13	Blower Test (+) / Blower+ (Reserved)	0	5		0.1			
C14	Amplifier Reference Right Channel- / AMP_REF_R (Reserved)	0	3.3		0.01			
C15	Amplifier Reference Left Channel- / AMP_REF_L- (Reserved)	0	3.3		0.01			
C16	Blower Test (-) / Blower- (Reserved)	0	5		0.1			
C17	Rear View Camera Signal (RVC CVBS+)	-0.3	0.7		0.1		75000	Copper braided mesh — shielding coverage ＞85%
C18	Amplifier Reference Right Channel+ / AMP_REF_R+ (Reserved)	0	3.3		0.01			
C19	Amplifier Reference Left Channel+ / AMP_REF_L+ (Reserved)	0	3.3		0.01			
C20	Rear View Camera Signal Ground (RVC CVBS-)	-1	1				75000	Copper braided mesh — shielding coverage ＞85%

Internal Material — Not for External Distribution

4.1.2 HU to Entertainment Screen LVDS Connector

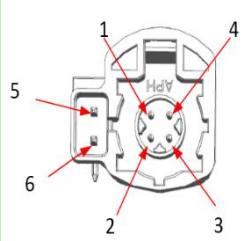

Model: HSDNBRPPCB7A

Connector Pin Details

Pin Number	Signal Description	Operating Voltage Range		Current Load under Stable Operating Conditions	Special Cables (Twisted Pair / Shielded / Braided Cable) *
		Min. (V)	Max. (V)	(A)	
1	Data 1+ Differential Signaling 1+	-0.05	1.15	10mA	Shielded Cable
2	Data 2+ Differential Signaling 2+	-0.05	1.15	10mA	Shielded Cable
3	Data 1- Differential Signaling 1-	-0.05	1.15	10mA	Shielded Cable
4	Data 2- Differential Signaling 2-	-0.05	1.15	10mA	Shielded Cable
5	POWER 12V	9	16	1.2A	5-Pin and 6-Pin cables are used for power supply. Use at least AWG23 cables (AWG number ≥23) to meet the current requirements.
6	GND	0	0	1.2A	

4.1.3 USB Interface (User)

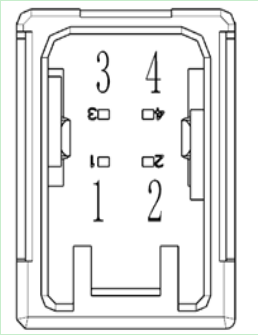

Schematic Diagram (See Definition Below for Details)

Model: 2290247-3

Internal Material — Not for External Distribution

USB Pin Details

Pin Number	Signal Description	Operating Voltage Range		Current Load under Stable Operating Conditions	Wire Diameter Requirements	Loop Resistance Requirements	Special Cables (Twisted Pair / Shielded / Braided Cables)
		Min.	Max.				
		(V)	(V)	(A)	(mm²)	(mΩ)	
1	USB_DATA-	0	3.3	0.1	0.35		Copper braided mesh — shielding coverage ＞ 85%
2	USB_DATA +	0	3.3	0.1	0.35		Copper braided mesh — shielding coverage ＞ 85%
3	USB_5V	4.75	5.25	2	0.5		Copper braided mesh — shielding coverage ＞ 85%
4	USB_GND	-1	1	0	0.5		Copper braided mesh — shielding coverage ＞ 85%

4.1.4 USB Interface (External DAB)

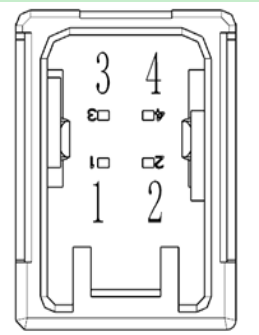

Schematic Diagram (See Definition Below for Details)

Model: 2290247-4

USB Pin Details

Pin Number	Signal Description	Operating Voltage Range		Current Load under Stable Operating Conditions	Wire Diameter Requirements	Loop Resistance Requirements	Special Cables (Twisted Pair / Shielded / Braided Cables)
		Min.	Max.				
		(V)	(V)	(A)	(mm²)	(mΩ)	
1	USB_DATA-	0	3.3	0.1	0.35		Copper braided mesh — shielding coverage ＞85%
2	USB_DATA +	0	3.3	0.1	0.35		Copper braided mesh — shielding coverage ＞85%
3	USB_5V	4.75	5.25	2	0.5		Copper braided mesh — shielding coverage ＞85%
4	USB_GND	-1	1	0	0.5		Copper braided mesh — shielding coverage ＞85%

Internal Material — Not for External Distribution

4.1.5 Interface (External T-Box)

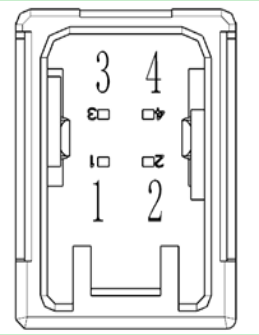

Schematic Diagram (See Definition Below for Details)

Model: 2290247-5

USB Pin Details

Pin Number	Signal Description	Operating Voltage Range		Current Load under Stable Operating Conditions	Wire Diameter Requirements	Loop Resistance Requirements	Special Cables (Twisted Pair / Shielded / Braided Cables)
		Min.	Max.				
		(V)	(V)	(A)	(mm²)	(mΩ)	
1	USB_DATA-	0	3.3	0.1	0.35		Copper braided mesh — shielding coverage ＞85%
2	USB_DATA +	0	3.3	0.1	0.35		Copper braided mesh — shielding coverage ＞85%
3	USB_5V	4.75	5.25	2	0.5		Copper braided mesh — shielding coverage ＞85%
4	USB_GND	-1	1	0	0.5		Copper braided mesh — shielding coverage ＞85%

4.1.6 GPS Antenna Interface

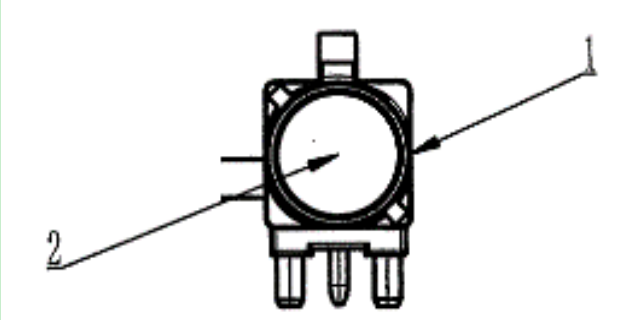

Model: FK1252CW-031-TLCP5G-50

Internal Material — Not for External Distribution

GPS Interface Details

Pin Number	Signal Description	Operating Voltage Range		Current Load under Stable Operating Conditions	Wire Diameter Requirements	Loop Resistance Requirements	Special Cables (Twisted Pair / Shielded / Braided Cables)
		Min.	Max.				
		(V)	(V)	(A)	(mm^2)	(mΩ)	
1	GPS ANT shield	-1	1				
2	GPS ANT signal	4.5	5.5	0.1		50	Braided Cable

4.1.7 Radio Antenna Interface Definition

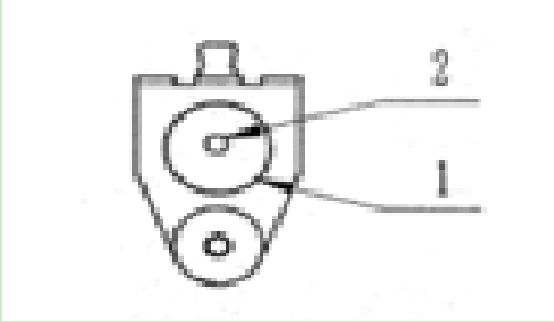

Model: ESTT-156-1

Radio Antenna Interface Details

Pin Number	Signal Description	Operating Voltage Range		Current Load under Stable Operating Conditions	Wire Diameter Requirements	Loop Resistance Requirements	Special Cables (Twisted Pair / Shielded / Braided Cables)
		Min.	Max.				
		(V)	(V)	(A)	(mm^2)	(mΩ)	
1	Shielded AM / FM Antenna Cable						
2	AM / FM Antenna Signal & Power	9	16	0.08		75	Braided Cable

5 Product Performance Requirements

Item	Performance Classification	Performance Requirements
Whole Equipment	Operating Voltage	DC9 ~ 16V
	Rated Voltage	DC 12V

Internal Material — Not for External Distribution

Technical Instructions

Item	Performance Classification	Performance Requirements
	Operating Temperature Range	-30℃ ~ +80℃
	Storage Temperature Range	-40℃ ~ +85℃
	Output Power	4×20W（4Ω，10%THD）@14.4V,1 kHz
	Quiescent Current	≤2.0mA
Bluetooth	BT Version	BT5.3
	Output Power	4±2dbm
	Frequency Range	2402 MHz ~2480 MHz
FM Mode	Frequency Range	Middle East & Africa & South America: 87.0 MHz-108.0 MHz Mexico: 87.7 MHz-107.9 MHz
	Manual & Automatic (Frequency) Step Tuning	Middle East & Africa: Manual — 100 kHz, Automatic — 100 kHz South America: Manual — 50 kHz, Automatic — 100 kHz Mexico: Manual — 10 kHz, Automatic — 10 kHz
	Noise Limited Sensitivity: 30dB	≤8dB uV
	Signal-to-Noise Ratio (SNR)	≥55dB
	Distortion	≤1.0%
	Seek Sensitivity	(23±6)dB uV
AM Mode	Frequency Range	Middle East & Africa: 531kHz-1629 kHz Mexico & South America: 530 kHz-1710 kHz
	Manual & Automatic (Frequency) Step Tuning	Middle East & Africa: Manual — 9 kHz, Automatic — 9 kHz South America: Manual — 1 kHz, Automatic — 5 kHz Mexico: Manual — 10 kHz, Automatic — 10 kHz
	Noise Limited Sensitivity: 20dB	≤30dB uV
	Signal-to-Noise Ratio (SNR)	≥50dB
	Distortion	≤1.0%
	Seek Sensitivity	(36±6)dB uV
USB	Standard USB Peripheral Interface	Support USB 2.0 interface
		Plug/Unplug Cycles: 3,000 (with feature)
		Support 64GB USB Flash Drive
	Audio File Type	MP3, WMA, ACC
	USB Charging	YES

Internal Material — Not for External Distribution

Item	Performance Classification	Performance Requirements
		Support iPhone, iPad, iPod and other Apple devices
		iPhone / iPod / iPad ≤2.1A
RVC	Signal	CVBS
	Trajectory Line	Static & Dynamic Trajectory Lines
Display	TFT Screen	10.25-inch (1920×960) / 256.75 (W) x 107.07 (H)
Mobile Phone Connectivity	Mobile Phone	Support Android Auto and CarPlay (Wired)

- **SoC**

  Arm Cortex processor

  Main frequency: 843 MHz

  LVDS / MIPI / RGB output interface

  Support CVBS input, up to 1280 × 720 resolution

  Support FHD (1080p) multimedia format decoding

  Built-in BC1.2 charging protocol

  Integrated ADC / DAC, built-in DSP, able to achieve sound effects

  Hardware EC/NR implemented inside SoC

  Interface: I2C, I2S, SPI, SDIO, USB, UART

  Support Linux operating system

  Operating temperature: -40°C~85°C

- **MCU**

  Supplier : NXP

  • Operating characteristics

  – Voltage range: 2.7 V to 5.5 V

  – Ambient temperature range: -40 °C to105 °C for HSRUN, -40 °C to 125 °C for RUN

  • ARM™ Cortex-M4F core, 32-bit CPU

  – Supports up to 80 MHz frequency with 100 Dhrystone MIPS

  – Configurable Nested Vectored Interrupt Controller(NVIC)

  – Single Precision Floating Point Unit (FPU) and Integrated Digital Signal Processor (DSP)

  Reliability, safety and security

  – HW Security Engine (CSEc)

  – Internal watchdog (WDOG) and External Watchdog monitor (EWM) module

Internal Material — Not for External Distribution

– System Memory Protection Unit (System MPU) with Error-Correcting Code (ECC) on flash and SRAM memories functions

– Cyclic Redundancy Check (CRC) module

- **Frequency Band Information**

	Band	Frequency Range
Frequency	Bluetooth	2402 MHz ~2480 MHz
	FM	87.0 MHz-108.0 MHz
	AM	530 kHz-1710 kHz

Antenna Type:	Integral Antenna
Antenna Gain:	2.97dBi
Type of Modulation:	GFSK, π/4-DQPSK, 8DPSK

Internal Material — Not for External Distribution