Machine Translated by Google

S6.6 Tire pressure sensor manual

Product name: SENSOR ASM-TIRE PRESS IND Type:TPMS-00-01

TPMS system solution

TPMS system description

Tire pressure monitoring system: It can monitor the tire pressure and temperature in real time, give an alarm for abnormal tire pressure and temperature, and remind users to keep

Maintain reasonable tire pressure (including sensor, controller)

The sensor is installed in the car tire to detect the pressure and temperature of the car tire; the controller is installed in the car body to receive the transmitted signal.

The sensor signal, and the tire data information is transmitted to the instrument for display through the CAN bus.

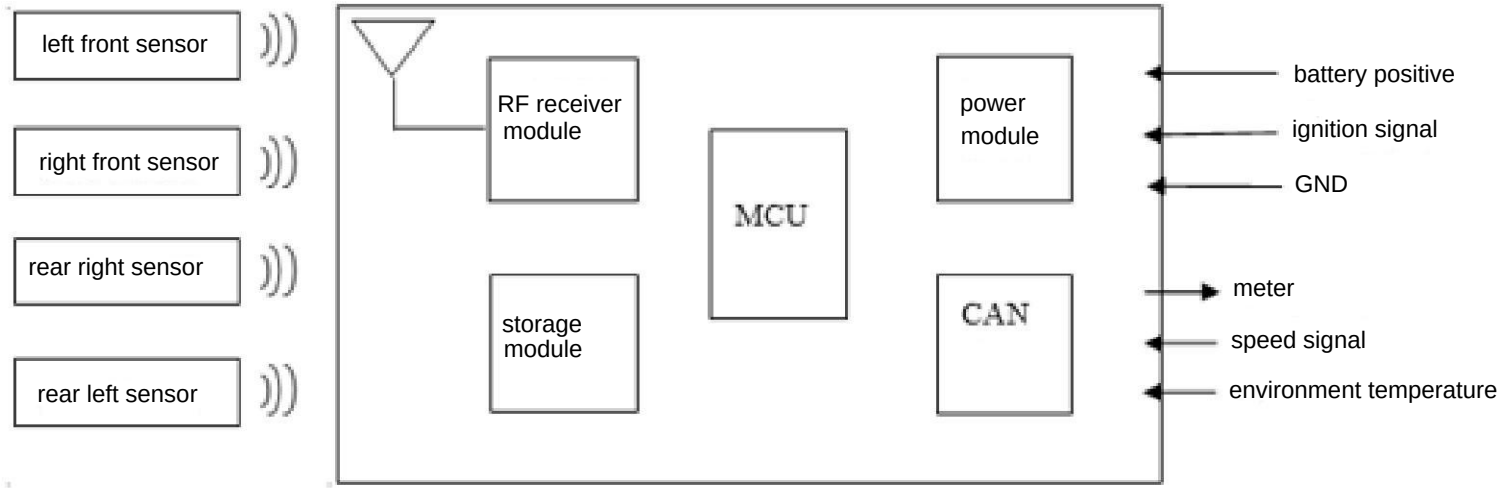

TPMS System Block Diagram

TPMS sensor

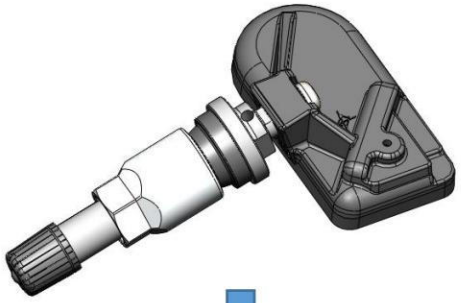

Control side integrator development

Table of contents

contents

01 S6.6 Product structure

02 S6.6 Performance parameters

03 S6.6 off-line installation

01 **S6.6 Product structure**

Machine Translated by Google

3D structure display

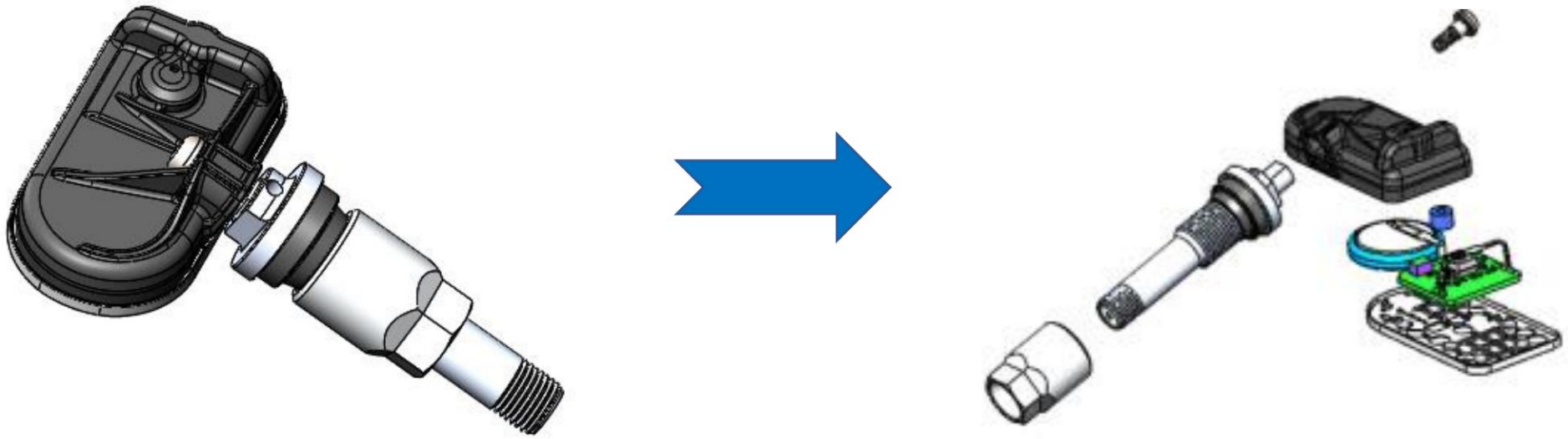

Machine Translated by Google

Sensor structure design

Describe the S6.6 structure		**illustrate**
Exterior		1. The battery is parallel to the PCB, and the overall appearance of the S6.6 structure is relatively wider and thinner; 2. The edge of the S6.6 structure shell is rounded, and the rib design is optimized to ensure the overall strength of the shell. At the same time, it reduces the risk of the shell being scratched by the bead during tire loading;
Valve		1. The valve angle is 20°, which can cover the rim mounting hole of 20°±5°; 2. The metal nozzle is sealed with an axial nut locking compression gasket; 3. The metal nozzle has excellent high-speed rotation performance; 4. The metal nozzle can be used in mass production Special installation tools are required;
size and weight	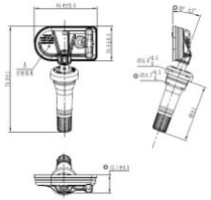	1. The overall size of the sensor is 75.5*47.3*13.1; 2. The thickness of the sensor is thinner, which reduces the risk of being scratched by the bead; 3. The structure of S6.6 is about 20.1g, and the overall weight is lighter;

Machine Translated by Google

02 **S6.6 Performance parameters**

Fundamentals of chip work

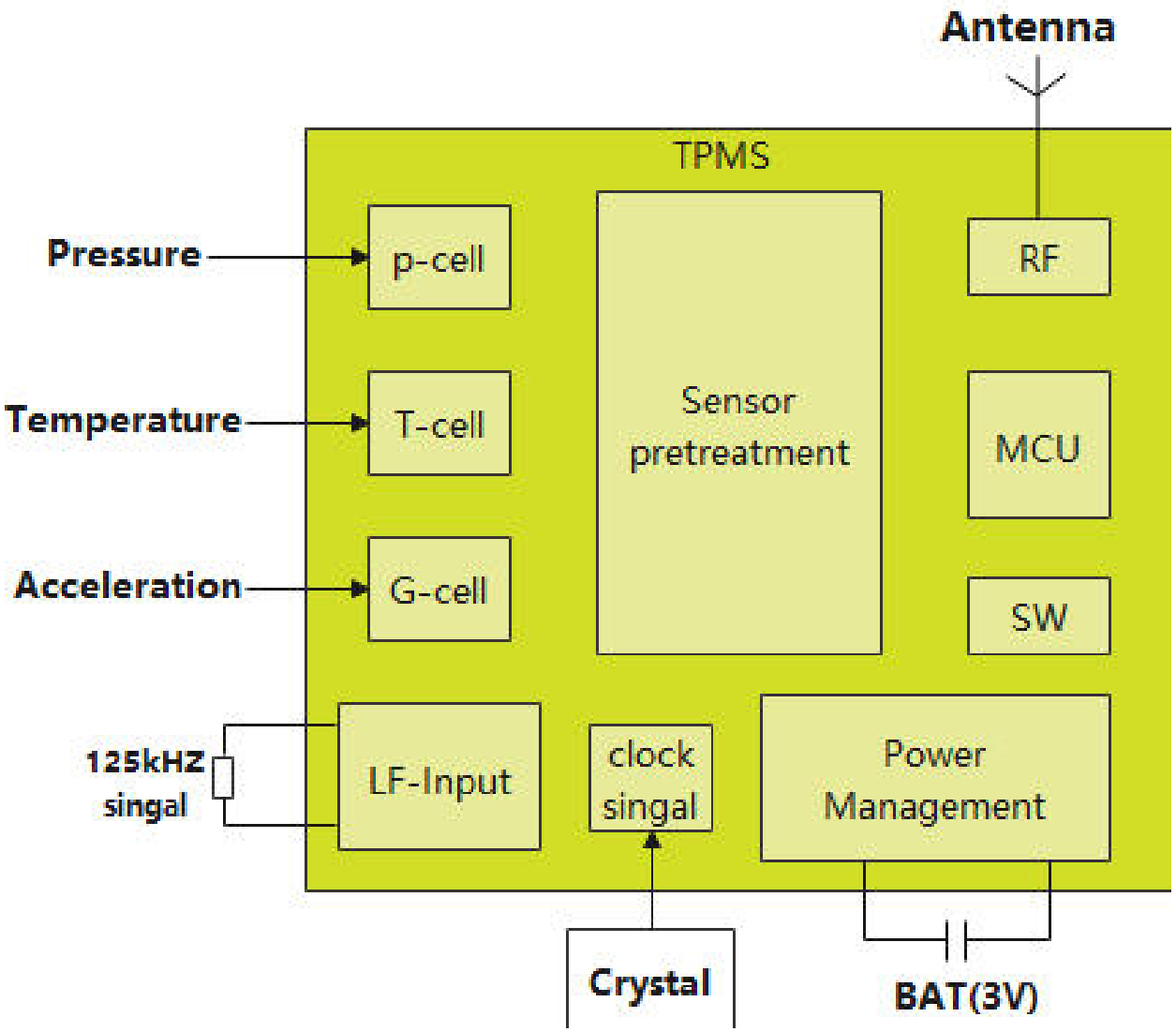

S6.6 Performance parameters

serial number	project	S6.6 Structure	Remark
1	Pressure range (kPa)	0~800	relative pressure
2	Working temperature (℃)	-40~+125	
3	Working voltage (V)	3	
4	RF frequency range (MHz)	433.05 - 434.79	
5	RF baud rate(bps)	9600	
6	Frequency deviation (kHz)	±45	
7	Power (dbm)	-1.78	ERP
8	RF center frequency (MHz)	433.92	
9	Quiescent current (μA)	0.1~1.0	
10	RF transmit current (mA)	1.0~9.0	

03 **S6.6 sensor installation**

S6.6 Sensor installation

Instructions for installing the sensor: 1. Hold the sensor, pass the valve through the rim hole, and pre-tighten the nut; (Picture 1) 2. Repeat step 1, pre-tighten 5pcs-6pcs rim (one layer of the pallet); 3. Hold the wrench with the left hand to clamp Hold the valve chassis or deflect it slightly to the right and stabilize it, and tighten the nut with an electric or manual torque wrench in your right hand. (Picture 2) Installation inspection: After installation, the sensor is in a positive parallel state with the arc of the rim, and the surface of the cover plate is not in contact with the arc of the rim. Then the installation is complete.

Picture 1

Picture 2

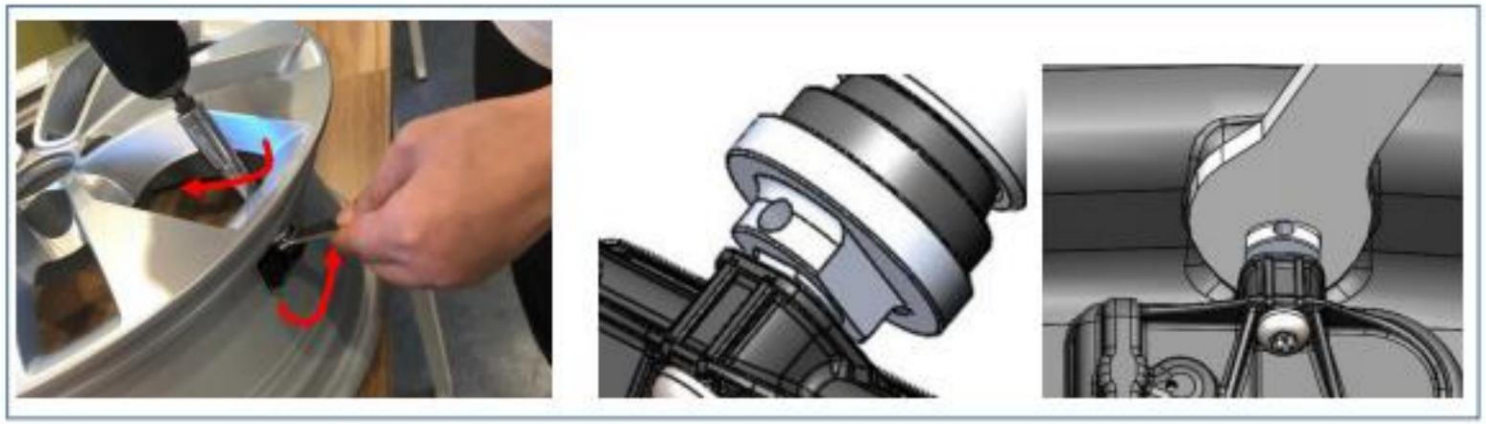

Remarks: For the detailed installation process, see the product installation instruction manual

Cautions:

5.1 It is not allowed to install the sensor on the unapproved rim;
5.2 Do not repeatedly install or disassemble the sensor;
5.3 Make sure that the rim is properly installed with sensors in good condition;
5.4 It is forbidden to damage the sensor during the whole installation and disassembly process;

FCC ID: 2AVYX-TMSS6A4

FCC statement

This equipment has been tested and found to comply with the limits for a Class B digital device, pursuant to Part 15 of the FCC Rules. These limits are designed to provide reasonable protection against harmful interference in a residential installation. This equipment generates, uses and can radiate radio frequency energy and, if not installed and used in accordance with the instructions, may cause harmful interference to radio communications.
However, there is no guarantee that interference will not occur in a particular installation.

• If this equipment does cause harmful interference to radio or television reception, which can be determined by turning the equipment off and on, the user is encouraged to try to correct the interference by one or more of the following measures:

Reorient or relocate the receiving antenna.

Increase the separation between the equipment and receiver.

Connect the equipment into an outlet on a circuit different from that to which the receiver is connected.

Consult the dealer or an experienced radio/TV technician for help.

This device complies with part 15 of the FCC Rules. Operation is subject to the following two conditions: (1) This device may not cause harmful interference, and (2) this device must accept any interference received, including interference that may cause undesired operation.

CAUTION: Any changes or modifications not expressly approved by the grantee of this device could void the user's authority to operate the equipment.

RF exposure warning

This equipment complies with FCC radiation exposure limits set forth for an uncontrolled environment.

This equipment must be installed and operated in accordance with provided instructions and the antenna(s) used for this transmitter must be installed to provide a separation distance of at least 20 cm from all persons and must not be co-located or operating in conjunction with any other antenna or transmitter.