GEEK CLUB

CircuitMess

INSTRUCTION MANUAL

NASA Perseverance rover
NASA Perseverance rover controller

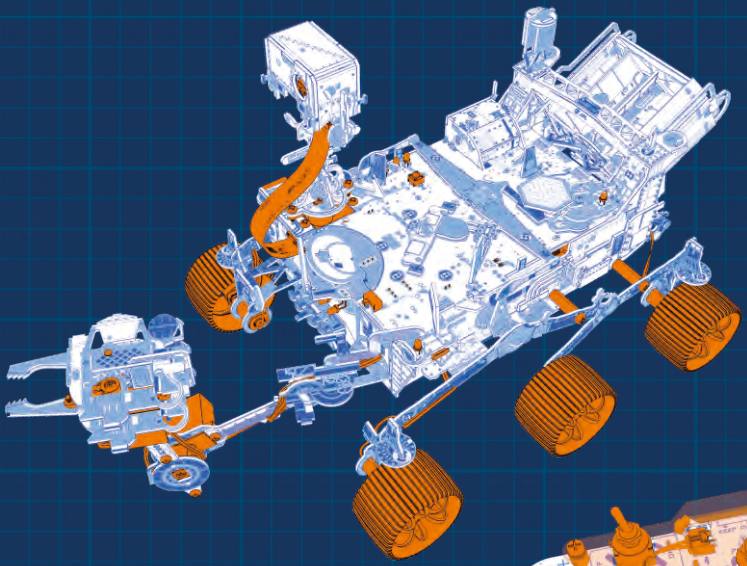

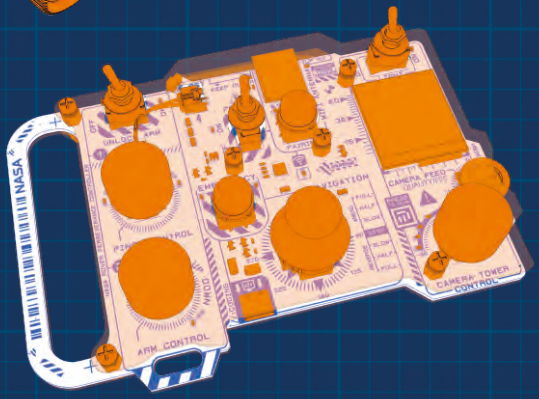

NASA Perseverance rover

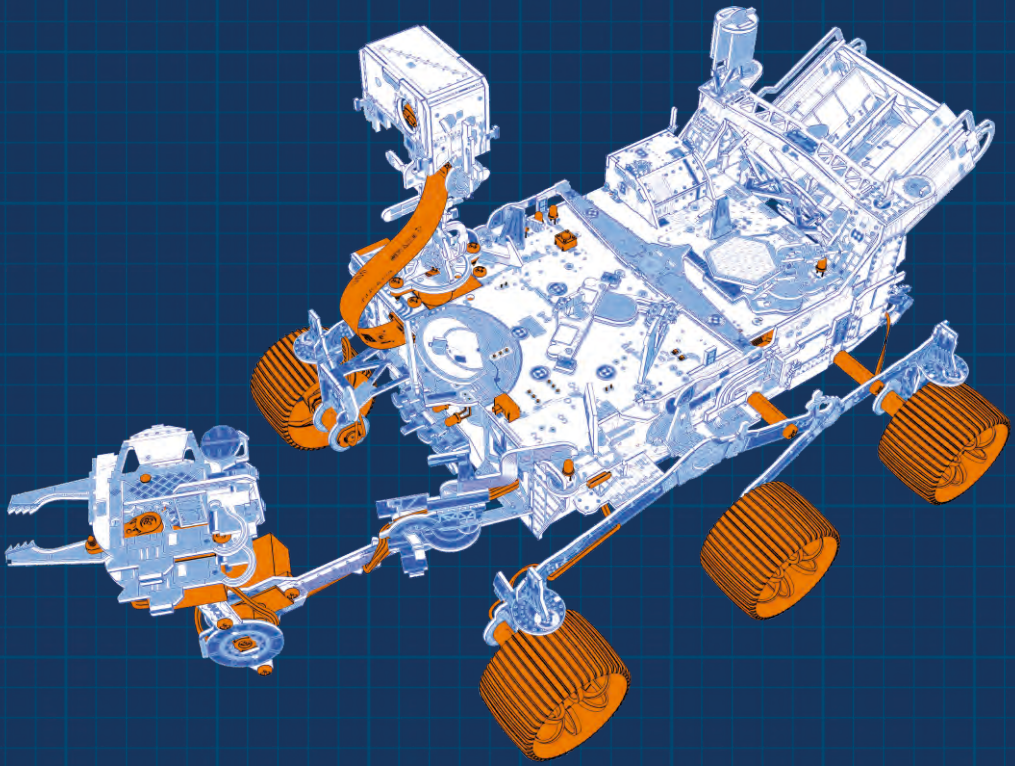

AI camera tower

Wheel branch

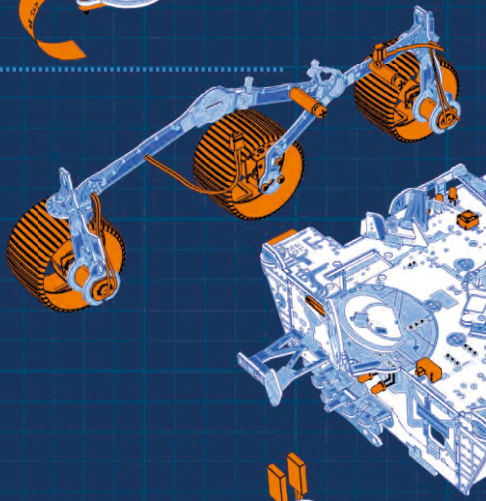

Arm pinch

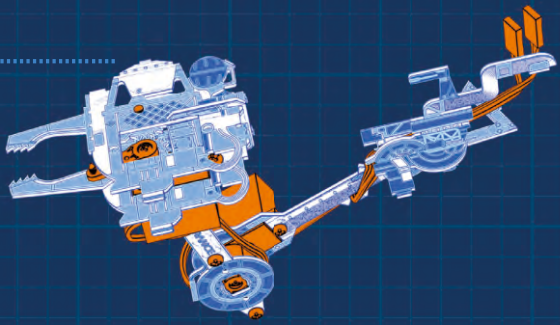

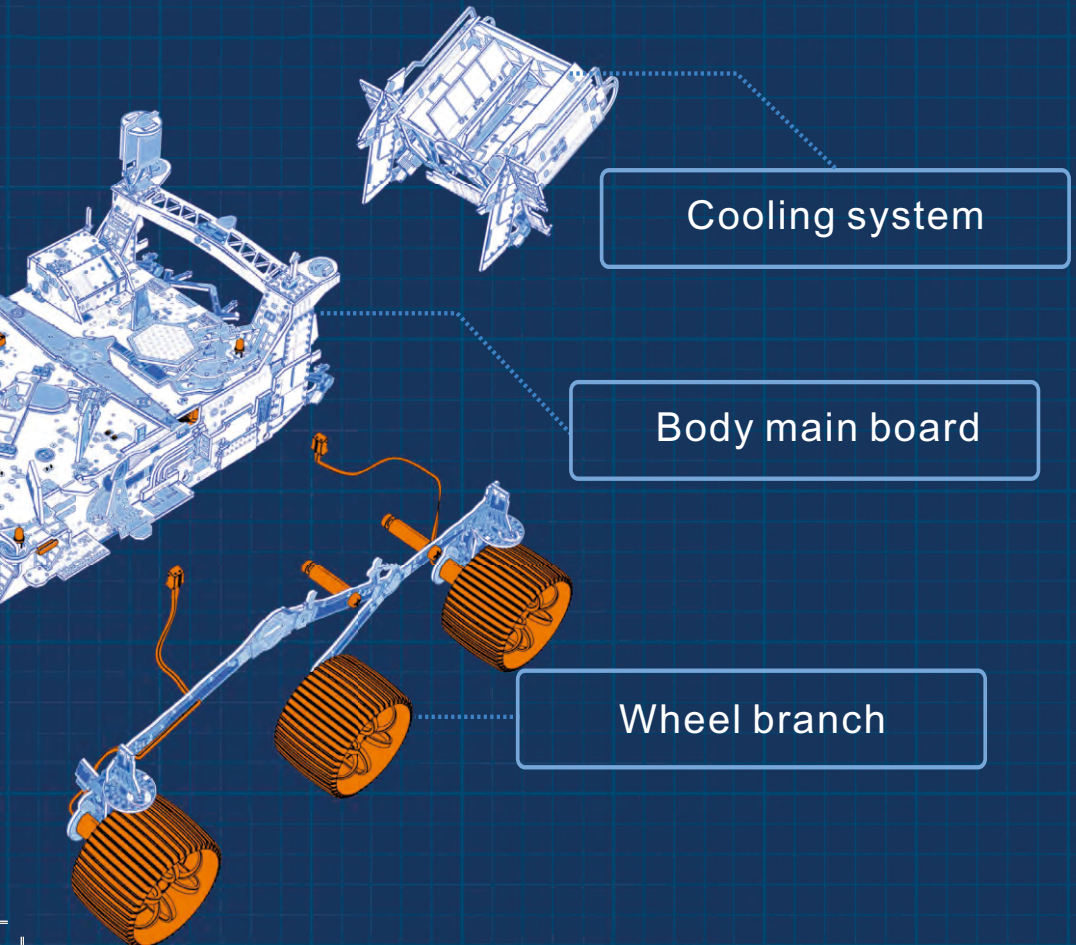
Cooling system
Body main board
Wheel branch

NASA Perseverance rover controller

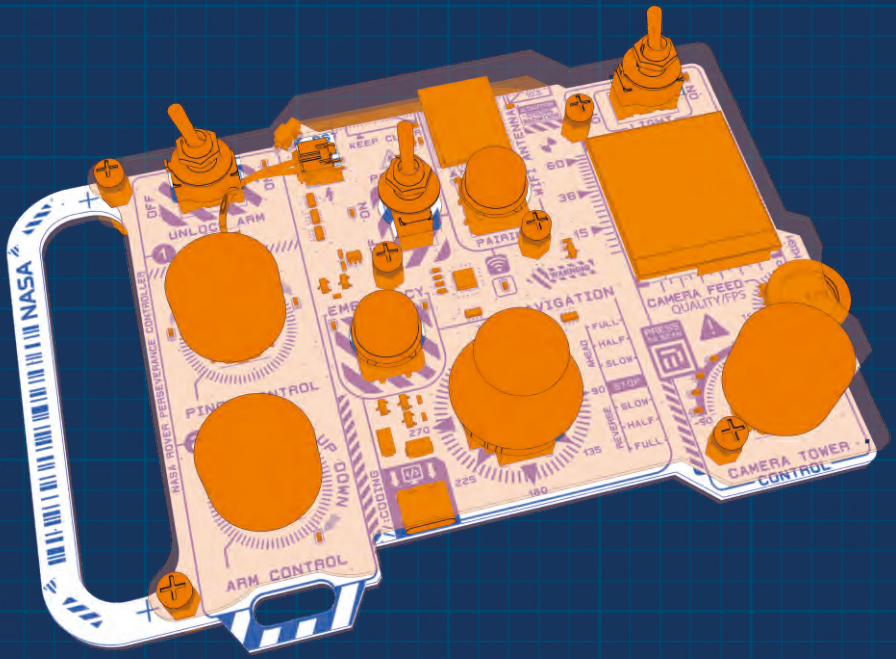

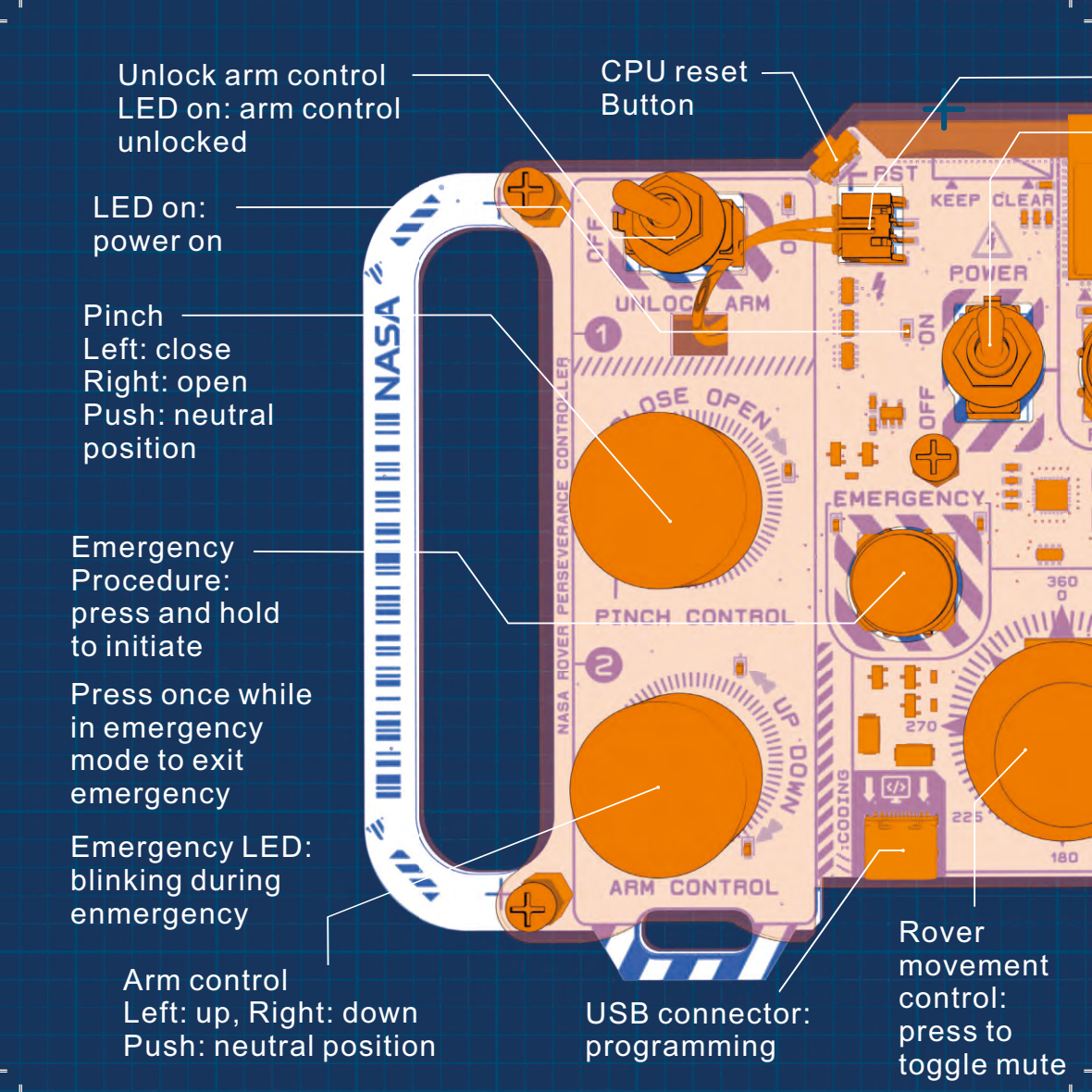
Unlock arm control
LED on: arm control
unlocked
CPU reset
Button
LED on:
power on
Pinch
Left: close
Right: open
Push: neutral
position
Emergency
Procedure:
press and hold
to initiate
Press once while
in emergency
mode to exit
emergency
Emergency LED:
blinking during
enmergency
Arm control
Left: up, Right: down
Push: neutral position
USB connector:
programming
Rover
movement
control:
press to
toggle mute
RST
KEEP CLEAR
POWER
ON
OFF
UNLOCK ARM
CLOSE OPEN
PINCH CONTROL
EMERGENCY
UP DOWN
ARM CONTROL
NASA
NASA ROVER PERSEVERANCE CONTROLLER
360
0
270
225
180

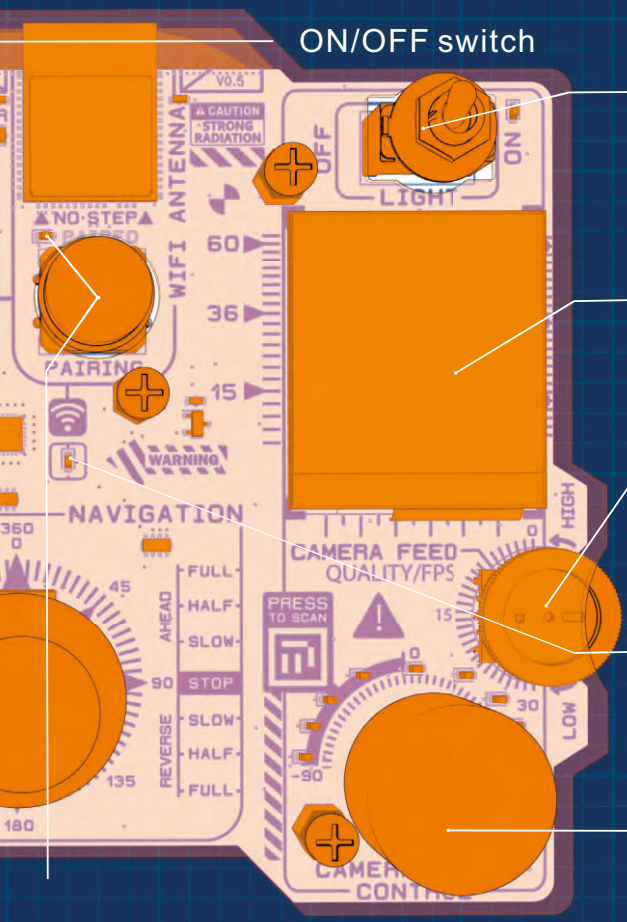

Battery connector

ON/OFF switch

Headlights switch
LED on:
headlights are on

TFT display

Camera quality/
framerate control

Warning LED

Battery <8% blinking
Battery <20 breathing

Camera tower control
Left: left
Right: right
Press: toggle marker
scanner

Pairing Button: hold to pair
Pairing indication LED:
Connected: breathing
LED OFF: not connected

How to connect the NASA Perseverance rover with controller

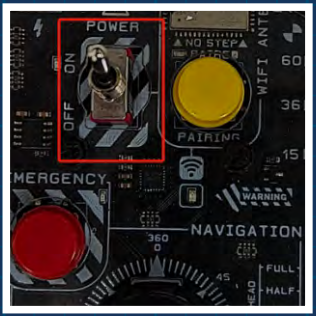

1. Turn on the controller

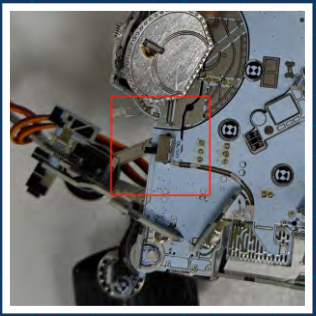

2. Turn on the NASA Perseverance rover

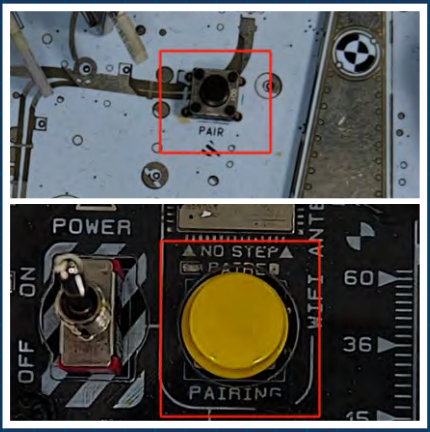

3. Press and hold the PAIR button on both the controller and the NASA Perseverance rover to pair them.

After the connection is successful, you can start using the controller tocontrol the NASA Perseverance rover.

FCC Caution：
This device complies with part 15 of the FCC Rules. Operation is subject to the following two conditions:
(1) This device may not cause harmful interference, and
(2) this device must accept any interference received, including interference that may cause undesired operation.

Any Changes or modifications not expressly approved by the party responsible for compliance could void the user's authority to operate the equipment.

Note: This equipment has been tested and found to comply with the limits for a Class B digital device, pursuant to part 15 of the FCC Rules. These limits are designed to provide reasonable protection against harmful interference in a residential installation.
This equipment generates uses and can radiate radio frequency energy and, if not installed and used in accordance with the instructions, may cause harmful interference to radio communications. However, there is no guarantee that interference will not occur in a particular installation. If this equipment does cause harmful interference to radio or television reception, which can be determined by turning the equipment off and on, the user is encouraged to try to correct the interference by one or more of the following measures:
-Reorient or relocate the receiving antenna.
-Increase the separation between the equipment and receiver.
-Connect the equipment into an outlet on a circuit different from that to which the receiver is connected.
-Consult the dealer or an experienced radio/TV technician for help.

NASA Perseverance rover controller：
The device has been evaluated to meet general RF exposure requirement. The device can be used in portable exposure condition without restriction.

NASA Perseverance rover：
To maintain compliance with FCC’s RF Exposure guidelines, This equipment should be installed and operated with minimum distance between 20cm the radiator your body: Use only the supplied antenna.