FST50_04E WiFi DataSheet

V2.0

Product trademark:FST
Product name：WIFI module
Product model：FST50_04E
FCC ID:2AVZ6-FST5004E

SHENZHEN FIRST-TECH CO.,LTD

INTEGRATION INSTRUCTIONS

FCC Rules

The FST50_04E is an Wi-Fi 2.4G Module with digitally modulated systems using an DSSS and OFDM modulation. It operates on the 2412-2462 MHz band and, therefore, is within U.S. FCC part 15.247 standard.

Modular installation instruction

1, FST50_04E Integrates high-speed GPIO and peripheral interface. Please pay attention to the installation direction (pin direction).

2,Antenna could not be in no-load state when module is working. During debugging, it is suggested to add 50 ohms load to the antenna port to avoid damage or performance degradation of the module under long-time no-load condition.

3,When the module needs to output 11.01dBm or more power, it needs a voltage supply of 3.3V or more to achieve the expected output power.

4,When working at full load, it is recommended that the entire bottom surface of the module be attached to the housing or heat dissipation plate, and it is not recommended to conduct heat dissipation through air or screw column heat conduction.

5,UART1 and UART2 are serial ports with the same priority. The port which receives commands returns information.

Trace antenna designs

Not Applicable

RF exposure considerations

To maintain compliance with FCC's RF Exposure guidelines, This equipment should be installed and operated with minimum distance between 20cm the radiator your body: Use only the supplied antenna.

Antennas

The FST50_04E is an Wi-Fi 2.4G Module beams signals and communicates with its antenna, which is PCB Antenna. The PCB Antenna gain is 2dBi

LABEL OF THE END PRODUCT

The final end product must be labeled in a visible area with the following：

Host must Contains FCC ID: 2AVZ6-FST5004E. If the size of the end product is larger than 8x10cm, then the following FCC part 15.19 statement has to also be available on the label: This device complies with Part 15 of FCC rules. Operation is subject to the following two conditions:

(1) this device may not cause harmful interference and

SHENZHEN FIRST TECH CO.,LTD

(2) this device must accept any interference received, including interference that may cause undesired operation.

Information on test modes and additional testing requirements5
Data transfer module demo board can control the EUT work in RF test mode at specified test channel.
Additional testing, Part 15 Subpart B disclaimer
The module without unintentional-radiator digital circuit, so the module does not required an evaluation by FCC Part 15 Subpart B. The host should be evaluated by the FCC Subpart B.
ATTENTION
This device is intended only for OEM integrators under the following conditions: 1) The antenna must be installed such that 20 cm is maintained between the antenna and users, and
2) This device and its antenna(s) must not be co - located with any other transmitters except in accordance with FCC multi - transmitter product procedures. Referring to the multi - transmitter policy, multiple transmitter(s) and module(s) can be operated simultaneously without C2P.
3) For all products market in US, OEM has to limit the Operating Frequency: 2412MHz~2462MHz by supplied firmware programming tool. OEM shall not supply any tool or info to the end - user regarding to Regulatory Domain change.

USERS MANUAL OF THE END PRODUCT:
In the user manual of the end product, the end user has to be informed to keep at least 20cm separation with the antenna while this end product is installed and operated. The end user has to be informed that the FCC radio - frequency exposure guidelines for an uncontrolled environment can be satisfied. The end user has to also be informed that any changes or modifications not expressly approved by the manufacturer could void the user's authority to operate this equipment.
If the size of the end product is smaller than 8x10cm, then additional FCC part 15.19 statement is required to be available in the users manual: This device complies with Part 15 of FCC rules. Operation is subject to the following two conditions:
(1) this device may not cause harmful interference and
(2) this device must accept any interference received, including interference that may cause undesired operation.

FCC WARNING
This device complies with part 15 of the FCC Rules. Operation is subject to the following two conditions:
Any changes or modifications not expressly approved by the party responsible for compliance could void the user's authority to operate the equipment.
NOTE: This equipment has been tested and found to comply with the limits for a Class B digital device, pursuant to Part 15 of the FCC Rules. These limits are designed to provide reasonable protection against harmful interference in a residential installation. This equipment generate, uses and can radiate radio frequency energy and, if not installed and used in accordance with the instructions, may cause harmful interference to radio communications. However, there is no guarantee that interference will not occur in a particular installation.
If this equipment does cause harmful interference to radio or television reception, which can be

SHENZHEN FIRST TECH CO.,LTD

determined by turning the equipment off and on, the user is encouraged to try to correct the interference by one or more of the following measures:
-- Reorient or relocate the receiving antenna.
-- Increase the separation between the equipment and receiver.
-- Connect the equipment into an outlet on a circuit different from that to which the receiver is connected.
-- Consult the dealer or an experienced radio/TV technician for help.

This article introduces the product hardware specifications of FST50_04E

Release Notes

Version	Release Notes	Date
V1.0	Initial Release	2019/4/9
V2.0	Change Pin Pin Definition	2019/10/16

SHENZHEN FIRST-TECH CO.,LTD

Disclaimer and Copyright Notice

The information in this article, including URL addresses for reference, is subject to change without notice.

This document is provided "as is" without warranty of any kind, including any warranty of merchantability, fitness for a particular purpose, or non-infringement, and any warranty of any proposal, specification, or sample mentioned elsewhere. No liability is assumed in this document, including any infringement of any patent rights arising out of the use of the information in this document. No license is granted by estoppel or otherwise in this document, either express or implied.

The contents of this document may change due to product version upgrades or other reasons. Shenzhen Fusite Technology Co., Ltd. reserves the right to modify the contents of this document without any notice or prompt. In addition, this document is only used as a guide. It does not ensure that the content of the document is completely error-free. All statements, information, and suggestions in this document do not constitute any express or implied warranty.

The Wi-Fi Alliance member logo is owned by the Wi-Fi Alliance.

All trademark names, trademarks and registered trademarks mentioned in this article are the property of their respective owners and are hereby declared.

This document is copyrighted by Shenzhen First Technology Co., Ltd. All rights reserved.

SHENZHEN FIRST TECH CO.,LTD

Directory

Directory..... 6
1.product description.....7
1.1 Feature..... 7
1.2 Block Diagram..... 8
2.Module parameters..... 8
2.1 Module detailed parameters..... 8
2.2 RF Parameter range..... 9
3.Module pin description.....10
3.1 Module pin map..... 10
3.2 Module pin description..... 10
4.Shape and size.....11
5.Power consumption..... 12
6.WIFI Module peripheral reference circuit diagram.....12
7.Module production warranty.....12
8. Packaging..... 13

SHENZHEN FIRST-TECH CO.,LTD

1.product description

FST50_04E is a highly integrated, high-performance, low-cost WIFI module developed by the ASR5502A chip. The ASR5502A integrates a radio frequency transceiver, 802.11 PHY + MAC, ARM Cortex-M4F, API interface, real-time counter (RTC) and complete power management circuit. The chip also provides a complete software solution, such as RTOS / TCPIP / SSL / MQTT / WIFI / AT and so on. Customers simply develop applications and bring them to market. Therefore, ASR5502A provides a small form factor solution for IoT applications (such as smart lighting, security, remote control, home appliances, etc.), using the minimum external components to provide unlimited possibilities for WiFi functionality to be embedded in other systems.
The chip itself has a complete WLAN networking function based on the 802.11b / g / n protocol, which can be used as a slave application using the SDIO interface, or as a stand-alone IoT application with Supplicant / HostAP / Sniffer mode.

FST50_04E

1.1 Feature

- Integrated T/R switch and RF balun, no need of off-chip matching network
- Support 802.11 b/g/n compatible WLAN
- Support 802.11e QoS enhancement (WMM)
- Support 802.11i (WPA/WPA2 PSK), Open/WEP/ TKIP/CCMP
- Support power saving mechanism
- Integrated DCDC and LDO, no need of off-chip PMU device
- Support single supply input, range from 3.3V~5V
- UART/ SPI/ I2C/ PWM/ Timer
- Generic AUXADC x8 Channels
- Support Watchdog/RTC/OTA

1.2 Block Diagram

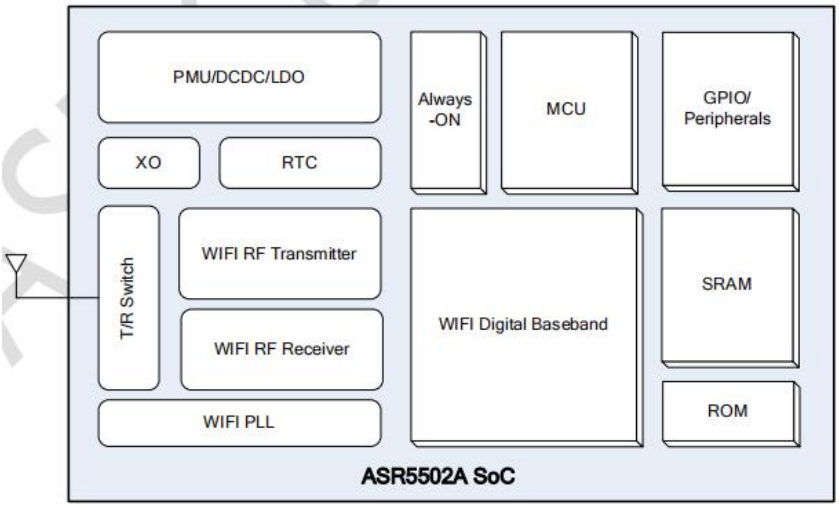

ASR5502A Block Diagram

2.Module parameters

2.1 Module detailed parameters

category	parameter	description
Wireless parameters	Standard certification	FCC/CE/TELEC/SRRC
	Wireless standard	802.11 b/g/n
	Frequency Range	2.4GHz-2.5GHz (2400M-2483.5M)
	Antenna selection	On-board antenna
Hardware parameters	Data interface	UART/SPI/I2C
		GPIO/PWM
	Operating Voltage	3.3（±0.3）V 或 5（±0.2）V
	Working current	average： 45mA
	Supply current	Peak current：500mA

	Operating temperature	-40° ~85°
	storage temperature	-40° ~85°
	Package size	16mm*24mm*2.5mm
	Plate thickness	1mm
	Encapsulation	Standard 2mm half hole stamp pin, can be directly attached to the circuit board

Module detailed parameter table

2.2 RF Parameter range

parameter	Typical value		unit
Input frequency	2412-2483.5		MHz
Input resistance	50		Ω
Output Power	802.11b	>17	dBm
	802.11g	>14	dBm
	802.11n(HT20)	>13	dBm
EVM	802.11b	<15	%
	802.11g	<-28	dB
	802.11n(HT20)	<-30	dB
Receiving sensitivity	11M	<-90	dBm
	54M	<-72	dBm
	65M(HT20)	<-69	dBm

RF Parameter range table

SHENZHEN FIRST TECH CO.,LTD

3.Module pin description

3.1 Module pin map

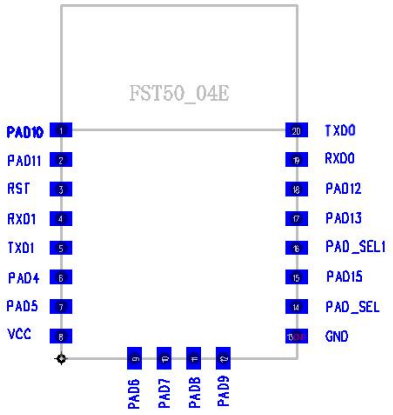

Pin distribution front view

3.2 Module pin description

Number	PIN	Function Description
1	PAD10	GPIO, High level is 3.3V
2	PAD11	GPIO, High level is 3.3V
3	RST	Reset pin; chip enable pin, low level chip is off, high level works normally. Note: The module is pulled up by default
4	RXD1	Burn serial port, High level is equal to VCC
5	TXD1	Burn serial port, High level is equal to VCC
6	PAD4	GPIO, High level is 3.3V
7	PAD5	GPIO, High level is 3.3V
8	VCC	powered by, 3.3V
9	PAD6	GPIO, High level is 3.3V
10	PAD7	GPIO, High level is 3.3V
11	PAD8	GPIO, High level is 3.3V
12	PAD9	GPIO, High level is 3.3V
13	GND	Ground
14	PAD_SEL	Mode selection, normally float or pull low. Note, do not pull high.
15	PAD15	GPIO, High level is 3.3V
16	PAD_SEL1	Flashing Access 3.3V
17	PAD13	GPIO, High level is 3.3V
18	PAD12	GPIO, High level is 3.3V
19	RXD0	UART（RX）, High level is equal to VCC, 10K pull-up resistor must be connected externally

SHENZHEN FIRST TECH CO.,LTD

20	TXD0	UART（TX），High level is equal to VCC, 10K pull-up resistor must be connected externally

Note: PAD_SEL1 is pulled up 3.3V during program compilation and programming.

4.Shape and size

The external dimensions of the FST50_04E SMD module are 16mm * 24mm * 2.5mm. This module uses SPI Flash with a capacity of 16M bits. The module uses a 2 DBi PCB on-board antenna.

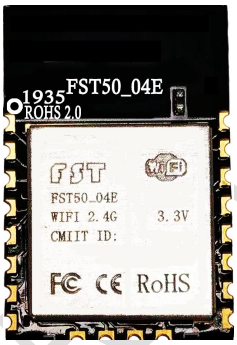

Front view

Back view

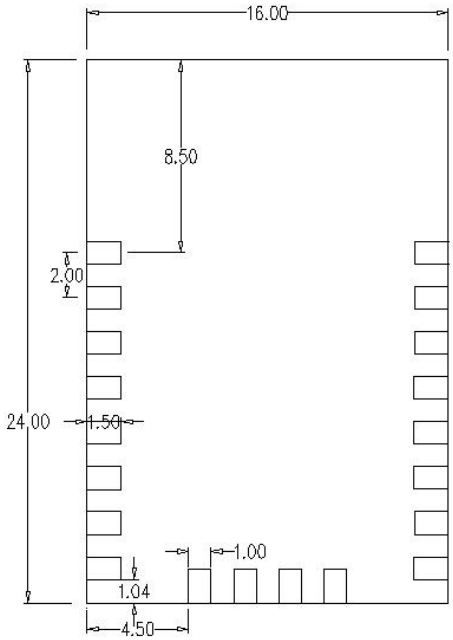

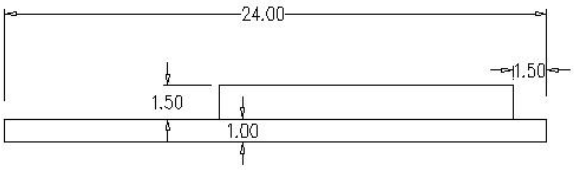

FST50_04E module size plan (unit: mm)

Length	width	height	Plate thickness	PAD	Pin distance
24mm	16 mm	2.5 mm	1mm	1 mm x 1.5 mm	2mm

FST50_04EModule size comparison table

5.Power consumption

state	average(mA)	max(mA)	min(mA)
idle	25	203.9	7.4
ap	44.2	272.1	18.5
sta	46.4	272.4	22.9
sta_disconnect	40.3	277.6	18.7

Note: Unless otherwise specified, the test conditions are: VCC = 5 V, and the temperature is 25 ℃.

6.WIFI Module peripheral reference circuit diagram

Module peripheral circuit can refer to the figure:

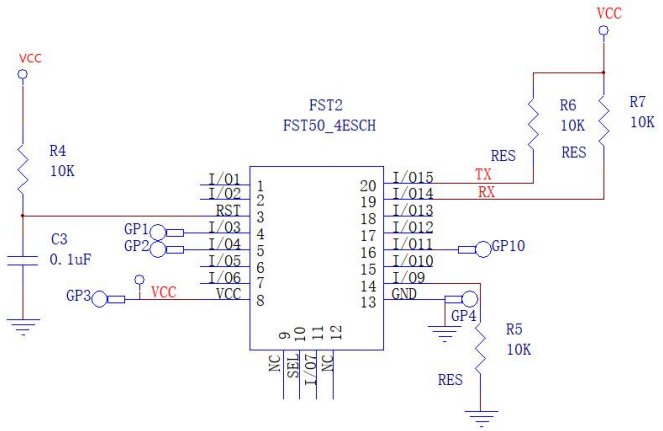

GP1,GP2,GP3,GP4,GP10为测试点

7.Module production warranty

- Production shelf life is 6 months.
- The module should be stored in vacuum packaging and sealed to prevent moisture and oxidation.
- For packages with a date of more than one month, the modules need to be baked before production on-line.

8. Packaging

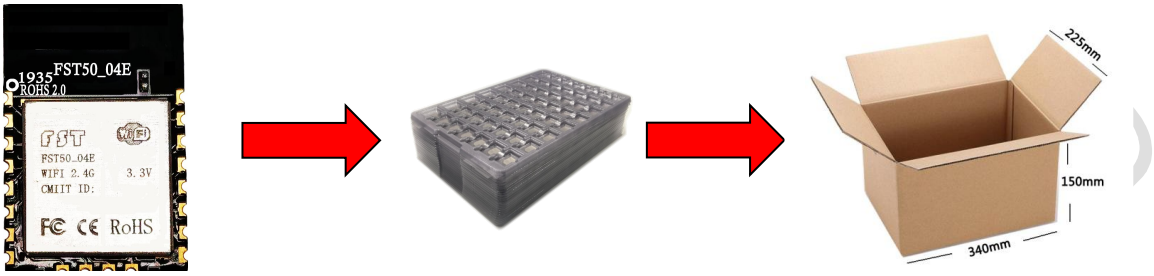

Note: The packaging method may be fine-tuned later

SHENZHEN FIRST-TECH CO.

Integration instructions for host product manufacturers according to KDB 996369 D03 OEM Manual v01

2.2 List of applicable FCC rules
The FST50_04E is an Wi-Fi 2.4G Module with digitally modulated systems using an DSSS and OFDM modulation. It operates on the 2412-2462 MHz band and, therefore, is within U.S. FCC part 15.247 standard.

2.3 Specific operational use conditions
FST50_04E Integrates high-speed GPIO and peripheral interface. Please pay attention to the installation direction (pin direction). UART1 and UART2 are serial ports with the same priority. The port which receives commands returns information. When the module needs to output 11.01dBm or more power, it needs a voltage supply of 3.3V or more to achieve the expected output power. When working at full load, it is recommended that the entire bottom surface of the module be attached to the housing or heat dissipation plate, and it is not recommended to conduct heat dissipation through air or screw column heat conduction. Antenna could not be in no-load state when module is working. During debugging, it is suggested to add 50 ohms load to the antenna port to avoid damage or performance degradation of the module under long-time no-load condition.

2.4 Limited module procedures
not applicable; Single Modular Approval Request

2.5 Trace antenna designs
Not applicable;

2.6 RF exposure considerations
To maintain compliance with FCC's RF Exposure guidelines, This equipment should be installed and operated with minimum distance between 20cm the radiator your body: Use only the supplied antenna.

2.7 Antennas
The FST50_04E is an Wi-Fi 2.4G Module beams signals and communicates with its antenna, which is PCB Antenna. The PCB Antenna gain is 2dBi. Antenna could not be in no-load state when module is working. During debugging, it is suggested to add 50 ohms load to the antenna port to avoid damage or performance degradation of the module under long-time no-load condition.

2.8 Label and compliance information
The final end product must be label in a visible area with the following
Host must Contains FCC ID: 2AVZ6-FST5004E. If the size of the end product is larger than 8x10cm, then the following FCC part 15.19 statement has to also be available on the label: This device complies with Part 15 of FCC rules. Operation is subject to the following two conditions:
(1) this device may not cause harmful interference and
(2) this device must accept any interference received, including interference that may cause undesired operation.

2.9 Information on test modes and additional testing requirements
Data transfer module demo board can control the EUT work in RF test mode at specified test channel.

2.10 Additional testing, Part 15 Subpart B disclaimer
The module without unintentional-radiator digital circuit, so the module does not required an evaluation by FCC Part 15 Subpart B. The host should be evaluated by the FCC Subpart B.

ATTENTION
This device is intended only for OEM integrators under the following conditions:
1) The antenna must be installed such that 20 cm is maintained between the antenna and users, and
2) This device and its antenna(s) must not be co‑located with any other transmitters except in accordance with FCC multi‑transmitter product procedures. Referring to the multi‑transmitter policy, multiple transmitter(s) and module(s) can be operated simultaneously without C2P.

3) For all products market in US, OEM has to limit the Operating Frequency: 2412MHz~2462MHz by supplied firmware programming tool. OEM shall not supply any tool or info to the end - user regarding to Regulatory Domain change.

USERS MANUAL OF THE END PRODUCT:
In the user manual of the end product, the end user has to be informed to keep at least 20cm separation with the antenna while this end product is installed and operated. The end user has to be informed that the FCC radio - frequency exposure guidelines for an uncontrolled environment can be satisfied. The end user has to also be informed that any changes or modifications not expressly approved by the manufacturer could void the user's authority to operate this equipment.
If the size of the end product is smaller than 8x10cm, then additional FCC part 15.19 statement is required to be available in the users manual: This device complies with Part 15 of FCC rules. Operation is subject to the following two conditions:
(1) this device may not cause harmful interference and
(2) this device must accept any interference received, including interference that may cause undesired operation.

FCC WARNING
This device complies with part 15 of the FCC Rules. Operation is subject to the following two conditions:
Any changes or modifications not expressly approved by the party responsible for compliance could void the user's authority to operate the equipment.
NOTE: This equipment has been tested and found to comply with the limits for a Class B digital device, pursuant to Part 15 of the FCC Rules. These limits are designed to provide reasonable protection against harmful interference in a residential installation. This equipment generate, uses and can radiate radio frequency energy and, if not installed and used in accordance with the instructions, may cause harmful interference to radio communications. However, there is no guarantee that interference will not occur in a particular installation.
If this equipment does cause harmful interference to radio or television reception, which can be determined by turning the equipment off and on, the user is encouraged to try to correct the interference by one or more of the following measures:
-- Reorient or relocate the receiving antenna.
-- Increase the separation between the equipment and receiver.
-- Connect the equipment into an outlet on a circuit different from that to which the receiver is connected.
-- Consult the dealer or an experienced radio/TV technician for help.