FCC REPORT
(UNII)

Applicant:	Move Robotics Technology Co., Ltd.
Address of Applicant:	Floor 4, No.1150, Feidu Road, Xin Cheng town, Nanhui, Pudong, Shanghai, China
Equipment Under Test (EUT)	
Product Name:	Health Management Exoskeleton
Model No.:	Mercury-Sports-1901
Trade mark:	Move Robotics
FCC ID:	2AVZEMRMCRUS20PT200
Applicable standards:	FCC CFR Title 47 Part 15 Subpart E Section 15.407
Date of sample receipt:	24 Mar., 2020
Date of Test:	25 Mar., to 15 Jul., 2020
Date of report issued:	17 Aug., 2020
Test Result:	PASS*

* In the configuration tested, the EUT complied with the standards specified above.

Authorized Signature:

Bruce Zhang
Laboratory Manager

This report details the results of the testing carried out on one sample. The results contained in this test report do not relate to other samples of the same product and does not permit the use of the CCIS product certification mark. The manufacturer should ensure that all products in series production are in conformity with the product sample detailed in this report.

This report may only be reproduced and distributed in full. If the product in this report is used in any configuration other than that detailed in the report, the manufacturer must ensure the new system complies with all relevant standards.

This document cannot be reproduced except in full, without prior written approval of the Company. Any unauthorized alteration, forgery or falsification of the content or appearance of this document is unlawful and offenders may be prosecuted to the fullest extent of the law. Unless otherwise stated the results shown in this test report refer only to the sample(s) tested and such sample(s) are retained for 90 days only.

2 Version

Version No.	Date	Description
00	*30 Jul., 2020*	*Original*
01	*17 Aug., 2020*	*1. Updated conducted emission data on page 12/13.*

Tested by: Janet Wei ***Date:*** *17 Aug., 2020*

Test Engineer

Reviewed by: Winner zhang ***Date:*** *17 Aug., 2020*

Project Engineer

3 Contents

Page

1 COVER PAGE 1

2 VERSION 2

3 CONTENTS 3

4 TEST SUMMARY 4

5 GENERAL INFORMATION 5

5.1 CLIENT INFORMATION 5
5.2 GENERAL DESCRIPTION OF E.U.T 5
5.3 TEST ENVIRONMENT AND MODE, AND TEST SAMPLES PLANS 7
5.4 DESCRIPTION OF SUPPORT UNITS 7
5.5 MEASUREMENT UNCERTAINTY 7
5.6 ADDITIONS TO, DEVIATIONS, OR EXCLUSIONS FROM THE METHOD 7
5.7 RELATED SUBMITTAL(S) / GRANT (S) 7
5.8 LABORATORY FACILITY 8
5.9 LABORATORY LOCATION 8
5.10 TEST INSTRUMENTS LIST 9

6 TEST RESULTS AND MEASUREMENT DATA 10

6.1 ANTENNA REQUIREMENT 10
6.2 CONDUCTED EMISSION 11
6.3 CONDUCTED OUTPUT POWER 14
6.4 OCCUPY BANDWIDTH 15
6.5 POWER SPECTRAL DENSITY 16
6.6 BAND EDGE 17
6.7 SPURIOUS EMISSION 22
6.7.1 Restricted Band 22
6.7.2 Unwanted Emissions out of the Restricted Bands 23
6.8 FREQUENCY STABILITY 31

7 TEST SETUP PHOTO 33

8 EUT CONSTRUCTIONAL DETAILS 35

4 Test Summary

Test Item	Section in CFR 47	Test Result
Antenna requirement	15.203 & 15.407 (a)	Pass
AC Power Line Conducted Emission	15.207	Pass
Conducted Peak Output Power	15.407 (a) (1) (iv) & (a) (2) & (a) (3)	Pass
26dB Occupied Bandwidth	15.407 (a) (5)	Pass
6dB Emission Bandwidth	15.407(e)	Pass
Power Spectral Density	15.407 (a) (1) (iv) & (a) (2) & (a) (3)	Pass
Band Edge	15.407(b)	Pass
Spurious Emission	15.407 (b) & 15.205 & 15.209	Pass
Frequency Stability	15.407(g)	Pass

Remark:

1. *Pass: The EUT complies with the essential requirements in the standard.*
2. *N/A: Not Applicable.*
3. *The cable insertion loss used by "RF Output Power" and other conduction measurement items is 0.5dB (provided by the customer).*

Test Method:	*ANSI C63.4-2014* *ANSI C63.10-2013* *KDB 789033 D02 General UNII Test Procedures New Rules v02r01*

5 General Information

5.1 Client Information

Applicant:	Move Robotics Technology Co., Ltd.
Address:	Floor 4, No.1150, Feidu Road, Xin Cheng town, Nanhui, Pudong, Shanghai, China
Manufacturer/ Factory:	Move Robotics Technology Co., Ltd.
Address:	Floor 4, No.1150, Feidu Road, Xin Cheng town, Nanhui, Pudong, Shanghai, China

5.2 General Description of E.U.T.

Product Name:	Health Management Exoskeleton
Model No.:	Mercury-Sports-1901
Operation Frequency:	Band 1: 5150MHz-5250MHz, Band 4: 5725MHz-5825MHz
Channel numbers:	Band 1: 802.11a/802.11n20: 4 Band 4: 802.11a/802.11n20: 5
Channel separation:	802.11a/802.11n20: 20MHz
Modulation technology (IEEE 802.11a):	BPSK, QPSK, 16-QAM, 64-QAM
Modulation technology (IEEE 802.11n):	BPSK, QPSK, 16-QAM, 64-QAM
Data speed (IEEE 802.11a):	6Mbps, 9Mbps,12Mbps,18Mbps, 24Mbps, 36Mbps, 48Mbps, 54Mbps
Data speed (IEEE 802.11n20):	MCS0: 6.5Mbps, MCS1:13Mbps,MCS2:19.5Mbps, MCS3:26Mbps, MCS4:39Mbps, MCS5:52Mbps, MCS6:58.5Mbps, MCS7:65Mbps
Antenna Type:	Internal Antenna
Antenna gain:	Waist: 5.2G WiFi: 3.0dBi; 5.8G WiFi: 2.0dBi
Power supply:	(Rechargeable Li-ion Battery DC7.4V-3500mAh) x 2
AC adapter:	Model: GEO361DA-168200 Input: 100-240V ~ 50/60Hz 1.2A Output: 16.8V 2A
Test Sample Condition:	The test samples were provided in good working order with no visible defects.

Operation Frequency each of channel	
Band 1	
802.11a/802.11n-HT20	
Channel	Frequency
36	5180MHz
40	5200MHz
44	5220MHz
48	5240MHz
Band 4	
802.11a/802.11n -HT20	
Channel	Frequency
149	5745MHz
153	5765MHz
157	5785MHz
161	5805MHz
165	5825MHz

Note:
In section 15.31(m), regards to the operating frequency range over 10 MHz, the Lowest frequency, the middle frequency, and the highest frequency of channel were selected to perform the test, and the selected channel see below:

Band 1	
802.11a/802.11n -HT20	
Channel	Frequency
Lowest	5180MHz
Middle	5200MHz
Highest	5240MHz
Band 4	
802.11a/802.11n -HT20	
Channel	Frequency
Lowest	5745MHz
Middle	5785MHz
Highest	5825MHz

5.3 Test environment and mode, and test samples plans

Operating Environment:	
Temperature:	24.0 °C
Humidity:	54 % RH
Atmospheric Pressure:	1010 mbar
Test mode:	
Continuously transmitting mode	Keep the EUT in 100% duty cycle transmitting with modulation.
We have verified the construction and function in typical operation. All the test modes were carried out with the EUT in transmitting operation, which was shown in this test report and defined as follows:	
Per-scan all kind of data rate, and found the follow list were the worst case.	
Mode	Data rate
802.11a	6 Mbps
802.11n20	6.5 Mbps

5.4 Description of Support Units

Manufacturer	Description	Model	Serial Number	FCC ID/DoC
LENOVO	Laptop	SL510	2847A65	DoC

5.5 Measurement Uncertainty

Parameters	Expanded Uncertainty
Conducted Emission (9kHz ~ 30MHz)	±1.60 dB (k=2)
Radiated Emission (9kHz ~ 30MHz)	±3.12 dB (k=2)
Radiated Emission (30MHz ~ 1000MHz)	±4.32 dB (k=2)
Radiated Emission (1GHz ~ 18GHz)	±5.16 dB (k=2)
Radiated Emission (18GHz ~ 40GHz)	±3.20 dB (k=2)

5.6 Additions to, deviations, or exclusions from the method

No

5.7 Related Submittal(s) / Grant (s)

This is an original grant, no related submittals and grants.

5.8 Laboratory Facility

The test facility is recognized, certified, or accredited by the following organizations:

- **FCC - Designation No.: CN1211**

Shenzhen Zhongjian Nanfang Testing Co., Ltd. has been accredited as a testing laboratory by FCC(Federal Communications Commission). The test firm Registration No. is 727551.

- **ISED – CAB identifier.: CN0021**

The 3m Semi-anechoic chamber of Shenzhen Zhongjian Nanfang Testing Co., Ltd. has been Registered by Certification and Engineering Bureau of Industry Canada for radio equipment testing with Registration No.: 10106A-1.

- **A2LA - Registration No.: 4346.01**

This laboratory is accredited in accordance with the recognized International Standard ISO/IEC 17025:2005 General requirements for the competence of testing and calibration laboratories. The test scope can be found as below link: https://portal.a2la.org/scopepdf/4346-01.pdf

5.9 Laboratory Location

Shenzhen Zhongjian Nanfang Testing Co., Ltd.
Address: No.110~116, Building B, Jinyuan Business Building, Xixiang Road,
Bao'an District, Shenzhen, Guangdong, China
Tel: +86-755-23118282, Fax: +86-755-23116366
Email: info@ccis-cb.com, Website: http://www.ccis-cb.com

5.10 Test Instruments list

Test Equipment	Manufacturer	Model No.	Serial No.	Cal. Date (mm-dd-yy)	Cal. Due date (mm-dd-yy)
3m SAC	SAEMC	9m*6m*6m	966	07-22-2017	07-21-2020
BiConiLog Antenna	SCHWARZBECK	VULB9163	497	03-07-2020	03-06-2021
Biconical Antenna	SCHWARZBECK	VUBA9117	359	06-22-2017	06-21-2020
				06-22-2020	06-21-2021
Horn Antenna	SCHWARZBECK	BBHA9120D	916	03-07-2020	03-06-2021
Horn Antenna	SCHWARZBECK	BBHA9120D	1805	06-22-2017	06-21-2020
				06-22-2020	06-21-2021
Horn Antenna	SCHWARZBECK	BBHA 9170	BBHA9170582	11-18-2019	11-17-2020
EMI Test Software	AUDIX	E3	Version: 6.110919b		
Pre-amplifier	HP	8447D	2944A09358	03-07-2020	03-06-2021
Pre-amplifier	CD	PAP-1G18	11804	03-07-2020	03-06-2021
Spectrum analyzer	Rohde & Schwarz	FSP30	101454	03-05-2020	03-04-2021
Spectrum analyzer	Rohde & Schwarz	FSP40	100363	11-18-2019	11-17-2020
EMI Test Receiver	Rohde & Schwarz	ESRP7	101070	03-05-2020	03-04-2021
Spectrum Analyzer	Agilent	N9020A	MY50510123	11-18-2019	11-17-2020
Signal Generator	Rohde & Schwarz	SMX	835454/016	03-05-2020	03-04-2021
Signal Generator	R&S	SMR20	1008100050	03-05-2020	03-04-2021
RF Switch Unit	MWRFTEST	MW200	N/A	N/A	N/A
Test Software	MWRFTEST	MTS8200	Version: 2.0.0.0		
Cable	ZDECL	Z108-NJ-NJ-81	1608458	03-07-2020	03-06-2021
Cable	MICRO-COAX	MFR64639	K10742-5	03-07-2020	03-06-2021
Cable	SUHNER	SUCOFLEX100	58193/4PE	03-07-2020	03-06-2021
DC Power Supply	XinNuoEr	WYK-10020K	1409050110020	09-25-2019	09-24-2020
Temperature Humidity Chamber	HengPu	HPGDS-500	20140828008	11-01-2019	10-31-2020
Simulated Station	Rohde & Schwarz	CMW500	140493	07-22-2019	07-21-2020

Conducted Emission:					
Test Equipment	**Manufacturer**	**Model No.**	**Serial No.**	**Cal. Date (mm-dd-yy)**	**Cal. Due date (mm-dd-yy)**
EMI Test Receiver	Rohde & Schwarz	ESCI	101189	03-05-2020	03-04-2021
Pulse Limiter	SCHWARZBECK	OSRAM 2306	9731	03-05-2020	03-04-2021
LISN	CHASE	MN2050D	1447	03-05-2020	03-04-2021
LISN	Rohde & Schwarz	ESH3-Z5	8438621/010	07-21-2017	07-20-2020
Cable	HP	10503A	N/A	03-05-2020	03-04-2021
EMI Test Software	AUDIX	E3	Version: 6.110919b		

6 Test results and Measurement Data

6.1 Antenna requirement

Standard requirement:	FCC Part15 E Section 15.203 /407(a)
15.203 requirement: An intentional radiator shall be designed to ensure that no antenna other than that furnished by the responsible party shall be used with the device. The use of a permanently attached antenna or of an antenna that uses a unique coupling to the intentional radiator, the manufacturer may design the unit so that a broken antenna can be replaced by the user, but the use of a standard antenna jack or electrical connector is prohibited. This requirement does not apply to carrier current devices or to devices operated under the provisions of §15.211, § 15.213, § 15.217, § 15.219, or § 15.221. Further, this requirement does not apply to intentional radiators that must be professionally installed, such as perimeter protection systems and some field disturbance sensors, or to other intentional radiators which, in accordance with § 15.31(d), must be measured at the installation site. However, the installer shall be responsible for ensuring that the proper antenna is employed so that the limits in this part are not exceeded.	
E.U.T Antenna:	
The Wi-Fi antenna is an Internal antenna which cannot replace by end-user, the best case gain of the antenna is 3 dBi. The ANT please refers to internal photos.	

6.2 Conducted Emission

Test Requirement:	FCC Part15 C Section 15.207		
Test Frequency Range:	150kHz to 30MHz		
Class / Severity:	Class B		
Receiver setup:	RBW=9kHz, VBW=30kHz		
Limit:	Frequency range (MHz)	Limit (dBuV)	
		Quasi-peak	
	0.15-0.5	66 to 56*	0.15-0.5
	0.5-5	56	0.5-5
	5-30	60	5-30
	* Decreases with the logarithm of the frequency.		
Test procedure	1. The E.U.T and simulators are connected to the main power through a line impedance stabilization network (L.I.S.N.). It provides a 50ohm/50uH coupling impedance for the measuring equipment. 2. The peripheral devices are also connected to the main power through a LISN that provides a 50ohm/50uH coupling impedance with 50ohm termination. (Please refer to the block diagram of the test setup and photographs). 3. Both sides of A.C. line are checked for maximum conducted interference. In order to find the maximum emission, the relative positions of equipment and all of the interface cables must be changed according to ANSI C63.10(latest version) on conducted measurement.		
Test setup:	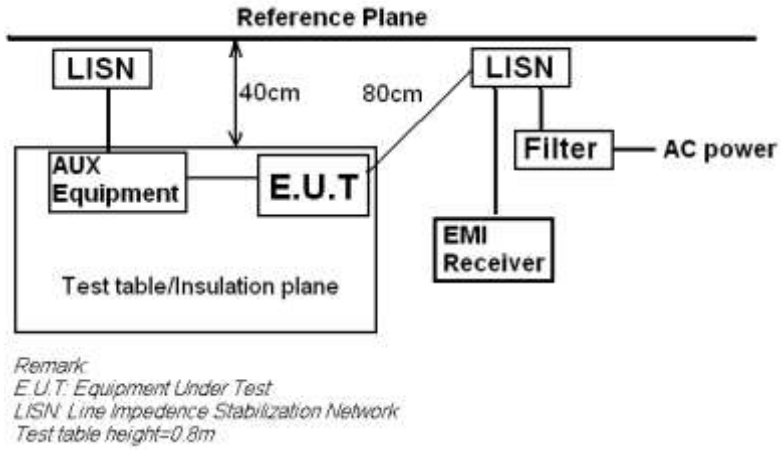		
Test Instruments:	Refer to section 5.10 for details		
Test mode:	Refer to section 5.3 for details.		
Test results:	Passed		

Measurement Data:

Waist:

Product name:	Health Management Exoskeleton	**Product model:**	Mercury-Sports-1901
Test by:	Janet	**Test mode:**	5G Wi-Fi Tx mode
Test frequency:	150 kHz ~ 30 MHz	**Phase:**	Line
Test voltage:	AC 120 V/60 Hz	**Environment:**	Temp: 22.5℃ Huni: 55%

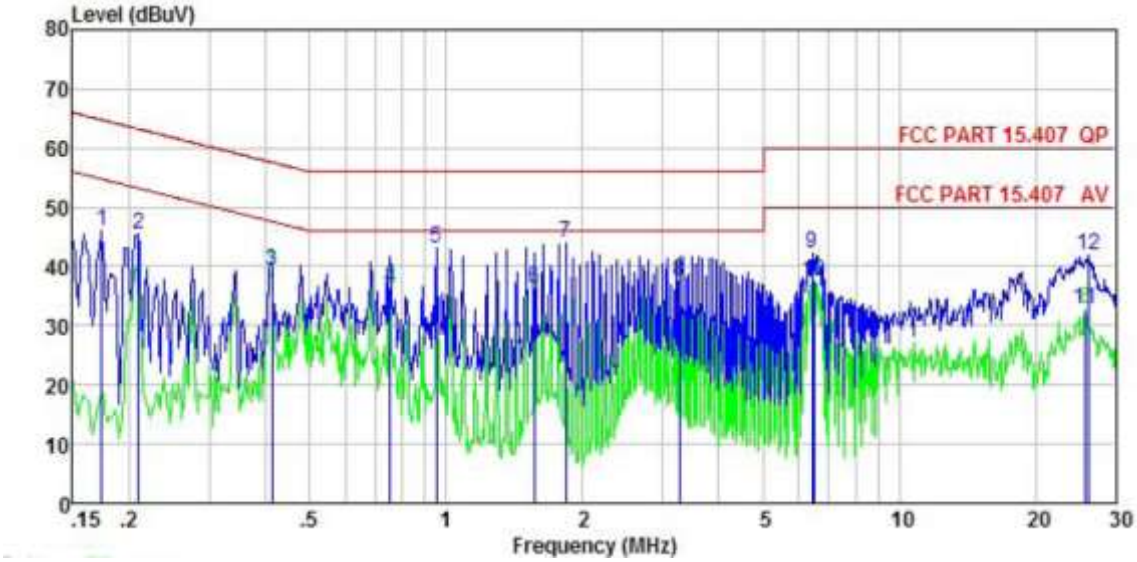

	Freq	Read Level	LISN Factor	Cable Loss	Aux Factor	Level	Limit Line	Over Limit	Remark
	MHz	dBuV	dB	dB	dB	dBuV	dBuV	dB	
1	0.174	35.86	-0.58	10.77	-0.11	45.94	64.77	-18.83	QP
2	0.209	35.38	-0.59	10.76	-0.17	45.38	63.23	-17.85	QP
3	0.413	28.71	-0.47	10.73	0.31	39.28	47.59	-8.31	Average
4	0.751	26.39	-0.55	10.79	-0.24	36.39	46.00	-9.61	Average
5	0.953	32.47	-0.61	10.86	0.34	43.06	56.00	-12.94	QP
6	1.568	26.02	-0.55	10.93	-0.04	36.36	46.00	-9.64	Average
7	1.839	33.88	-0.52	10.95	-0.23	44.08	56.00	-11.92	QP
8	3.276	27.14	-0.42	10.91	-0.16	37.47	46.00	-8.53	Average
9	6.420	30.79	-0.52	10.81	1.00	42.08	60.00	-17.92	QP
10	6.488	26.07	-0.52	10.81	1.03	37.39	50.00	-12.61	Average
11	25.727	22.00	-1.09	10.87	0.99	32.77	50.00	-17.23	Average
12	26.278	31.10	-1.11	10.87	1.00	41.86	60.00	-18.14	QP

Notes:

1. *An initial pre-scan was performed on the line and neutral lines with peak detector.*
2. *Quasi-Peak and Average measurement were performed at the frequencies with maximized peak emission.*
3. *Final Level =Receiver Read level + LISN Factor + Aux Factor + Cable Loss.*

Product name:	Health Management Exoskeleton	**Product model:**	Mercury-Sports-1901
Test by:	Janet	**Test mode:**	5G Wi-Fi Tx mode
Test frequency:	150 kHz ~ 30 MHz	**Phase:**	Neutral
Test voltage:	AC 120 V/60 Hz	**Environment:**	Temp: 22.5℃ Huni: 55%

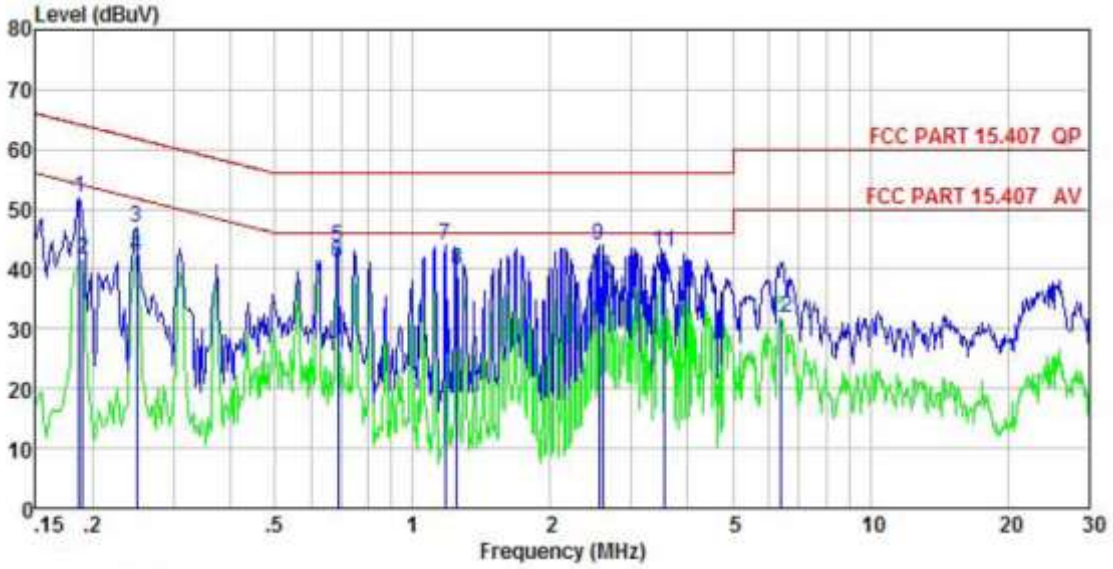

	Freq	Read Level	LISN Factor	Cable Loss	Aux Factor	Level	Limit Line	Over Limit	Remark
	MHz	dBuV	dB	dB	dB	dBuV	dBuV	dB	
1	0.186	41.92	-0.67	10.76	0.00	52.01	64.20	-12.19	QP
2	0.190	31.53	-0.67	10.76	0.00	41.62	54.02	-12.40	Average
3	0.249	36.86	-0.67	10.75	0.01	46.95	61.78	-14.83	QP
4	0.249	32.26	-0.67	10.75	0.01	42.35	51.78	-9.43	Average
5	0.686	33.44	-0.64	10.77	0.04	43.61	56.00	-12.39	QP
6	0.686	30.81	-0.64	10.77	0.04	40.98	46.00	-5.02	Average
7	1.178	33.75	-0.69	10.89	0.10	44.05	56.00	-11.95	QP
8	1.249	29.43	-0.69	10.90	0.11	39.75	46.00	-6.25	Average
9	2.554	33.46	-0.67	10.94	0.25	43.98	56.00	-12.02	QP
10	2.608	27.01	-0.67	10.93	0.26	37.53	46.00	-8.47	Average
11	3.547	32.23	-0.65	10.90	0.43	42.91	56.00	-13.09	QP
12	6.352	21.09	-0.72	10.81	0.79	31.97	50.00	-18.03	Average

Notes:

1. *An initial pre-scan was performed on the line and neutral lines with peak detector.*
2. *Quasi-Peak and Average measurement were performed at the frequencies with maximized peak emission.*
3. *Final Level =Receiver Read level + LISN Factor + Aux Factor + Cable Loss.*

6.3 Conducted Output Power

Test Requirement:	FCC Part15 E Section 15.407 (a) (1) (iv) & (a)(2) & (a) (3)
Limit:	Band 1: 24dBm Band 4: 30dBm
Test setup:	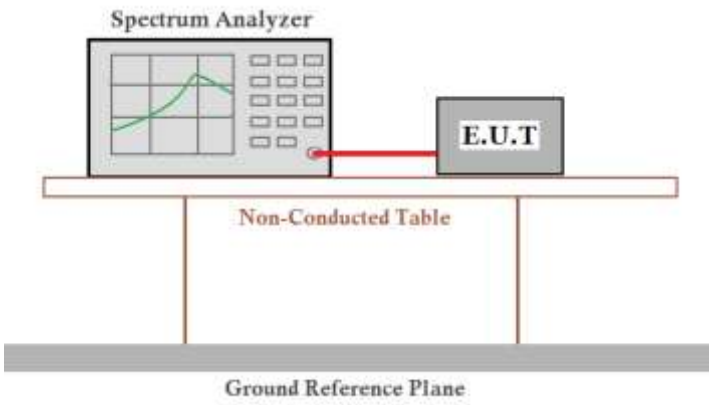
Test Instruments:	Refer to section 5.10 for details
Test mode:	Refer to section 5.3 for details
Test results:	Please refer to report CCISE200308602

6.4 Occupy Bandwidth

Test Requirement:	FCC Part15 E Section 15.407 (a) (5) and Section 15.407 (e)
Limit:	Band 1/2/3/4: N/A (26dB Emission Bandwidth and 99% Occupy Bandwidth) Band 4: >500kHz (6dB Bandwidth)
Test setup:	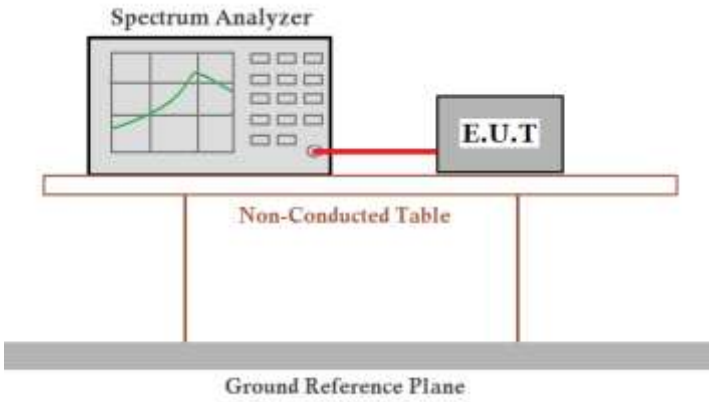
Test Instruments:	Refer to section 5.10 for details
Test mode:	Refer to section 5.3 for details
Test results:	Please refer to report CCISE200308602

6.5 Power Spectral Density

Test Requirement:	FCC Part15 E Section 15.407 (a) (1) (iv) & (a) (2) & (a)(3)
Limit:	Band 1: 11 dBm/MHz Band 4: 30 dBm/500kHz
Test setup:	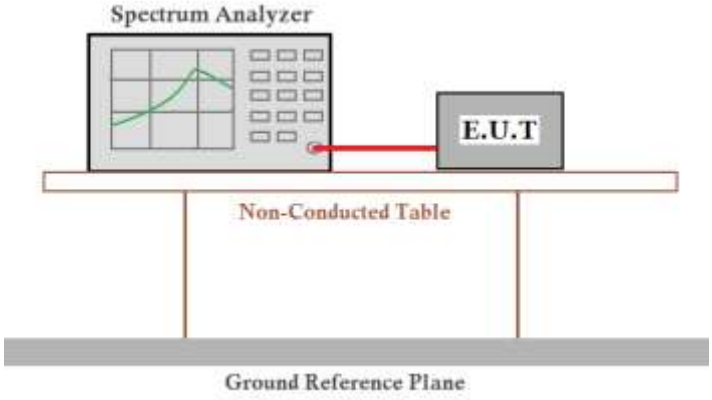
Test Instruments:	Refer to section 5.10 for details
Test mode:	Refer to section 5.3 for details
Test results:	Please refer to report CCISE200308602

6.6 Band Edge

Test Requirement:	FCC Part 15 E Section 15.407 (b)			
Receiver setup:	Detector	RBW	VBW	Remark
	Quasi-peak	120kHz	300kHz	Quasi-peak Value
	RMS	1MHz	3MHz	Average Value
Limit:	Band	Limit (dBuV/m @3m)		Remark
	Band 1/2/3	68.20		Peak Value
		54.00		Average Value
	Band 4 limit: For transmitters operating in the 5.725-5.85 GHz band: All emissions shall be limited to a level of −27 dBm/MHz at 75 MHz or more above or below the band edge increasinglinearly to 10 dBm/MHz at 25 MHz above or below the band edge, and from 25 MHz above or below the band edge increasing linearly to a level of 15.6 dBm/MHz at 5 MHz above or below the band edge, and from 5 MHz above or below the band edge increasing linearly to a level of 27 dBm/MHz at the band edge. Remark: 1. Band 1/2/3 limit: E[dBμV/m] = EIRP[dBm] + 95.2=68.2 dBuV/m, for EIPR[dBm]=-27dBm. 2. Band 4 limit: E[dBμV/m] = EIRP[dBm] + 95.2=68.2 dBuV/m, for EIPR[dBm]=-27dBm. E[dBμV/m] = EIRP[dBm] + 95.2=105.2 dBuV/m, for EIPR[dBm]=10dBm. E[dBμV/m] = EIRP[dBm] + 95.2=110.8 dBuV/m, for EIPR[dBm]=15.6dBm. E[dBμV/m] = EIRP[dBm] + 95.2=122.2 dBuV/m, for EIPR[dBm]=27dBm.			
Test Procedure:	1. The EUT was placed on the top of a rotating table 0.8 meters above the ground at a 3 meter camber. The table was rotated 360 degrees to determine the position of the highest radiation. 2. The EUT was set 3 meters away from the interference-receiving antenna, which was mounted on the top of a variable-height antenna tower. 3. The antenna height is varied from one meter to four meters above the ground to determine the maximum value of the field strength. Both horizontal and vertical polarizations of the antenna are set to make the measurement. 4. For each suspected emission, the EUT was arranged to its worst case and then the antenna was tuned to heights from 1 meter to 4 meters and the rotatable was turned from 0 degrees to 360 degrees to find the maximum reading. 5. The test-receiver system was set to Peak Detect Function and Specified Bandwidth with Maximum Hold Mode. 6. If the emission level of the EUT in peak mode was 10dB lower than the limit specified, then testing could be stopped and the peak values of the EUT would be reported. Otherwise the emissions that did not have 10dB margin would be re-tested one by one using peak, quasi-peak or average method as specified and then reported in a data sheet.			
Test setup:	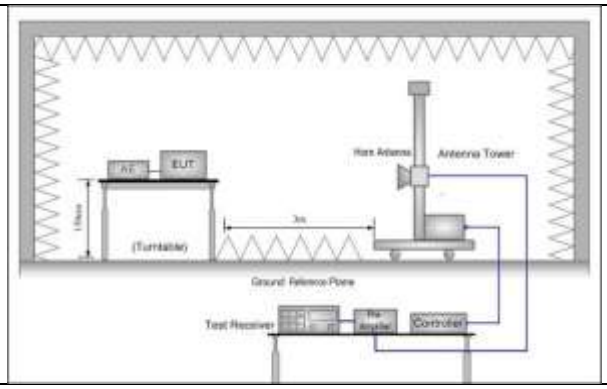			
Test Instruments:	Refer to section 5.10 for details			
Test mode:	Refer to section 5.3 for details			
Test results:	Passed			

Measurement Data (worst case):

Waist:

Band 1:

Band 1 – 802.11a									
Test channel: Lowest channel									
Detector: Peak Value									
Frequency (MHz)	Read Level (dBuV/m)	Antenna Factor (dB)	Cable Loss (dB)	Aux Factor (dB)	Preamp Factor (dB)	Level (dBuV/m)	Limit Line (dBuV/m)	Over Limit (dB)	Polarization
5150.00	44.03	31.53	7.05	2.54	41.93	43.22	68.20	-24.98	Horizontal
5150.00	44.12	31.53	7.05	2.54	41.93	43.31	68.20	-24.89	Vertical
Detector: Average Value									
Frequency (MHz)	Read Level (dBuV/m)	Antenna Factor (dB)	Cable Loss (dB)	Aux Factor (dB)	Preamp Factor (dB)	Level (dBuV/m)	Limit Line (dBuV/m)	Over Limit (dB)	Polarization
5150.00	38.45	31.53	7.05	2.54	41.93	37.64	54.00	-16.36	Horizontal
5150.00	39.03	31.53	7.05	2.54	41.93	38.22	54.00	-15.78	Vertical
Test channel: Highest channel									
Detector: Peak Value									
Frequency (MHz)	Read Level (dBuV/m)	Antenna Factor (dB)	Cable Loss (dB)	Aux Factor (dB)	Preamp Factor (dB)	Level (dBuV/m)	Limit Line (dBuV/m)	Over Limit (dB)	Polarization
5350.00	44.51	31.97	7.11	2.61	41.89	44.31	68.20	-23.89	Horizontal
5350.00	43.95	31.97	7.11	2.61	41.89	43.75	68.20	-24.45	Vertical
Detector: Average Value									
Frequency (MHz)	Read Level (dBuV/m)	Antenna Factor (dB)	Cable Loss (dB)	Aux Factor (dB)	Preamp Factor (dB)	Level (dBuV/m)	Limit Line (dBuV/m)	Over Limit (dB)	Polarization
5350.00	37.41	31.97	7.11	2.61	41.89	37.21	54.00	-16.79	Horizontal
5350.00	37.25	31.97	7.11	2.61	41.89	37.05	54.00	-16.95	Vertical

Remark:

1. *Final Level = Receiver Read level + Antenna Factor + Cable Loss + Aux Factor – Preamplifier Factor.*
2. *The emission levels of other frequencies are very lower than the limit and not show in test report.*

Band 1 – 802.11n(HT20)									
Test channel: Lowest channel									
Detector: Peak Value									
Frequency (MHz)	Read Level (dBuV/m)	Antenna Factor (dB)	Cable Loss (dB)	Aux Factor (dB)	Preamp Factor (dB)	Level (dBuV/m)	Limit Line (dBuV/m)	Over Limit (dB)	Polarization
5150.00	44.25	31.53	7.05	2.54	41.93	43.44	68.20	-24.76	Horizontal
5150.00	44.91	31.53	7.05	2.54	41.93	44.10	68.20	-24.10	Vertical
Detector: Average Value									
Frequency (MHz)	Read Level (dBuV/m)	Antenna Factor (dB)	Cable Loss (dB)	Aux Factor (dB)	Preamp Factor (dB)	Level (dBuV/m)	Limit Line (dBuV/m)	Over Limit (dB)	Polarization
5150.00	37.48	31.53	7.05	2.54	41.93	36.67	54.00	-17.33	Horizontal
5150.00	38.29	31.53	7.05	2.54	41.93	37.48	54.00	-16.52	Vertical
Test channel: Highest channel									
Detector: Peak Value									
Frequency (MHz)	Read Level (dBuV/m)	Antenna Factor (dB)	Cable Loss (dB)	Aux Factor (dB)	Preamp Factor (dB)	Level (dBuV/m)	Limit Line (dBuV/m)	Over Limit (dB)	Polarization
5350.00	44.12	31.97	7.11	2.61	41.89	43.92	68.20	-24.28	Horizontal
5350.00	45.08	31.97	7.11	2.61	41.89	44.88	68.20	-23.32	Vertical
Detector: Average Value									
Frequency (MHz)	Read Level (dBuV/m)	Antenna Factor (dB)	Cable Loss (dB)	Aux Factor (dB)	Preamp Factor (dB)	Level (dBuV/m)	Limit Line (dBuV/m)	Over Limit (dB)	Polarization
5350.00	37.41	31.97	7.11	2.61	41.89	37.21	54.00	-16.79	Horizontal
5350.00	38.06	31.97	7.11	2.61	41.89	37.86	54.00	-16.14	Vertical

Remark:

1. *Final Level = Receiver Read level + Antenna Factor + Cable Loss + Aux Factor – Preamplifier Factor.*
2. *The emission levels of other frequencies are very lower than the limit and not show in test report.*

Band 4:

Band 4 – 802.11a									
Test channel: Lowest channel									
Detector: Peak Value									
Frequency (MHz)	Read Level (dBuV/m)	Antenna Factor (dB)	Cable Loss (dB)	Aux Factor (dB)	Preamp Factor (dB)	Level (dBuV/m)	Limit Line (dBuV/m)	Over Limit (dB)	Polarization
5650.00	45.13	32.36	7.45	2.69	41.85	45.78	68.20	-22.42	Horizontal
5700.00	47.11	32.38	7.60	2.72	41.90	47.91	105.20	-57.29	Horizontal
5720.00	46.28	32.39	7.64	2.72	41.92	47.11	110.80	-63.69	Horizontal
5725.00	50.81	32.39	7.69	2.72	41.94	51.67	122.20	-70.53	Horizontal
5650.00	45.34	32.36	7.45	2.69	41.85	45.99	68.20	-22.21	Vertical
5700.00	46.51	32.38	7.60	2.72	41.90	47.31	105.20	-57.89	Vertical
5720.00	45.89	32.39	7.64	2.72	41.92	46.72	110.80	-64.08	Vertical
5725.00	45.16	32.39	7.69	2.72	41.94	46.02	122.20	-76.18	Vertical
Test channel: Highest channel									
Detector: Peak Value									
Frequency (MHz)	Read Level (dBuV/m)	Antenna Factor (dB)	Cable Loss (dB)	Aux Factor (dB)	Preamp Factor (dB)	Level (dBuV/m)	Limit Line (dBuV/m)	Over Limit (dB)	Polarization
5850.00	47.02	32.44	7.90	2.69	42.03	48.02	122.20	-74.18	Horizontal
5855.00	45.88	32.44	7.90	2.72	42.03	46.91	110.80	-63.89	Horizontal
5875.00	45.26	32.45	7.91	2.72	42.03	46.31	105.20	-58.89	Horizontal
5925.00	45.02	32.47	7.92	2.72	42.04	46.09	68.20	-22.11	Horizontal
5850.00	44.89	32.44	7.90	2.69	42.03	45.89	122.20	-76.31	Vertical
5855.00	45.03	32.44	7.90	2.72	42.03	46.06	110.80	-64.74	Vertical
5875.00	45.61	32.45	7.91	2.72	42.03	46.66	105.20	-58.54	Vertical
5925.00	46.18	32.47	7.92	2.72	42.04	47.25	68.20	-20.95	Vertical

Remark:

1. *Final Level = Receiver Read level + Antenna Factor + Cable Loss + Aux Factor – Preamplifier Factor.*
2. *The emission levels of other frequencies are very lower than the limit and not show in test report.*

Band 4 – 802.11n(HT20)									
Test channel: Lowest channel									
Detector: Peak Value									
Frequency (MHz)	Read Level (dBuV/m)	Antenna Factor (dB)	Cable Loss (dB)	Aux Factor (dB)	Preamp Factor (dB)	Level (dBuV/m)	Limit Line (dBuV/m)	Over Limit (dB)	Polarization
5650.00	45.13	32.36	7.45	2.69	41.85	45.78	68.20	-22.42	Horizontal
5700.00	45.86	32.38	7.60	2.72	41.90	46.66	105.20	-58.54	Horizontal
5720.00	49.85	32.39	7.64	2.72	41.92	50.68	110.80	-60.12	Horizontal
5725.00	46.01	32.39	7.69	2.72	41.94	46.87	122.20	-75.33	Horizontal
5650.00	45.87	32.36	7.45	2.69	41.85	46.52	68.20	-21.68	Vertical
5700.00	46.32	32.38	7.60	2.72	41.90	47.12	105.20	-58.08	Vertical
5720.00	45.18	32.39	7.64	2.72	41.92	46.01	110.80	-64.79	Vertical
5725.00	45.29	32.39	7.69	2.72	41.94	46.15	122.20	-76.05	Vertical
Test channel: Highest channel									
Detector: Peak Value									
Frequency (MHz)	Read Level (dBuV/m)	Antenna Factor (dB)	Cable Loss (dB)	Aux Factor (dB)	Preamp Factor (dB)	Level (dBuV/m)	Limit Line (dBuV/m)	Over Limit (dB)	Polarization
5850.00	46.73	32.44	7.90	2.69	42.03	47.73	122.20	-74.47	Horizontal
5855.00	46.05	32.44	7.90	2.72	42.03	47.08	110.80	-63.72	Horizontal
5875.00	44.65	32.45	7.91	2.72	42.03	45.70	105.20	-59.50	Horizontal
5925.00	44.83	32.47	7.92	2.72	42.04	45.90	68.20	-22.30	Horizontal
5850.00	46.71	32.44	7.90	2.69	42.03	47.71	122.20	-74.49	Vertical
5855.00	44.38	32.44	7.90	2.72	42.03	45.41	110.80	-65.39	Vertical
5875.00	45.17	32.45	7.91	2.72	42.03	46.22	105.20	-58.98	Vertical
5925.00	44.96	32.47	7.92	2.72	42.04	46.03	68.20	-22.17	Vertical

Remark:

1. *Final Level = Receiver Read level + Antenna Factor + Cable Loss + Aux Factor – Preamplifier Factor.*
2. *The emission levels of other frequencies are very lower than the limit and not show in test report.*

6.7 Spurious Emission

6.7.1 Restricted Band

Test Requirement:	FCC Part15 E Section 15.407(b)				
Test Frequency Range:	4.5 GHz to 5.15 GHz and 5.35GHz to 5.46GHz				
Test site:	Measurement Distance: 3m				
Receiver setup:	Frequency	Detector	RBW	VBW	Remark
	Above 1GHz	Peak	1MHz	3MHz	Peak Value
		RMS	1MHz	3MHz	Average Value
Limit:	Frequency	Limit (dBuV/m @3m)	Remark		
	Above 1GHz	74.00	Peak Value		
		54.00	Average Value		
Test Procedure:	1. The EUT was placed on the top of a rotating table 1.5 meters above the ground at a 3 meter camber. The table was rotated 360 degrees to determine the position of the highest radiation. 2. The EUT was set 3 meters away from the interference-receiving antenna, which was mounted on the top of a variable-height antenna tower. 3. The antenna height is varied from one meter to four meters above the ground to determine the maximum value of the field strength. Both horizontal and vertical polarizations of the antenna are set to make the measurement. 4. For each suspected emission, the EUT was arranged to its worst case and then the antenna was tuned to heights from 1 meter to 4 meters and the rota table was turned from 0 degrees to 360 degrees to find the maximum reading. 5. The test-receiver system was set to Peak Detect Function and Specified Bandwidth with Maximum Hold Mode. 6. If the emission level of the EUT in peak mode was 10dB lower than the limit specified, then testing could be stopped and the peak values of the EUT would be reported. Otherwise the emissions that did not have 10dB margin would be re-tested one by one using peak, quasi-peak or average method as specified and then reported in a data sheet.				
Test setup:	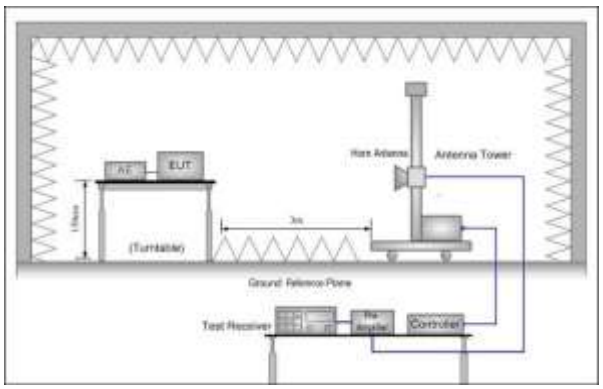				
Test Instruments:	Refer to section 5.10 for details				
Test mode:	Refer to section 5.3 for details				
Test results:	Passed(Refer to section 6.6)				

6.7.2 Unwanted Emissions out of the Restricted Bands

Test Requirement:	FCC Part15 C Section 15.209 and 15.205
Test Frequency Range:	30MHz to 40GHz
Test site:	Measurement Distance: 3m

Receiver setup:

Frequency	Detector	RBW	VBW	Remark
30MHz-1GHz	Quasi-peak	100kHz	300kHz	Quasi-peak Value
Above 1GHz	Peak	1MHz	3MHz	Peak Value
	RMS	1MHz	3MHz	Average Value

Limit:

Frequency	Limit (dBuV/m @3m)	Remark
30MHz-88MHz	40.0	Quasi-peak Value
88MHz-216MHz	43.5	Quasi-peak Value
216MHz-960MHz	46.0	Quasi-peak Value
960MHz-1GHz	54.0	Quasi-peak Value
Above 1GHz	68.20	Peak Value
	54.00	Average Value

Remark:
Above 1GHz limit:
E[dBμV/m] = EIRP[dBm] + 95.2=68.2 dBuV/m, for EIPR[dBm]=-27dBm.

Test Procedure:

1. The EUT was placed on the top of a rotating table 0.8m(below 1GHz)/1.5m(above 1GHz) above the ground at a 3 meter camber. The table was rotated 360 degrees to determine the position of the highest radiation.
2. The EUT was set 3 meters away from the interference-receiving antenna, which was mounted on the top of a variable-height antenna tower.
3. The antenna height is varied from one meter to four meters above the ground to determine the maximum value of the field strength. Both horizontal and vertical polarizations of the antenna are set to make the measurement.
4. For each suspected emission, the EUT was arranged to its worst case and then the antenna was tuned to heights from 1 meter to 4 meters and the rota table was turned from 0 degrees to 360 degrees to find the maximum reading.
5. The test-receiver system was set to Peak Detect Function and Specified Bandwidth with Maximum Hold Mode.
6. If the emission level of the EUT in peak mode was 10dB lower than the limit specified, then testing could be stopped and the peak values of the EUT would be reported. Otherwise the emissions that did not have 10dB margin would be re-tested one by one using peak, quasi-peak or average method as specified and then reported in a data sheet.

Test setup:

Below 1GHz

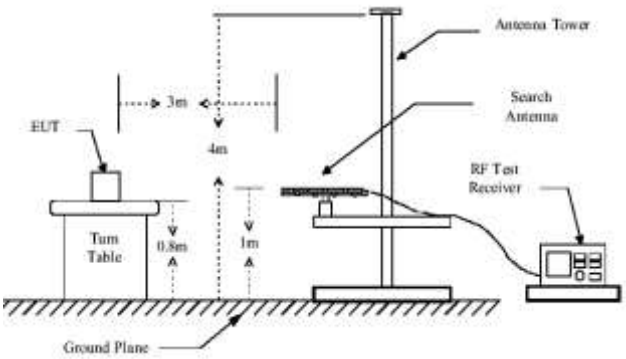

Above 1GHz

	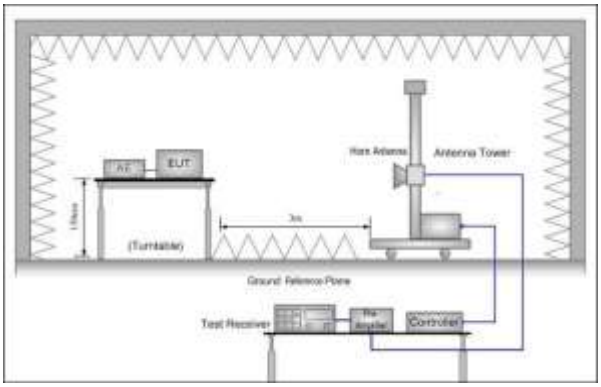
Test Instruments:	Refer to section 5.10 for details
Test mode:	Refer to section 5.3 for details
Test results:	Passed

Measurement Data (worst case):

Waist:

Below 1GHz

Product Name:	Health Management Exoskeleton	**Product Model:**	Mercury-Sports-1901
Test By:	Janet	**Test mode:**	5G Wi-Fi Tx mode
Test Frequency:	30 MHz ~ 1 GHz	**Polarization:**	Vertical
Test Voltage:	AC 120/60Hz	**Environment:**	Temp: 24℃ Huni: 57%

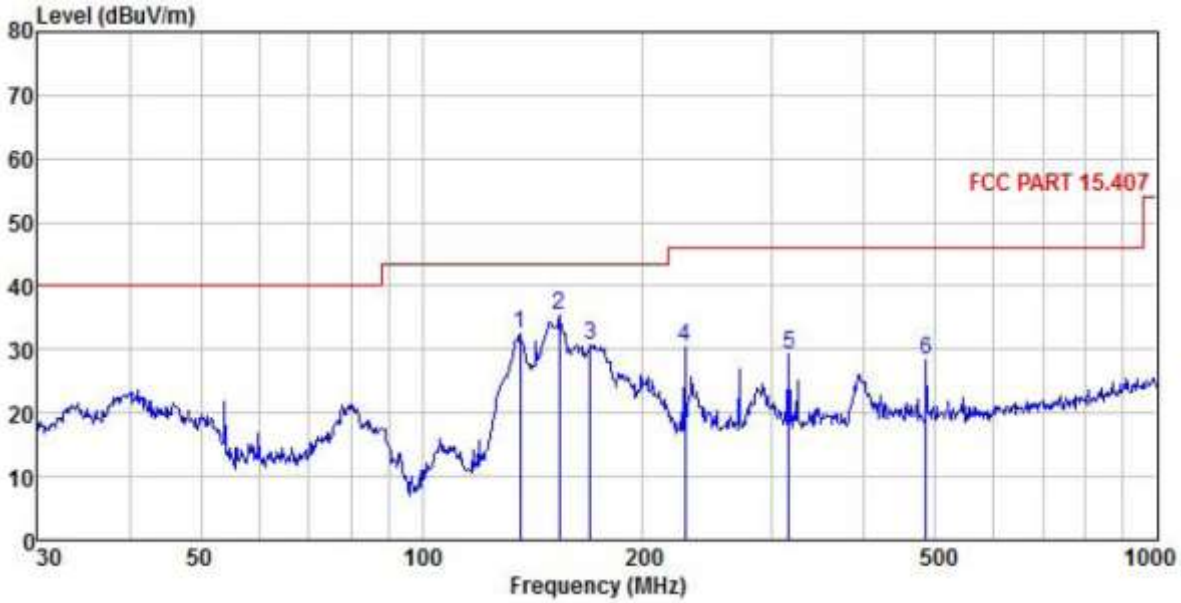

	Freq	Read Level	Antenna Factor	Cable Loss	Aux Factor	Preamp Factor	Level	Limit Line	Over Limit	Remark
	MHz	dBuV	dB/m	dB	dB	dB	dBuV/m	dBuV/m	dB	
1	135.982	47.49	13.56	0.59	0.00	29.29	32.35	43.50	-11.15	QP
2	153.739	49.69	14.38	0.62	0.00	29.19	35.50	43.50	-8.00	QP
3	169.599	42.66	16.40	0.65	0.00	29.05	30.66	43.50	-12.84	QP
4	227.691	39.99	18.42	0.75	0.00	28.66	30.50	46.00	-15.50	QP
5	315.481	38.10	18.73	0.88	0.00	28.49	29.22	46.00	-16.78	QP
6	485.609	36.84	19.35	1.09	0.00	28.93	28.35	46.00	-17.65	QP

Remark:

1. *Final Level = Receiver Read level + Antenna Factor + Cable Loss – Preamplifier Factor.*
2. *The emission levels of other frequencies are very lower than the limit and not show in test report.*

Product Name:	Health Management Exoskeleton	**Product Model:**	Mercury-Sports-1901
Test By:	Janet	**Test mode:**	5G Wi-Fi Tx mode
Test Frequency:	30 MHz ~ 1 GHz	**Polarization:**	Horizontal
Test Voltage:	AC 120/60Hz	**Environment:**	Temp: 24℃ Huni: 57%

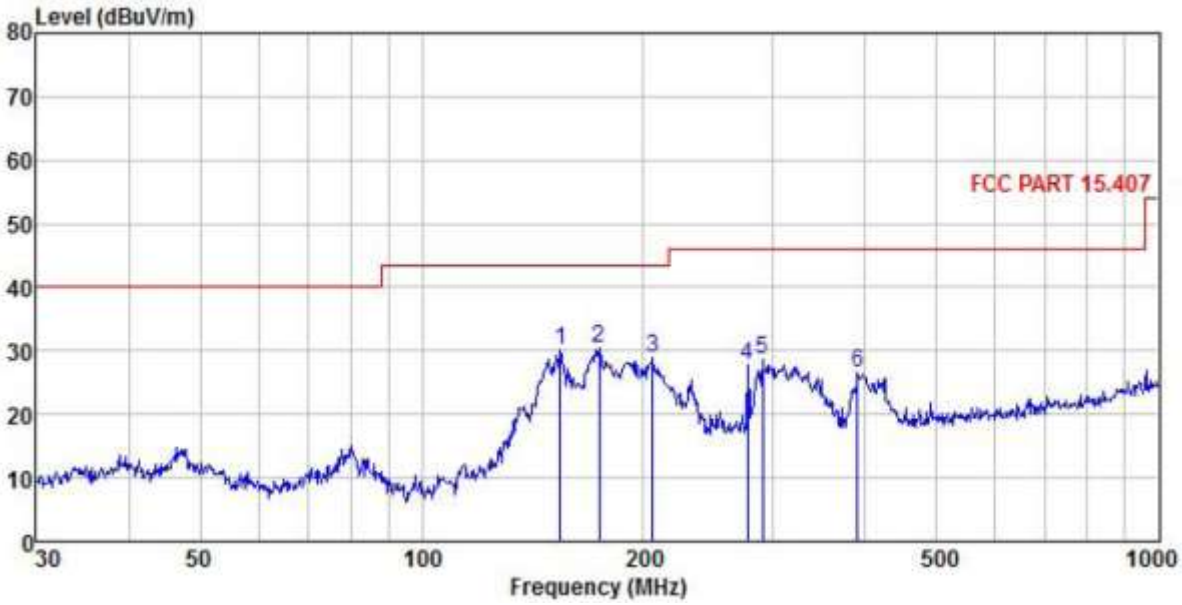

	Freq	Read Level	Antenna Factor	Cable Loss	Aux Factor	Preamp Factor	Level	Limit Line	Over Limit	Remark
	MHz	dBuV	dB/m	dB	dB	dB	dBuV/m	dBuV/m	dB	
1	154.279	44.15	14.39	0.62	0.00	29.18	29.98	43.50	-13.52	QP
2	173.814	42.05	16.72	0.67	0.00	29.02	30.42	43.50	-13.08	QP
3	205.675	38.69	18.32	0.73	0.00	28.79	28.95	43.50	-14.55	QP
4	277.094	36.75	18.61	0.83	0.00	28.49	27.70	46.00	-18.30	QP
5	290.017	37.66	18.66	0.85	0.00	28.47	28.70	46.00	-17.30	QP
6	390.723	35.29	19.04	0.98	0.00	28.74	26.57	46.00	-19.43	QP

Remark:

1. *Final Level = Receiver Read level + Antenna Factor + Cable Loss – Preamplifier Factor.*
2. *The emission levels of other frequencies are very lower than the limit and not show in test report.*

Above 1GHz:
Waist:
Band 1:

Band 1 – 802.11a									
Test channel: Lowest channel									
Detector: Peak Value									
Frequency (MHz)	Read Level (dBuV)	Antenna Factor (dB/m)	Cable Loss (dB)	Aux Factor (dB)	Preamp Factor (dB)	Level (dBuV/m)	Limit Line (dBuV/m)	Over Limit (dB)	Polarization
10360.00	38.97	38.83	9.82	3.95	41.97	49.60	68.20	-18.60	Vertical
10360.00	37.92	38.83	9.82	3.95	41.97	48.55	68.20	-19.65	Horizontal
Detector: Average Value									
Frequency (MHz)	Read Level (dBuV)	Antenna Factor (dB/m)	Cable Loss (dB)	Aux Factor (dB)	Preamp Factor (dB)	Level (dBuV/m)	Limit Line (dBuV/m)	Over Limit (dB)	Polarization
10360.00	32.23	38.83	9.82	3.95	41.97	42.86	54.00	-11.14	Vertical
10360.00	31.87	38.83	9.82	3.95	41.97	42.50	54.00	-11.50	Horizontal
Test channel: Middle channel									
Detector: Peak Value									
Frequency (MHz)	Read Level (dBuV)	Antenna Factor (dB/m)	Cable Loss (dB)	Aux Factor (dB)	Preamp Factor (dB)	Level (dBuV/m)	Limit Line (dBuV/m)	Over Limit (dB)	Polarization
10400.00	39.33	38.87	9.85	3.98	41.95	50.08	68.20	-18.12	Vertical
10400.00	37.69	38.87	9.85	3.98	41.95	48.44	68.20	-19.76	Horizontal
Detector: Average Value									
Frequency (MHz)	Read Level (dBuV)	Antenna Factor (dB/m)	Cable Loss (dB)	Aux Factor (dB)	Preamp Factor (dB)	Level (dBuV/m)	Limit Line (dBuV/m)	Over Limit (dB)	Polarization
10400.00	32.29	38.87	9.85	3.98	41.95	43.04	54.00	-10.96	Vertical
10400.00	31.82	38.87	9.85	3.98	41.95	42.57	54.00	-11.43	Horizontal
Test channel: Highest channel									
Detector: Peak Value									
Frequency (MHz)	Read Level (dBuV)	Antenna Factor (dB/m)	Cable Loss (dB)	Aux Factor (dB)	Preamp Factor (dB)	Level (dBuV/m)	Limit Line (dBuV/m)	Over Limit (dB)	Polarization
10480.00	39.29	38.94	9.96	4.02	41.88	50.33	68.20	-17.87	Vertical
10480.00	37.56	38.94	9.96	4.02	41.88	48.60	68.20	-19.60	Horizontal
Detector: Average Value									
Frequency (MHz)	Read Level (dBuV)	Antenna Factor (dB/m)	Cable Loss (dB)	Aux Factor (dB)	Preamp Factor (dB)	Level (dBuV/m)	Limit Line (dBuV/m)	Over Limit (dB)	Polarization
10480.00	32.64	38.94	9.96	4.02	41.88	43.68	54.00	-10.32	Vertical
10480.00	31.78	38.94	9.96	4.02	41.88	42.82	54.00	-11.18	Horizontal

Remark:
1. *Final Level = Receiver Read level + Antenna Factor + Cable Loss + Aux Factor – Preamplifier Factor.*
2. *The emission levels of other frequencies are very lower than the limit and not show in test report.*

Band 1 – 802.11n(HT20)									
Test channel: Lowest channel									
Detector: Peak Value									
Frequency (MHz)	Read Level (dBuV)	Antenna Factor (dB/m)	Cable Loss (dB)	Aux Factor (dB)	Preamp Factor (dB)	Level (dBuV/m)	Limit Line (dBuV/m)	Over Limit (dB)	Polarization
10360.00	39.40	38.83	9.82	3.95	41.97	50.03	68.20	-18.17	Vertical
10360.00	37.49	38.83	9.82	3.95	41.97	48.12	68.20	-20.08	Horizontal
Detector: Average Value									
Frequency (MHz)	Read Level (dBuV)	Antenna Factor (dB/m)	Cable Loss (dB)	Aux Factor (dB)	Preamp Factor (dB)	Level (dBuV/m)	Limit Line (dBuV/m)	Over Limit (dB)	Polarization
10360.00	32.65	38.83	9.82	3.95	41.97	43.28	54.00	-10.72	Vertical
10360.00	31.51	38.83	9.82	3.95	41.97	42.14	54.00	-11.86	Horizontal
Test channel: Middle channel									
Detector: Peak Value									
Frequency (MHz)	Read Level (dBuV)	Antenna Factor (dB/m)	Cable Loss (dB)	Aux Factor (dB)	Preamp Factor (dB)	Level (dBuV/m)	Limit Line (dBuV/m)	Over Limit (dB)	Polarization
10400.00	39.25	38.87	9.85	3.98	41.95	50.00	68.20	-18.20	Vertical
10400.00	37.79	38.87	9.85	3.98	41.95	48.54	68.20	-19.66	Horizontal
Detector: Average Value									
Frequency (MHz)	Read Level (dBuV)	Antenna Factor (dB/m)	Cable Loss (dB)	Aux Factor (dB)	Preamp Factor (dB)	Level (dBuV/m)	Limit Line (dBuV/m)	Over Limit (dB)	Polarization
10400.00	32.15	38.87	9.85	3.98	41.95	42.90	54.00	-11.10	Vertical
10400.00	31.86	38.87	9.85	3.98	41.95	42.61	54.00	-11.39	Horizontal
Test channel: Highest channel									
Detector: Peak Value									
Frequency (MHz)	Read Level (dBuV)	Antenna Factor (dB/m)	Cable Loss (dB)	Aux Factor (dB)	Preamp Factor (dB)	Level (dBuV/m)	Limit Line (dBuV/m)	Over Limit (dB)	Polarization
10480.00	39.11	38.94	9.96	4.02	41.88	50.15	68.20	-18.05	Vertical
10480.00	37.35	38.94	9.96	4.02	41.88	48.39	68.20	-19.81	Horizontal
Detector: Average Value									
Frequency (MHz)	Read Level (dBuV)	Antenna Factor (dB/m)	Cable Loss (dB)	Aux Factor (dB)	Preamp Factor (dB)	Level (dBuV/m)	Limit Line (dBuV/m)	Over Limit (dB)	Polarization
10480.00	32.61	38.94	9.96	4.02	41.88	43.65	54.00	-10.35	Vertical
10480.00	31.36	38.94	9.96	4.02	41.88	42.40	54.00	-11.60	Horizontal

Remark:
1. *Final Level = Receiver Read level + Antenna Factor + Cable Loss + Aux Factor – Preamplifier Factor.*
2. *The emission levels of other frequencies are very lower than the limit and not show in test report.*

Band 4:

Band 4 – 802.11a									
Test channel: Lowest channel									
Detector: Peak Value									
Frequency (MHz)	Read Level (dBuV)	Antenna Factor (dB/m)	Cable Loss (dB)	Aux Factor (dB)	Preamp Factor (dB)	Level (dBuV/m)	Limit Line (dBuV/m)	Over Limit (dB)	Polarization
11490.00	37.73	39.50	10.81	4.21	42.29	45.75	74.00	-28.25	Vertical
11490.00	38.15	39.50	10.81	4.21	42.29	46.17	74.00	-27.83	Horizontal
Detector: Average Value									
Frequency (MHz)	Read Level (dBuV)	Antenna Factor (dB/m)	Cable Loss (dB)	Aux Factor (dB)	Preamp Factor (dB)	Level (dBuV/m)	Limit Line (dBuV/m)	Over Limit (dB)	Polarization
11490.00	31.96	39.50	10.81	4.21	42.29	39.98	54.00	-14.02	Vertical
11490.00	32.62	39.50	10.81	4.21	42.29	40.64	54.00	-13.36	Horizontal
Test channel: Middle channel									
Detector: Peak Value									
Frequency (MHz)	Read Level (dBuV)	Antenna Factor (dB/m)	Cable Loss (dB)	Aux Factor (dB)	Preamp Factor (dB)	Level (dBuV/m)	Limit Line (dBuV/m)	Over Limit (dB)	Polarization
11570.00	37.71	39.52	10.78	4.21	42.27	45.74	74.00	-28.26	Vertical
11570.00	38.55	39.52	10.78	4.21	42.27	46.58	74.00	-27.42	Horizontal
Detector: Average Value									
Frequency (MHz)	Read Level (dBuV)	Antenna Factor (dB/m)	Cable Loss (dB)	Aux Factor (dB)	Preamp Factor (dB)	Level (dBuV/m)	Limit Line (dBuV/m)	Over Limit (dB)	Polarization
11570.00	31.64	39.52	10.78	4.21	42.27	39.67	54.00	-14.33	Vertical
11570.00	32.20	39.52	10.78	4.21	42.27	40.23	54.00	-13.77	Horizontal
Test channel: Highest channel									
Detector: Peak Value									
Frequency (MHz)	Read Level (dBuV)	Antenna Factor (dB/m)	Cable Loss (dB)	Aux Factor (dB)	Preamp Factor (dB)	Level (dBuV/m)	Limit Line (dBuV/m)	Over Limit (dB)	Polarization
11650.00	37.98	39.53	10.76	4.21	42.26	46.01	74.00	-27.99	Vertical
11650.00	37.82	39.53	10.76	4.21	42.26	45.85	74.00	-28.15	Horizontal
Detector: Average Value									
Frequency (MHz)	Read Level (dBuV)	Antenna Factor (dB/m)	Cable Loss (dB)	Aux Factor (dB)	Preamp Factor (dB)	Level (dBuV/m)	Limit Line (dBuV/m)	Over Limit (dB)	Polarization
11650.00	31.92	39.53	10.76	4.21	42.26	39.95	54.00	-14.05	Vertical
11650.00	32.47	39.53	10.76	4.21	42.26	40.50	54.00	-13.50	Horizontal

Remark:
1. *Final Level = Receiver Read level + Antenna Factor + Cable Loss + Aux Factor – Preamplifier Factor.*
2. *The emission levels of other frequencies are very lower than the limit and not show in test report.*

Band 4 – 802.11n(HT20)									
Test channel: Lowest channel									
Detector: Peak Value									
Frequency (MHz)	Read Level (dBuV)	Antenna Factor (dB/m)	Cable Loss (dB)	Aux Factor (dB)	Preamp Factor (dB)	Level (dBuV/m)	Limit Line (dBuV/m)	Over Limit (dB)	Polarization
11490.00	37.35	39.50	10.81	4.21	42.29	45.37	74.00	-28.63	Vertical
11490.00	38.20	39.50	10.81	4.21	42.29	46.22	74.00	-27.78	Horizontal
Detector: Average Value									
Frequency (MHz)	Read Level (dBuV)	Antenna Factor (dB/m)	Cable Loss (dB)	Aux Factor (dB)	Preamp Factor (dB)	Level (dBuV/m)	Limit Line (dBuV/m)	Over Limit (dB)	Polarization
11490.00	32.28	39.50	10.81	4.21	42.29	40.30	54.00	-13.70	Vertical
11490.00	32.85	39.50	10.81	4.21	42.29	40.87	54.00	-13.13	Horizontal
Test channel: Middle channel									
Detector: Peak Value									
Frequency (MHz)	Read Level (dBuV)	Antenna Factor (dB/m)	Cable Loss (dB)	Aux Factor (dB)	Preamp Factor (dB)	Level (dBuV/m)	Limit Line (dBuV/m)	Over Limit (dB)	Polarization
11570.00	37.05	39.52	10.78	4.21	42.27	45.08	74.00	-28.92	Vertical
11570.00	38.23	39.52	10.78	4.21	42.27	46.26	74.00	-27.74	Horizontal
Detector: Average Value									
Frequency (MHz)	Read Level (dBuV)	Antenna Factor (dB/m)	Cable Loss (dB)	Aux Factor (dB)	Preamp Factor (dB)	Level (dBuV/m)	Limit Line (dBuV/m)	Over Limit (dB)	Polarization
11570.00	32.08	39.52	10.78	4.21	42.27	40.11	54.00	-13.89	Vertical
11570.00	32.36	39.52	10.78	4.21	42.27	40.39	54.00	-13.61	Horizontal
Test channel: Highest channel									
Detector: Peak Value									
Frequency (MHz)	Read Level (dBuV)	Antenna Factor (dB/m)	Cable Loss (dB)	Aux Factor (dB)	Preamp Factor (dB)	Level (dBuV/m)	Limit Line (dBuV/m)	Over Limit (dB)	Polarization
11650.00	37.71	39.53	10.76	4.21	42.26	45.74	74.00	-28.26	Vertical
11650.00	38.19	39.53	10.76	4.21	42.26	46.22	74.00	-27.78	Horizontal
Detector: Average Value									
Frequency (MHz)	Read Level (dBuV)	Antenna Factor (dB/m)	Cable Loss (dB)	Aux Factor (dB)	Preamp Factor (dB)	Level (dBuV/m)	Limit Line (dBuV/m)	Over Limit (dB)	Polarization
11650.00	32.32	39.53	10.76	4.21	42.26	40.35	54.00	-13.65	Vertical
11650.00	33.21	39.53	10.76	4.21	42.26	41.24	54.00	-12.76	Horizontal

Remark:
1. *Final Level = Receiver Read level + Antenna Factor + Cable Loss + Aux Factor – Preamplifier Factor.*
2. *The emission levels of other frequencies are very lower than the limit and not show in test report.*

6.8 Frequency stability

Test Requirement:	FCC Part15 E Section 15.407 (g)
Limit:	Manufacturers of U-NII devices are responsible for ensuring frequency stability such that an emission is maintained within the band of operation under all conditions of normal operation as specified in the user's manual.
Test setup:	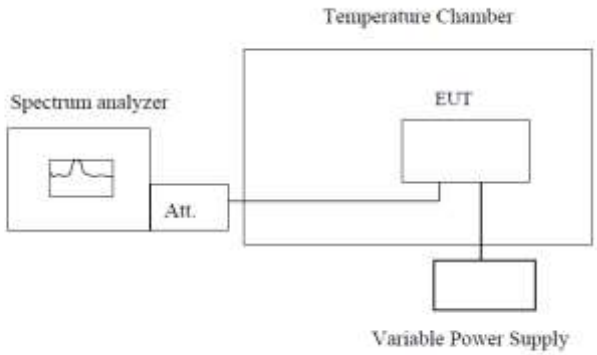 **Note :** Measurement setup for testing on Antenna connector
Test procedure:	1. The EUT is installed in an environment test chamber with external power source. 2. Set the chamber to operate at 50 centigrade and external power source to output at nominal voltage of EUT. 3. A sufficient stabilization period at each temperature is used prior to each frequency measurement. 4. When temperature is stabled, measure the frequency stability. 5. The test shall be performed under -30 to 50 centigrade and 85 to 115 percent of the nominal voltage. Change setting of chamber and external power source to complete all conditions.
Test Instruments:	Refer to section 5.10 for details
Test mode:	Refer to section 5.3 for details
Test results:	Passed

Measurement Data (the worst channel):

Band 1:

Voltage vs. Frequency Stability (Lowest channel=5180MHz)

Test conditions		Frequency(MHz)	Max. Deviation (ppm)
Temp(℃)	Voltage(ac)		
20	3.50V	5179.997643	0.45
	3.80V	5179.974779	4.87
	4.35V	5179.963951	6.96

Temperature vs. Frequency Stability (Lowest channel=5180MHz)

Test conditions		Frequency(MHz)	Max. Deviation (ppm)
Voltage(ac)	Temp(℃)		
3.80V	-20	5179.987033	2.50
	-10	5179.995377	0.89
	0	5179.968421	6.10
	10	5179.987556	2.40
	20	5179.996681	0.64
	30	5179.974290	4.96
	40	5179.963775	6.99
	50	5179.974929	4.84

Band 4:

Voltage vs. Frequency Stability (Lowest channel=5745MHz)

Test conditions		Frequency(MHz)	Max. Deviation (ppm)
Temp(℃)	Voltage(ac)		
20	3.50V	5744.974766	4.39
	3.80V	5744.993381	1.15
	4.35V	5744.998588	0.25

Temperature vs. Frequency Stability (Lowest channel=5745MHz)

Test conditions		Frequency(MHz)	Max. Deviation (ppm)
Voltage(ac)	Temp(℃)		
3.80V	-20	5744.994798	0.91
	-10	5744.993693	1.10
	0	5744.994771	0.91
	10	5744.985355	2.55
	20	5744.993864	1.07
	30	5744.994481	0.96
	40	5744.999347	0.11
	50	5744.992458	1.31