ACCREDITED
Certificate # 2861.01

GRGTEST

TEST REPORT

Verified Code: 245377

Report No.:	E202007232517-1	**Application No.:**	E202007232517
Client:	Guangdong Bestcore Internet of Things Technology Co.,Ltd.		
Address:	Room 1011, 10F, ShuMao Building, 6 Xiangxing Road, Torch Development District, Zhongshan, China		
Sample Description:	Bluetooth module		
Model:	BC204		
Test Specification:	FCC 47 CFR Part 15 Subpart C KDB 558074 D01: DTS measurement guidance v0502 ANSI C63.10:2013		
Receipt Date:	2020-07-27		
Test Date:	2020-07-28 to 2020-09-08		
Issue Date:	2020-09-16		
Test Result:	Pass		

Prepared By:	**Reviewed By:**	**Approved By:**
Test Engineer	Technical Manager	Manager
Wu Haoting		GUANGZHOU GRG METROLOGY & TEST CO.,LTD. GRGTEST APPROVED(03)

Other Aspects:

Note: Note

Abbreviations: *ok / P = passed; fail / F = failed; n.a. / N = not applicable;*

The test result in this test report refers exclusively to the presented test sample. This report shall not be reproduced except in full, without the written approval of GRGT.

DIRECTIONS OF TEST

1. **This station carries out test task according to the national regulation of verifications which can be traced to National Primary Standards and BIPM.**

2. **The test report merely corresponds to the test sample. It is not permitted to copy extracts of these test result without the written permission of the test laboratory.**

3. **If there is any objection concerning the test, the client should inform the laboratory within 15 days from the date of receiving the test report.**

TABLE OF CONTENTS

1. TEST RESULT SUMMARY 4

2. GENERAL DESCRIPTION OF EUT 5

2.1. APPLICANT 5
2.2. MANUFACTURER 5
2.3. FACTORY 5
2.4. BASIC DESCRIPTION OF EQUIPMENT UNDER TEST 5
2.5. TEST OPERATION MODE 6
2.6. LOCAL SUPPORTIVE 6

3. LABORATORY AND ACCREDITATIONS 7

3.1. LABORATORY 7
3.2. ACCREDITATIONS 7
3.3. MEASUREMENT UNCERTAINTY 7

4. LIST OF USED TEST EQUIPMENT AT GRGT 8

5. CONDUCTED EMISSION MEASUREMENT 9

5.1. LIMITS 9
5.2. TEST PROCEDURES 9
5.3. TEST SETUP 10
5.4. DATA SAMPLE 10
5.5. TEST RESULTS 11

6. RADIATED SPURIOUS EMISSIONS 13

6.1. LIMITS 13
6.2. TEST PROCEDURES (PLEASE REFER TO MEASUREMENT STANDARD) 13
6.3. TEST SETUP 17
6.4. DATA SAMPLE 18
6.5. TEST RESULTS 19

7. 6DB BANDWIDTH 28

7.1. LIMITS 28
7.2. TEST PROCEDURES 28
7.3. TEST SETUP 28
7.4. TEST RESULTS 28

8. MAXIMUM PEAK OUTPUT POWER 31

8.1. LIMITS 31
8.2. TEST PROCEDURES 31
8.3. TEST SETUP 31
8.4. TEST RESULTS 31

9. POWER SPECTRAL DENSITY 32

9.1. LIMITS 32
9.2. TEST PROCEDURES 32
9.3. TEST SETUP 32
9.4. TEST RESULTS 33

10. CONDUCTED BAND EDGES AND SPURIOUS EMISSIONS 35

10.1. LIMITS 35
10.2. TEST PROCEDURES 35
10.3. TEST SETUP 35
10.4. TEST RESULTS 36

11. RESTRICTED BANDS OF OPERATION 39

11.1. LIMITS 39
11.2. TEST PROCEDURES 39

11.3. TEST SETUP 40
11.4. TEST RESULTS 41

1. TEST RESULT SUMMARY

Technical Requirements		
FCC Part 15 Subpart C KDB 558074 D01: DTS measurement guidance v0502		
Limit / Severity	**Item**	**Result**
§15.207	Conducted emission AC power port	Pass
§15.247(b)(1)	Conducted output power for FHSS	N/A
§15.247(b)(3)	Conducted output power for DTS	Pass
§15.247(e)	Power spectral density	Pass
§15.247(a)(2)	6dB bandwidth	Pass
§15.247(a)(1)	20dB Occupied bandwidth	N/A
--	99% Occupied Bandwidth	N/A
§15.247(a)(1)	Carrier frequency separation	N/A
§15.247(a)(1)(iii)	Number of hopping frequencies	N/A
§15.247(a)(1)(iii)	Dwell Time	N/A
§15.247(d)	Spurious RF conducted emissions	Pass
§15.247(d)	Band edge	Pass
§15.247(d) & §15.209 & §15.205	Spurious radiated emissions for transmitter	Pass
§15.203	Antenna requirement	Pass

The EUT has one antenna. The antenna is internal antenna.
The max gain of antenna is 0dBi.which accordance 15.203.is considered sufficient to comply with the provisions of this section.

2. GENERAL DESCRIPTION OF EUT

2.1. APPLICANT

Name:	Guangdong Bestcore Internet of Things Technology Co.,Ltd.
Address:	Room 1011, 10F, ShuMao Building, 6 Xiangxing Road, Torch Development District, Zhongshan, China

2.2. MANUFACTURER

Name:	Guangdong Bestcore Internet of Things Technology Co.,Ltd.
Address:	Room 1011, 10F, ShuMao Building, 6 Xiangxing Road, Torch Development District, Zhongshan, China

2.3. FACTORY

Factory 1

Name :	Guangdong Bestcore Internet of Things Technology Co.,Ltd.
Address :	Room 1011, 10F, ShuMao Building, 6 Xiangxing Road, Torch Development District, Zhongshan, China

2.4. BASIC DESCRIPTION OF EQUIPMENT UNDER TEST

Equipment:	Bluetooth module
Model No.:	BC204
Adding Model:	/
Trade Name:	Best-core
FCC ID:	2AW3Q-BC204
Power supply:	DC3.3V
Frequency Range:	2402 ~ 2480MHz
Transmit Power:	0.7dBm
Modulation type:	GFSK for 1Mbps
Channel space:	2MHz
Antenna Specification:	Internal antenna with 0dBi gain (Max)
Temperature Range:	0 ℃ ~ +35 ℃
Hardware Version:	1.0
Software Version:	1.0
I/O Port:	/

Note: /

2.5. TEST OPERATION MODE

Test Item	Mode No.	Description of the modes
Conducted Emission	1	Continuously Transmitting (CH0)
Radiated Emission	1	Continuously Transmitting (CH0, CH19, CH39)

2.6. LOCAL SUPPORTIVE

Name of Equipment	Manufacturer	Model	Serial Number	Note
Notebook	LENOVO	TianYi 310-14ISK	MP18DLC6	/
Adapter(Notebook)	HUAWEI	HW-050200C01	P78516J4203679	/
Cable				
USB Cable	/	/	/	/
AC Cable	/	/	/	/
DC Cable	/	/	/	/

Test software:

Software version	Test level
UartAssist	3

3. LABORATORY AND ACCREDITATIONS

3.1. LABORATORY

The tests & measurements refer to this report were performed by Shenzhen EMC Laboratory of Guangzhou GRG Metrology & Test Co,. Ltd.

Add : Address: No.1301 Guanguang Road Xinlan Community, Guanlan Street, Longhua District Shenzhen, 518110, People's Republic of China

P.C. : 518000

Tel : 0755-61180008

Fax : 0755-61180008

3.2. ACCREDITATIONS

A2LA	Certificate Number 2861.01

3.3. MEASUREMENT UNCERTAINTY

Where relevant, the following measurement uncertainty levels have been estimated for tests performed on the EUT as specified in CISPR 16-4-2:

Measurement		Frequency	Uncertainty
Radiated Emission	Horizontal	30MHz～1000MHz	4.3dB
		1GHz～18GHz	5.6dB
	Vertical	30MHz～1000MHz	4.3dB
		1GHz～18GHz	5.6dB
Conduction Emission		9 kHz ~ 150 kHz	2.8 dB
		150 kHz ~ 10 MHz	2.8 dB
		10 MHz ~ 30 MHz	2.2 dB

This uncertainty represents an expanded uncertainty factor of *k*=2.

4. LIST OF USED TEST EQUIPMENT AT GRGT

Name of Equipment	Manufacturer	Model	Serial Number	Calibration Due
Conducted Emissions				
EMI TEST RECEIVER	R&S	ESCI	100783	2020/11/27
LISN(EUT)	R&S	ENV216	101543	2021/03/24
Radiated Spurious Emission& Restricted bands of operation				
Spectrum Analyzer	Agilent	N9010A	MY52221469	2020/11/18
Bilog Antenna	Schwarzbeck	VULB 9163	01279	2021/03/14
Horn Antenna	Schwarzbeck	BBHA 9120D(1201)	02143	2020/12/28
Board-Band Horn Antenna	Schwarzbeck	BBHA 9170	BBHA 9170-497	2020/11/30
Amplifier	Tonscend	TAP9E6343	AP20E806065	2021/06/28
Amplifier	Tonscend	TAP01018048	AP20E8060075	2021/06/28
Test S/W	Tonscend	JS36-RE/2.5.1.5		
6 dB Bandwidth				
Spectrum Analyzer	Agilent	N9010A	MY52221469	2020/11/18
Peak/AV Output Power				
Pulse Power Sentor	Agilent	MA2411B	1126150	2021/04/13
Power Meter	Anritsu	ML2495A	1204003	2021/04/13
Conducted band edges and Spurious Emission				
Spectrum Analyzer	Agilent	N9010A	MY52221469	2020/11/18
Peak Output Spectral Density Measurement				
Spectrum Analyzer	Agilent	N9010A	MY52221469	2020/11/18

5. CONDUCTED EMISSION MEASUREMENT

5.1. LIMITS

Frequency range	Limits (dBμV)	
	Quasi-peak	Average
150kHz ～ 0.5MHz	66～56	56～46
0.5 MHz ～ 5 MHz	56	46
5 MHz ～ 30 MHz	60	50

NOTE: (1) The lower limit shall apply at the transition frequencies.
(2) The limit decreases in line with the logarithm of the frequency in the range of 150 kHz to 0.5MHz.

5.2. TEST PROCEDURES

Procedure of Preliminary Test

Test procedures follow ANSI C63.4:2014.

For measurement of the disturbance voltage the equipment under test (EUT) is connected to the power supply mains and any other extended network via one or more artificial network(s). An EUT, whether intended to be grounded or not, and which is to be used on a table is configured as follows:

– Either the bottom or the rear of the EUT shall be at a controlled distance of 40 cm from a reference ground plane. This ground plane is normally the wall or floor of a shielded room. It may also be a grounded metal plane of at least 2 m by 2 m. This is physically accomplished as follows:

1) place the EUT on a table of non-conducting material which is at least 80 cm high. Place the EUT so that it is 40 cm from the wall of the shielded room, or

2) place the EUT on a table of non-conducting material which is 40 cm high so that the bottom of the EUT is 40 cm above the ground plane;

– All other conductive surfaces of the EUT shall be at least 80 cm from the reference ground plane;

– The EUT are placed on the floor that one side of the housings is 40 cm from the vertical reference ground plane and other metallic parts;

– Interconnecting cables that hang closer than 40 cm to the ground plane shall be folded back and forth forming a bundle 30 cm to 40 cm long, hanging approximately in the middle between the ground plane and the table.

– I/O cables that are connected to a peripheral shall be bundled in the centre. The end of the cable may be terminated if required using correct terminating impedance. The total length shall not exceed 1 m.

The test mode(s) described in Item 2.4 were scanned during the preliminary test. After the preliminary scan, we found the test mode described in Item 2.4 producing the highest emission level. The EUT configuration and cable configuration of the above highest emission levels were recorded for reference of the final test.

Procedure of Final Test

EUT and support equipment were set up on the test bench as per the configuration with highest emission level in the preliminary test. A scan was taken on both power lines, recording at least the six highest emissions. Emission frequency and amplitude were recorded into a computer in which correction factors were used to calculate the emission level and compare reading to the applicable limit. The test data of the worst-case condition(s) was recorded.

5.3. TEST SETUP

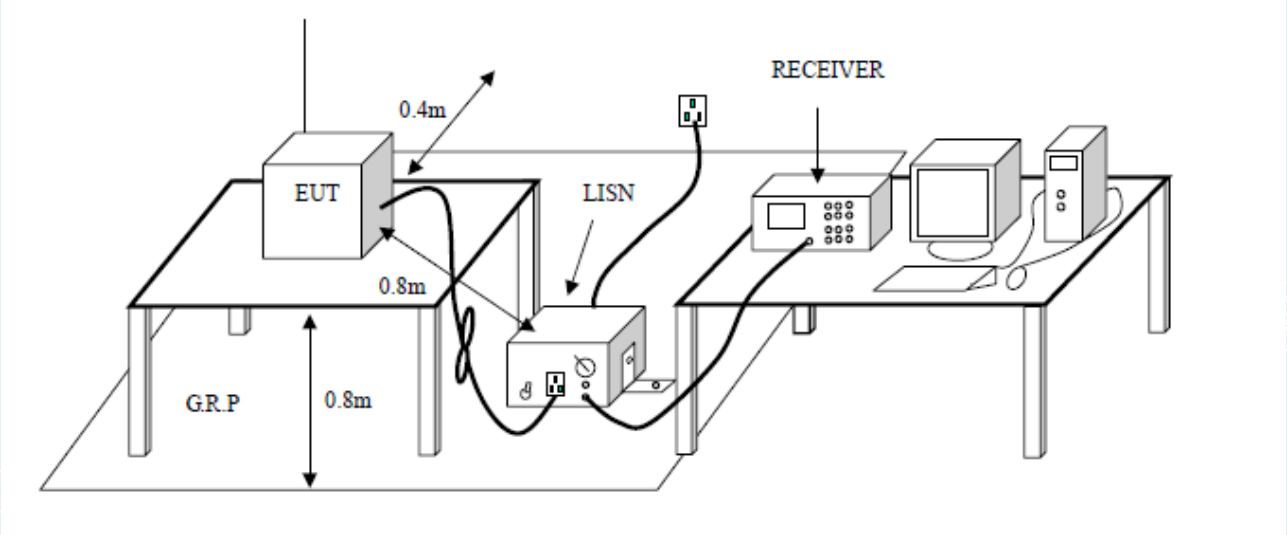

5.4. DATA SAMPLE

Frequency (MHz)	QuasiPeak Reading (dBuV)	Average Reading (dBuV)	Correction Factor (dB)	QuasiPeak Result (dBuV)	Average Result (dBuV)	QuasiPeak Limit (dBuV)	Average Limit (dBuV)	QuasiPeak Margin (dB)	Average Margin (dB)	Remark (Pass/Fail)
X.XXXX	32.69	25.65	11.52	44.21	37.17	65.78	55.79	-21.57	-18.62	Pass

Factor = Insertion loss of LISN + Cable Loss
Result = Quasi-peak Reading/ Average Reading + Factor
Limit =Limit stated in standard
Margin = Result (dBuV) – Limit (dBuV)

5.5. TEST RESULTS

Model No.	BC204	**RBW,VBW**	9 kHz
Environmental Conditions	23.9°C, 44% RH	**Test Mode**	Mode 1
Tested By	WuJunLin	**Line**	L
Tested Date	2020/07/31	**Test Voltage**	AC120V/60Hz

(The chart below shows the highest readings taken from the final data.)

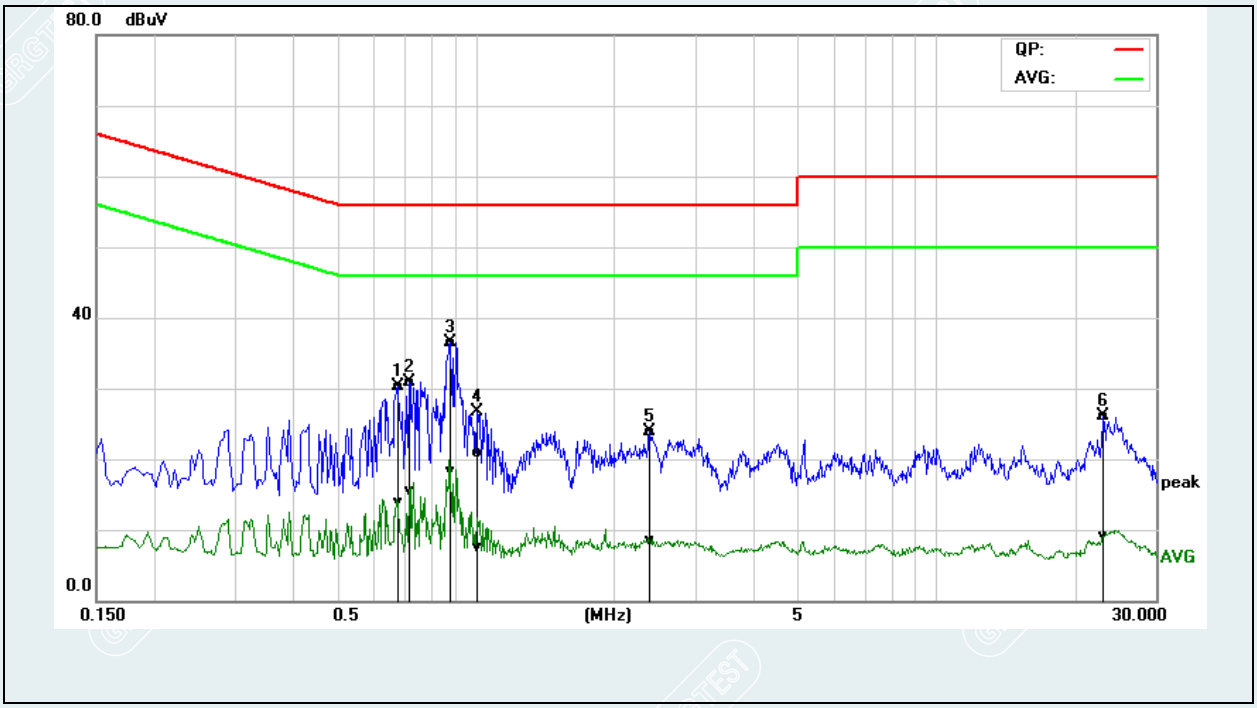

No.	Frequency	QuasiPeak reading	Average reading	Correction factor	QuasiPeak result	Average result	QuasiPeak limit	Average limit	QuasiPeak margin	Average margin	Remark
	(MHz)	(dBuV)	(dBuV)	(dB)	(dBuV)	(dBuV)	(dBuV)	(dBuV)	(dB)	(dB)	
1	0.6780	20.58	4.20	9.68	30.26	13.88	56.00	46.00	-25.74	-32.12	Pass
2	0.7180	21.28	5.81	9.68	30.96	15.49	56.00	46.00	-25.04	-30.51	Pass
3*	0.8820	26.80	8.53	9.70	36.50	18.23	56.00	46.00	-19.50	-27.77	Pass
4	1.0100	11.18	-2.23	9.71	20.89	7.48	56.00	46.00	-35.11	-38.52	Pass
5	2.3900	14.16	-1.27	9.74	23.90	8.47	56.00	46.00	-32.10	-37.53	Pass
6	23.1380	15.97	-1.05	10.07	26.04	9.02	60.00	50.00	-33.96	-40.98	Pass

REMARKS: *L = Live Line*

Model No.	BC204	**RBW,VBW**	9 kHz
Environmental Conditions	23.9°C, 44% RH	**Test Mode**	Mode 1
Tested By	WuJunLin	**Line**	N
Tested Date	2020/07/31	**Test Voltage**	AC120V/60Hz

(The chart below shows the highest readings taken from the final data.)

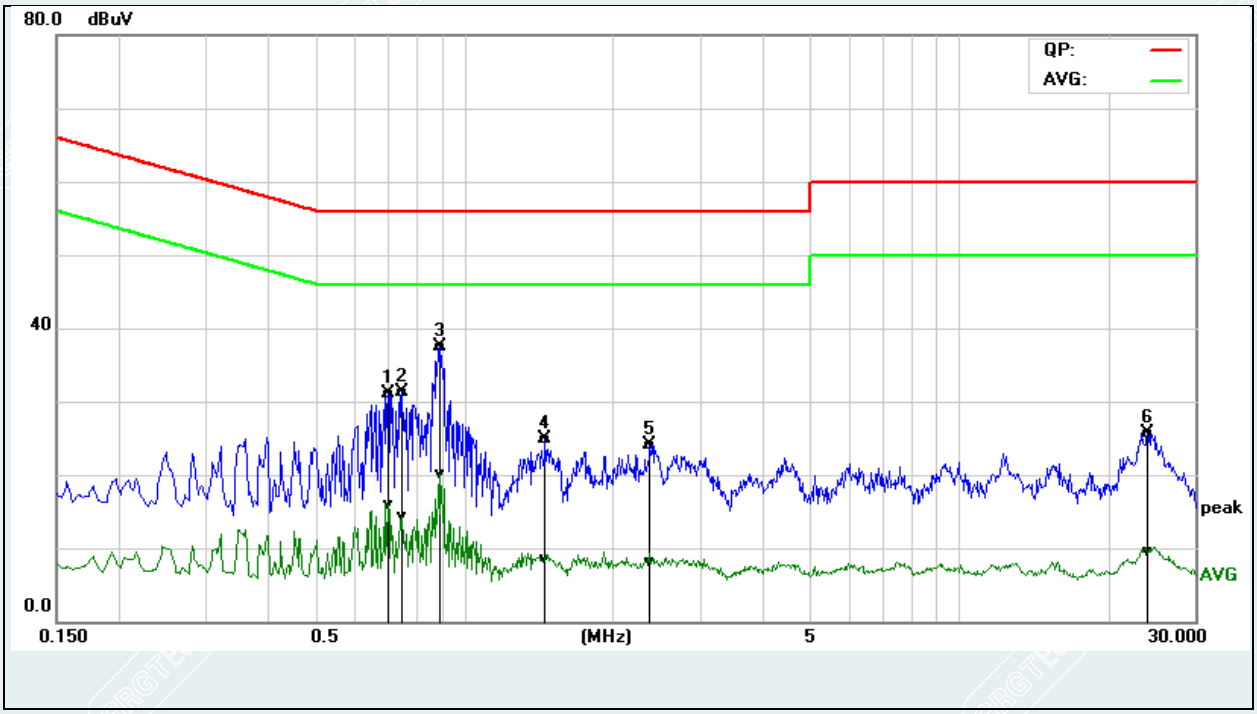

No.	Frequency	QuasiPeak reading	Average reading	Correction factor	QuasiPeak result	Average result	QuasiPeak limit	Average limit	QuasiPeak margin	Average margin	Remark
	(MHz)	(dBuV)	(dBuV)	(dB)	(dBuV)	(dBuV)	(dBuV)	(dBuV)	(dB)	(dB)	
1	0.7019	21.48	6.16	9.68	31.16	15.84	56.00	46.00	-24.84	-30.16	Pass
2	0.7500	21.60	4.59	9.68	31.28	14.27	56.00	46.00	-24.72	-31.73	Pass
3*	0.8940	27.76	10.39	9.70	37.46	20.09	56.00	46.00	-18.54	-25.91	Pass
4	1.4580	15.15	-1.27	9.72	24.87	8.45	56.00	46.00	-31.13	-37.55	Pass
5	2.3820	14.41	-1.61	9.74	24.15	8.13	56.00	46.00	-31.85	-37.87	Pass
6	24.0980	15.58	-0.59	10.10	25.68	9.51	60.00	50.00	-34.32	-40.49	Pass

REMARKS: *N = Neutral Line.*

6. RADIATED SPURIOUS EMISSIONS

6.1. LIMITS

In any 100 kHz bandwidth outside the frequency band in which the spread spectrum or digitally modulated intentional radiator is operating, the radio frequency power that is produced by the intentional radiator shall be at least 20 dB below that in the 100 kHz bandwidth within the band that contains the highest level of the desired power, based on either an RF conducted or a radiated measurement, provided the transmitter demonstrates compliance with the peak conducted power limits. If the transmitter complies with the conducted power limits based on the use of RMS averaging over a time interval, as permitted under paragraph (b)(3) of this section, the attenuation required under this paragraph shall be 30 dB instead of 20 dB. Attenuation below the general limits specified in §15.209(a) is not required.

Frequency (MHz)	Quasi-peak(μV/m)	Measurement distance(m)	Quasi-peak(dBμV/m)@distance 3m
0.009-0.490	2400/F(kHz)	300	53.8~88.5
0.490-1.705	24000/F(kHz)	30	43~53.8
1.705-30.0	30	30	49.5
30 ~ 88	100	3	40
88~216	150	3	43.5
216 ~ 960	200	3	46
Above 960	500	3	54

NOTE: (1) The lower limit shall apply at the transition frequencies.

6.2. TEST PROCEDURES (please refer to measurement standard)

1) Sequence of testing 9 kHz to 30 MHz

Setup:

--- The equipment was set up to simulate a typical usage like described in the user manual or described by manufacturer.

--- If the EUT is a tabletop system, a rotatable table with 0.8 m height is used.

--- If the EUT is a floor standing device, it is placed on the ground.

--- Auxiliary equipment and cables were positioned to simulate normal operation conditions.

--- The AC power port of the EUT (if available) is connected to a power outlet below the turntable.

--- The measurement distance is 3 meter.

--- The EUT was set into operation.

Pre measurement:

--- The turntable rotates from 0 °to 315 °using 45 °steps.

--- The antenna height is 0.8 meter.

--- At each turntable position the analyzer sweeps with peak detection to find the maximum of all emissions

Final measurement:

--- Identified emissions during the pre measurement the software maximizes by rotating the turntable position (0 °to 360 °) and by rotating the elevation axes (0 °to 360 °).

--- The final measurement will be done in the position (turntable and elevation) causing the highest emissions with QPK detector.

--- The final levels, frequency, measuring time, bandwidth, turntable position, correction factor, margin to the limit and limit will be recorded. Also a plot with the graph of the pre measurement and the limit will be stored.

2) Sequence of testing 30 MHz to 1 GHz

Setup:

--- The equipment was set up to simulate a typical usage like described in the user manual or described by manufacturer.

--- If the EUT is a tabletop system, a table with 0.8 m height is used, which is placed on the ground plane.

--- If the EUT is a floor standing device, it is placed on the ground plane with insulation between both.

--- Auxiliary equipment and cables were positioned to simulate normal operation conditions

--- The AC power port of the EUT (if available) is connected to a power outlet below the turntable.

--- The measurement distance is 3 meter.

--- The EUT was set into operation.

Pre measurement:

--- The turntable rotates from 0 °to 315 °using 45 °steps.

--- The antenna is polarized vertical and horizontal.

--- The antenna height changes from 1 to 3 meter.

--- At each turntable position, antenna polarization and height the analyzer sweeps three times in peak to find the maximum of all emissions.

Final measurement:

--- The final measurement will be performed with minimum the six highest peaks.

--- According to the maximum antenna and turntable positions of premeasurement the software maximize the peaks by changing turntable position (±45 °) and antenna movement between 1 and 4 meter.

--- The final measurement will be done with QP detector with an EMI receiver.

--- The final levels, frequency, measuring time, bandwidth, antenna height, antenna polarization, turntable angle, correction factor, margin to the limit and limit will be recorded. Also a plot with the graph of the premeasurement with marked maximum final measurements and the limit will be stored.

3) Sequence of testing 1 GHz to 18 GHz

Setup:

--- The equipment was set up to simulate a typical usage like described in the user manual or described by manufacturer.

--- If the EUT is a tabletop system, a rotatable table with 1.5 m height is used.

--- If the EUT is a floor standing device, it is placed on the ground plane with insulation between both.

--- Auxiliary equipment and cables were positioned to simulate normal operation conditions

--- The AC power port of the EUT (if available) is connected to a power outlet below the turntable.

--- The measurement distance is 3 meter.

--- The EUT was set into operation.

Pre measurement:

--- The turntable rotates from 0 °to 315 °using 45 °steps.

--- The antenna is polarized vertical and horizontal.

--- The antenna height scan range is 1 meter to 2.5 meter.

--- At each turntable position and antenna polarization the analyzer sweeps with peak detection to find the maximum of all emissions.

Final measurement:

--- The final measurement will be performed with minimum the six highest peaks.

--- According to the maximum antenna and turntable positions of premeasurement the software maximize the peaks by changing turntable position (±45°) and antenna movement between 1 and 4 meter. This procedure is repeated for both antenna polarizations.

--- The final measurement will be done in the position (turntable, EUT-table and antenna polarization) causing the highest emissions with Peak and Average detector.
--- The final levels, frequency, measuring time, bandwidth, turntable position, EUT-table position, antenna polarization, correction factor, margin to the limit and limit will be recorded. Also a plot with the graph of the pre measurement with marked maximum final measurements and the limit will be stored.

4) Sequence of testing above 18 GHz
Setup:

--- The equipment was set up to simulate a typical usage like described in the user manual or described by manufacturer.

--- If the EUT is a tabletop system, a rotatable table with 1.5 m height is used.

--- If the EUT is a floor standing device, it is placed on the ground plane with insulation between both.

--- Auxiliary equipment and cables were positioned to simulate normal operation conditions

--- The AC power port of the EUT (if available) is connected to a power outlet below the turntable.

--- The measurement distance is 1 meter.

--- The EUT was set into operation.

Pre measurement:

--- The antenna is moved spherical over the EUT in different polarisations of the antenna.

Final measurement:

--- The final measurement will be performed at the position and antenna orientation for all detected emissions that were found during the premeasurements with Peak and Average detector.
--- The final levels, frequency, measuring time, bandwidth, correction factor, margin to the limit and limit will be recorded. Also a plot with the graph of the premeasurement and the limit will be stored.

NOTE: The resolution bandwidth of test receiver/spectrum analyzer is 1MHz and the video bandwidth is 3MHz for RMS Average (Duty cycle < 98%) for Average detection (AV) at frequency above 1GHz, then the measurement results was added to a correction factor (10 log(1/duty cycle)).

6.3. TEST SETUP

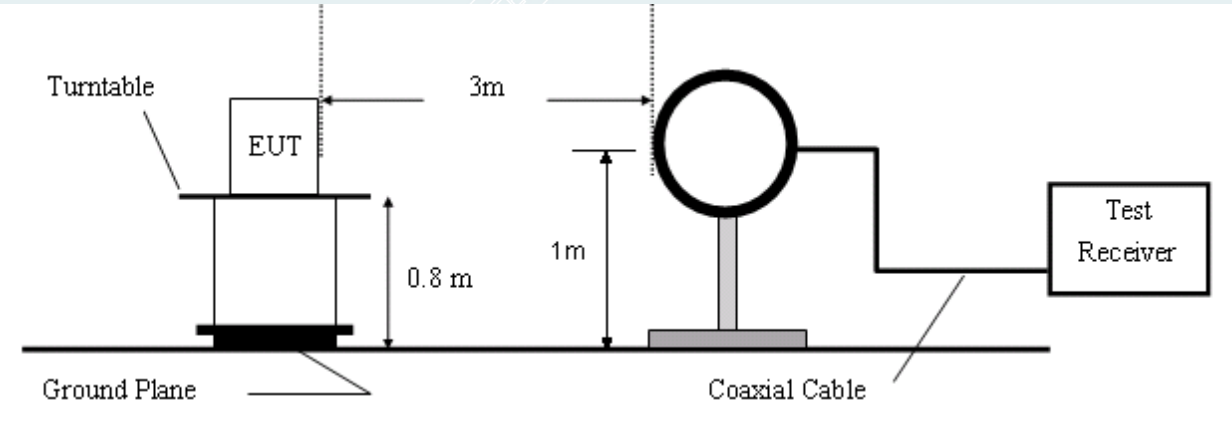

Figure 1. 9KHz to 30MHz radiated emissions test configuration

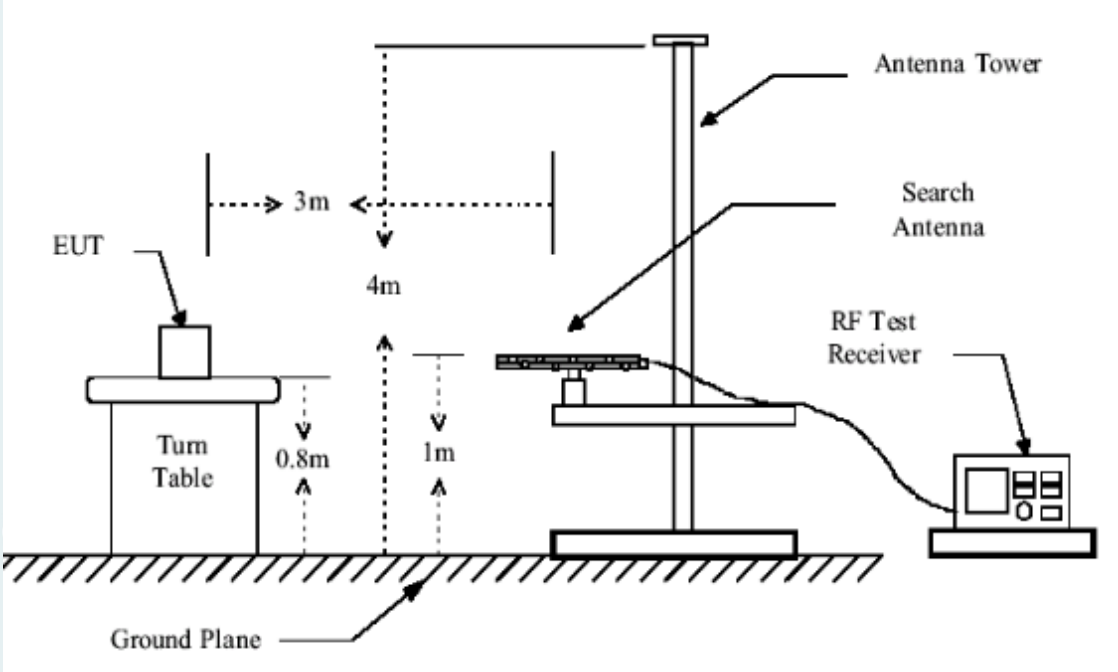

Figure 2. 30MHz to 1GHz radiated emissions test configuration

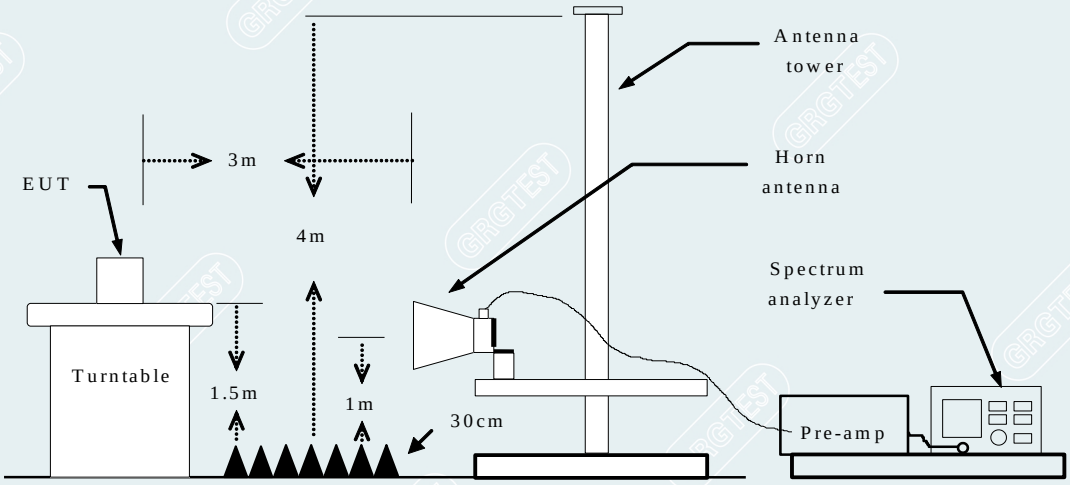

Figure 3. Above 1GHz radiated emissions test configuration

6.4. DATA SAMPLE

30MHz to 1GHz

No.	Frequency (MHz)	Reading (dBuV/m)	Correct Factor(dB/m)	Result (dBuV/m)	Limit (dBuV/m)	Margin (dB)	Remark	Pole
xxx	xxx	37.06	-15.48	21.58	40.00	-18.42	QP	Vertical

Above 1 GHz

No.	Frequency (MHz)	Reading (dBuV/m)	Correct Factor(dB/m)	Result (dBuV/m)	Limit (dBuV/m)	Margin (dB)	Remark	Pole
xxx	xxx	65.45	-11.12	54.33	74.00	-19.67	Peak	Vertical
xxx	xxx	63.00	-11.12	51.88	54.00	-2.12	AVG	Vertical

Frequency (MHz) = Emission frequency in MHz

Ant.Pol. (H/V) = Antenna polarization

Reading (dBuV) = Uncorrected Analyzer / Receiver reading

Correction Factor (dB/m) = Antenna factor + Cable loss – Amplifier gain

Result (dBuV/m) = Reading (dBuV) + Correction Factor (dB/m)

Limit (dBuV/m) = Limit stated in standard

Margin (dB) = Remark Result (dBuV/m) – Limit (dBuV/m)

Peak = Peak Reading

QP = Quasi-peak Reading

AVG = Average Reading

6.5. TEST RESULTS

30MHz to 1GHz:

Mode: TX

Lowest channel (2402MHz) Date: 2020/09/07

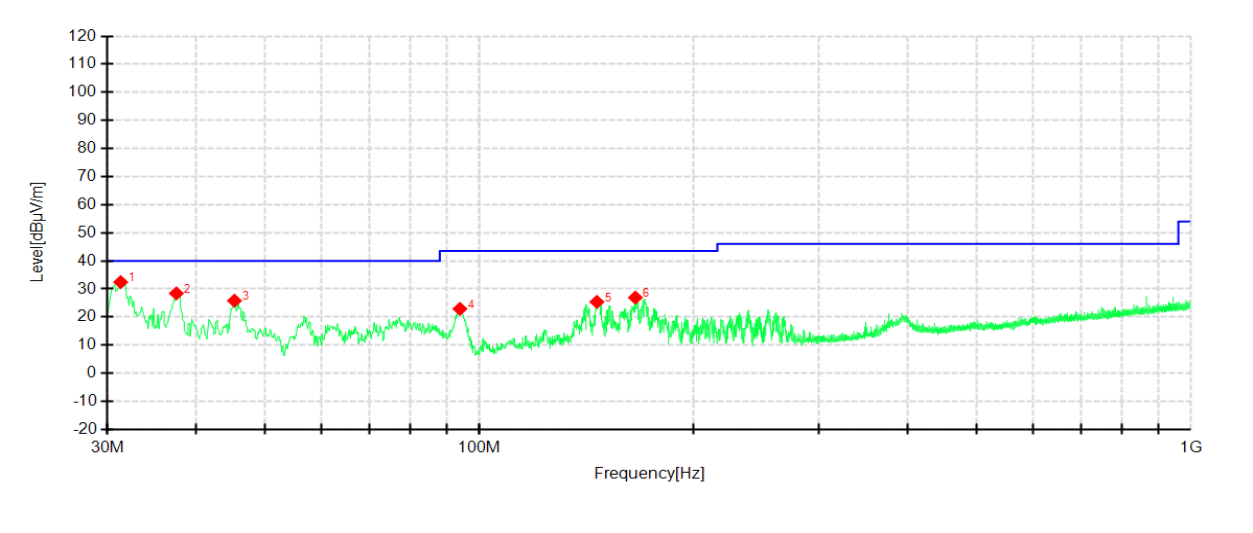

Suspected Data List										
NO.	Freq. [MHz]	Reading [dBµV/m]	Level [dBµV/m]	Factor [dB]	Limit [dBµV/m]	Margin [dB]	Trace	Height [cm]	Angle [°]	Polarity
1	31.3338	62.83	32.44	-30.39	40.00	7.56	PK	100	236	Vertical
2	37.5175	58.41	28.42	-29.99	40.00	11.58	PK	100	134	Vertical
3	45.2775	55.80	25.81	-29.99	40.00	14.19	PK	100	250	Vertical
4	93.8988	55.10	22.92	-32.18	43.50	20.58	PK	200	148	Vertical
5	146.2788	52.28	25.41	-26.87	43.50	18.09	PK	200	206	Vertical
6	165.6788	54.26	26.94	-27.32	43.50	16.56	PK	200	229	Vertical

Remark:

1 No emission found between lowest internal used/generated frequency to 30MHz.

2 Data of measurement within this frequency range in the table above the reading of PK detector are more 6dB than QP limit, therefore it's unnecessary to performed QP scan.

3 The IF bandwidth of Receiver between 30MHz to 1GHz was 120 kHz.

Mode: TX
Lowest channel (2402MHz) Date: 2020/09/07

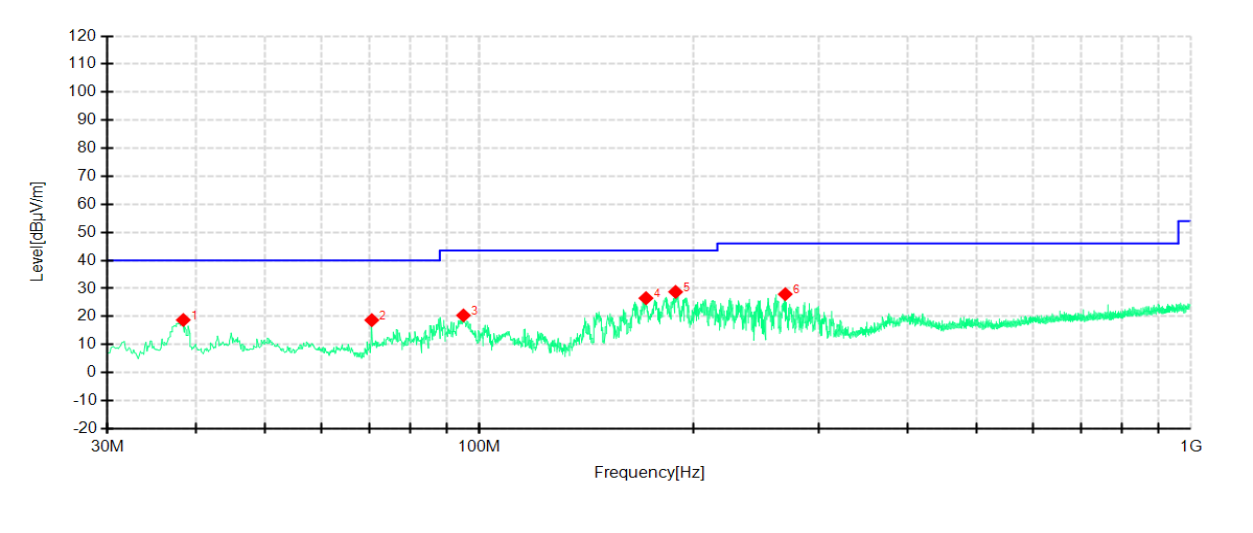

Suspected Data List										
NO.	Freq. [MHz]	Reading [dBµV/m]	Level [dBµV/m]	Factor [dB]	Limit [dBµV/m]	Margin [dB]	Trace	Height [cm]	Angle [°]	Polarity
1	38.3663	49.02	18.76	-30.26	40.00	21.24	PK	200	119	Horizontal
2	70.6188	51.22	18.70	-32.52	40.00	21.30	PK	100	3	Horizontal
3	94.9900	51.20	20.38	-30.82	43.50	23.12	PK	200	343	Horizontal
4	171.4988	58.16	26.53	-31.63	43.50	16.97	PK	200	301	Horizontal
5	188.7163	58.66	28.77	-29.89	43.50	14.73	PK	200	119	Horizontal
6	269.1050	55.20	27.95	-27.25	46.00	18.05	PK	100	176	Horizontal

Remark:

1 No emission found between lowest internal used/generated frequency to 30MHz.

2 Data of measurement within this frequency range in the table above the reading of PK detector are more 6dB than QP limit, therefore it's unnecessary to performed QP scan.

3 The IF bandwidth of Receiver between 30MHz to 1GHz was 120 kHz.

Mode: TX
Middle channel (2440MHz) Date: 2020/09/07

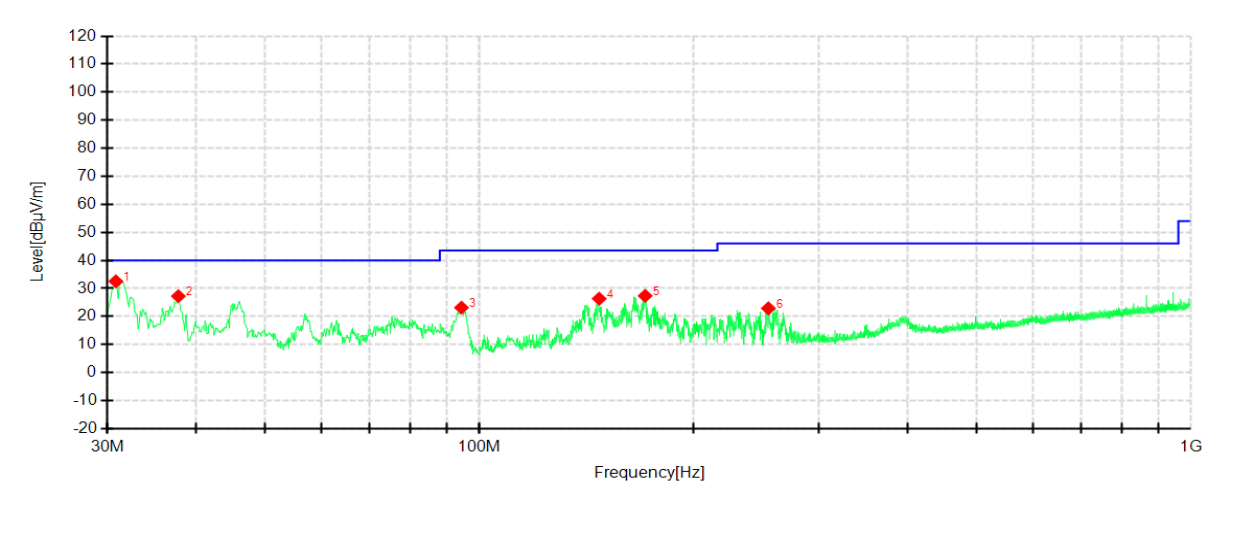

Suspected Data List										
NO.	Freq. [MHz]	Reading [dBµV/m]	Level [dBµV/m]	Factor [dB]	Limit [dBµV/m]	Margin [dB]	Trace	Height [cm]	Angle [°]	Polarity
1	30.8488	62.96	32.54	-30.42	40.00	7.46	PK	100	146	Vertical
2	37.7600	57.22	27.24	-29.98	40.00	12.76	PK	100	226	Vertical
3	94.3838	55.31	23.16	-32.15	43.50	20.34	PK	200	69	Vertical
4	147.3700	53.16	26.35	-26.81	43.50	17.15	PK	200	204	Vertical
5	171.0138	54.85	27.36	-27.49	43.50	16.14	PK	200	219	Vertical
6	254.7975	51.18	22.89	-28.29	46.00	23.11	PK	200	126	Vertical

Remark:

1 No emission found between lowest internal used/generated frequency to 30MHz.

2 Data of measurement within this frequency range in the table above the reading of PK detector are more 6dB than QP limit, therefore it's unnecessary to performed QP scan.

3 The IF bandwidth of Receiver between 30MHz to 1GHz was 120 kHz.

Mode: TX
Middle channel (2440MHz) Date: 2020/09/07

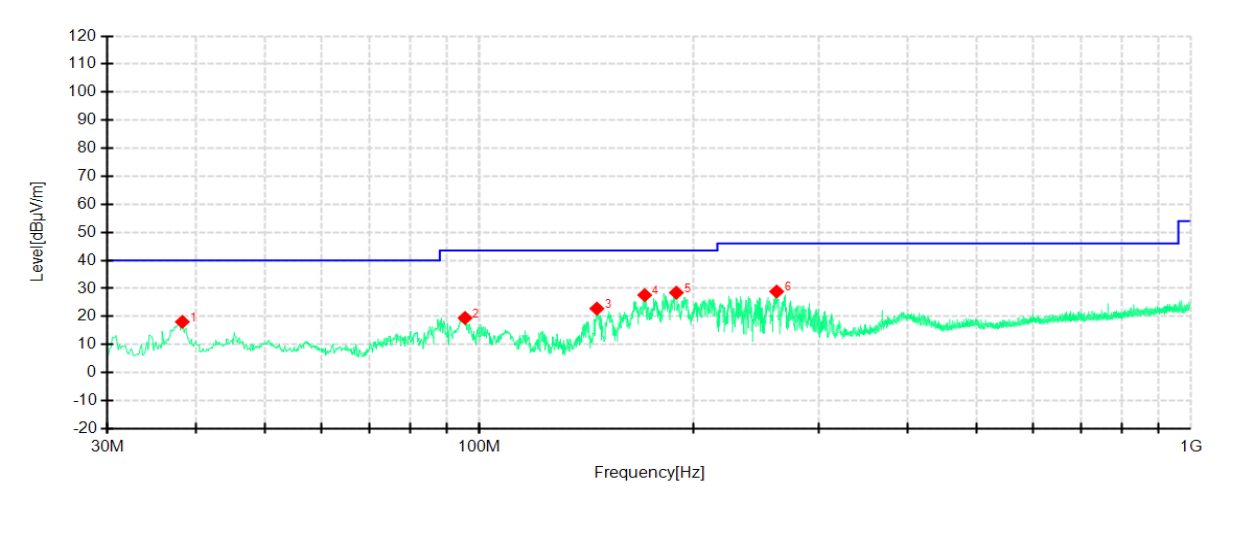

Suspected Data List										
NO.	Freq. [MHz]	Reading [dBµV/m]	Level [dBµV/m]	Factor [dB]	Limit [dBµV/m]	Margin [dB]	Trace	Height [cm]	Angle [°]	Polarity
1	38.2450	48.37	18.08	-30.29	40.00	21.92	PK	200	132	Horizontal
2	95.4750	50.21	19.48	-30.73	43.50	24.02	PK	200	118	Horizontal
3	146.2788	55.44	22.82	-32.62	43.50	20.68	PK	200	269	Horizontal
4	170.7713	59.26	27.62	-31.64	43.50	15.88	PK	200	269	Horizontal
5	189.2013	58.30	28.50	-29.80	43.50	15.00	PK	200	139	Horizontal
6	261.7088	56.35	28.90	-27.45	46.00	17.10	PK	100	162	Horizontal

Remark:

1 No emission found between lowest internal used/generated frequency to 30MHz.

2 Data of measurement within this frequency range in the table above the reading of PK detector are more 6dB than QP limit, therefore it's unnecessary to performed QP scan.

3 The IF bandwidth of Receiver between 30MHz to 1GHz was 120 kHz.

Mode: TX
Highest channel (2480MHz) Date: 2020/09/07

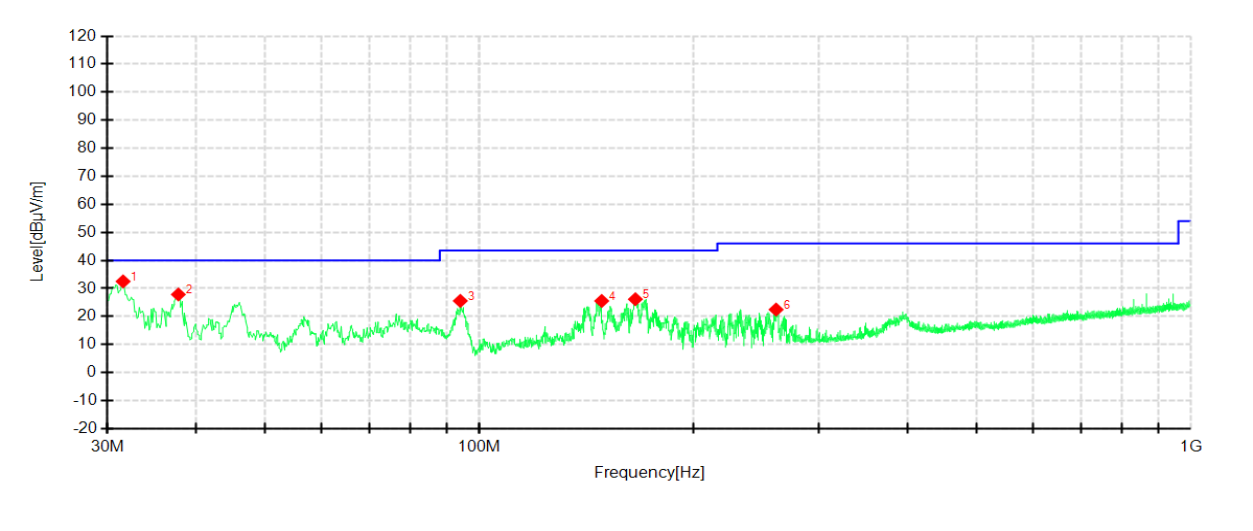

Suspected Data List										
NO.	Freq. [MHz]	Reading [dBµV/m]	Level [dBµV/m]	Factor [dB]	Limit [dBµV/m]	Margin [dB]	Trace	Height [cm]	Angle [°]	Polarity
1	31.5763	62.88	32.50	-30.38	40.00	7.50	PK	100	119	Vertical
2	37.7600	57.83	27.85	-29.98	40.00	12.15	PK	100	148	Vertical
3	94.0200	57.73	25.56	-32.17	43.50	17.94	PK	200	313	Vertical
4	148.5825	52.28	25.54	-26.74	43.50	17.96	PK	100	256	Vertical
5	165.6788	53.47	26.15	-27.32	43.50	17.35	PK	200	226	Vertical
6	261.2238	50.60	22.47	-28.13	46.00	23.53	PK	200	147	Vertical

Remark:

1 No emission found between lowest internal used/generated frequency to 30MHz.

2 Data of measurement within this frequency range in the table above the reading of PK detector are more 6dB than QP limit, therefore it's unnecessary to performed QP scan.

3 The IF bandwidth of Receiver between 30MHz to 1GHz was 120 kHz.

Mode: TX
Highest channel (2480MHz) Date: 2020/09/07

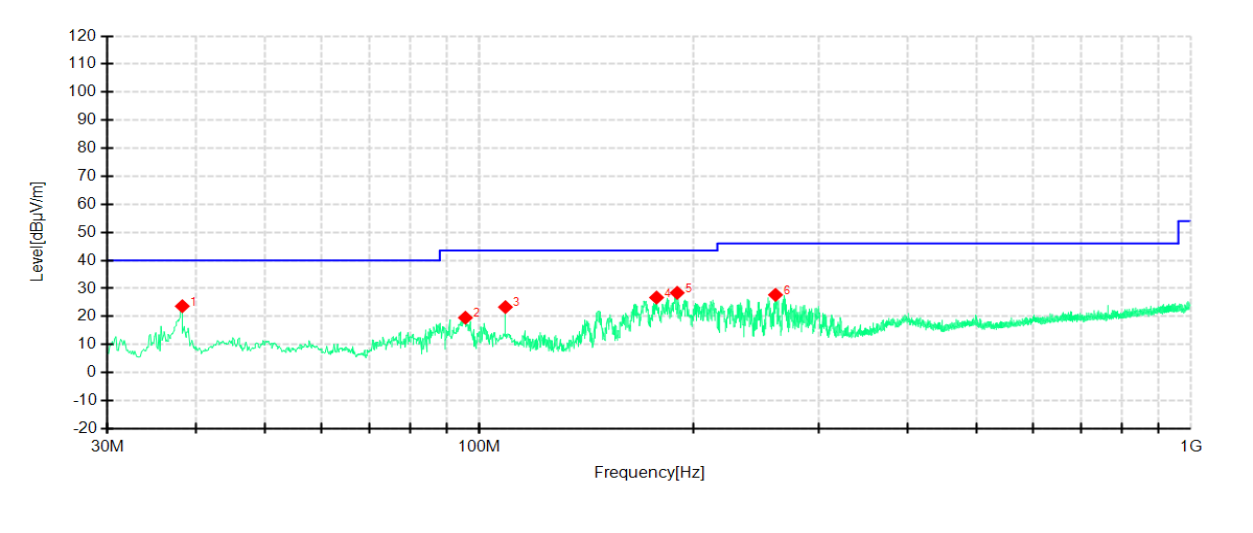

Suspected Data List										
NO.	Freq. [MHz]	Reading [dBµV/m]	Level [dBµV/m]	Factor [dB]	Limit [dBµV/m]	Margin [dB]	Trace	Height [cm]	Angle [°]	Polarity
1	38.2450	53.96	23.67	-30.2	40.00	16.33	PK	100	277	Horizontal
2	95.5963	50.27	19.56	-30.7	43.50	23.94	PK	200	125	Horizontal
3	108.8125	53.55	23.36	-30.1	43.50	20.14	PK	100	3	Horizontal
4	177.4400	58.30	26.75	-31.5	43.50	16.75	PK	200	140	Horizontal
5	189.6863	58.15	28.44	-29.7	43.50	15.06	PK	200	147	Horizontal
6	260.7388	55.21	27.73	-27.4	46.00	18.27	PK	100	176	Horizontal

Remark:

1 No emission found between lowest internal used/generated frequency to 30MHz.

2 Data of measurement within this frequency range in the table above the reading of PK detector are more 6dB than QP limit, therefore it's unnecessary to performed QP scan.

3 The IF bandwidth of Receiver between 30MHz to 1GHz was 120 kHz.

Above 1GHz:

According to C63.10, if the peak (or quasi-peak) measured value complies with the average limit, it is unnecessary to perform an average measurement, so AV emission value did not show in below table if the peak value complies with average limit.

Mode: TX

Lowest channel (2402MHz) Date: 2020/09/07

PK Final Data List									
NO.	Freq. [MHz]	PK Reading [dBμV/m]	PK Level [dBμV/m]	Factor [dB]	PK Limit [dBμV/m]	Margin [dB]	Height [cm]	Angle [°]	Polarity
1	1779.2000	44.20	47.83	3.63	74.00	26.17	200	318	Vertical
2	2919.0000	42.81	49.60	6.79	74.00	24.40	200	15	Vertical
3	4804.2722	57.30	46.69	-10.61	74.00	27.31	100	147	Vertical
4	7205.5682	50.85	48.04	-2.81	74.00	25.96	100	147	Vertical
5	9607.4643	45.39	47.87	2.48	74.00	26.13	100	159	Vertical
6	11743.5497	41.41	48.48	7.07	74.00	25.52	200	39	Vertical

AV Final Data List									
NO.	Freq. [MHz]	Factor [dB]	AV Reading [dBμV/m]	AV Value [dBμV/m]	AV Limit [dBμV/m]	AV Margin [dB]	Height [cm]	Angle [°]	Polarity
1	7205.9573	-2.81	38.73	35.92	54.00	18.08	100	175.1	Vertical

Mode: TX

Lowest channel (2402 MHz) Date: 2020/09/07

PK Final Data List									
NO.	Freq. [MHz]	PK Reading [dBμV/m]	PK Level [dBμV/m]	Factor [dB]	PK Limit [dBμV/m]	Margin [dB]	Height [cm]	Angle [°]	Polarity
1	1766.0000	45.43	48.98	3.55	74.00	25.02	100	3	Horizontal
2	2943.6000	42.53	49.38	6.85	74.00	24.62	200	3	Horizontal
3	4803.6721	62.41	51.79	-10.62	74.00	22.21	100	307	Horizontal
4	7205.5682	49.63	46.82	-2.81	74.00	27.18	100	196	Horizontal
5	9608.6643	45.90	48.38	2.48	74.00	25.62	100	246	Horizontal
6	11228.7291	41.76	48.40	6.64	74.00	25.60	200	199	Horizontal

AV Final Data List									
NO.	Freq. [MHz]	Factor [dB]	AV Reading [dBμV/m]	AV Value [dBμV/m]	AV Limit [dBμV/m]	AV Margin [dB]	Height [cm]	Angle [°]	Polarity
1	4804.0084	-10.61	56.76	46.15	54.00	7.85	118	7.7	Horizontal
2	9607.2999	2.49	32.82	35.31	54.00	18.69	118	14.6	Horizontal

Mode: TX
Middle channel (2440MHz) Date: 2020/09/07

PK Final Data List									
NO.	Freq. [MHz]	PK Reading [dBμV/m]	PK Level [dBμV/m]	Factor [dB]	PK Limit [dBμV/m]	Margin [dB]	Height [cm]	Angle [°]	Polarity
1	1677.6000	44.64	47.64	3.00	74.00	26.36	150	85	Vertical
2	1760.8000	50.26	53.78	3.52	74.00	20.22	150	156	Vertical
3	4881.0000	59.37	50.04	-9.33	74.00	23.96	150	140	Vertical
4	7320.0000	50.92	47.39	-3.53	74.00	26.61	150	132	Vertical
5	9760.5000	44.52	47.10	2.58	74.00	26.90	150	245	Vertical
6	10003.500	44.61	47.57	2.96	74.00	26.43	150	261	Vertical

AV Final Data List									
NO.	Freq. [MHz]	Factor [dB]	AV Reading [dBμV/m]	AV Value [dBμV/m]	AV Limit [dBμV/m]	AV Margin [dB]	Height [cm]	Angle [°]	Polarity
1	4880.0043	-9.34	52.45	43.11	54.00	10.89	197	206.6	Vertical

Mode: TX
Middle channel (2440MHz) Date: 2020/09/07

PK Final Data List									
NO.	Freq. [MHz]	PK Reading [dBμV/m]	PK Level [dBμV/m]	Factor [dB]	PK Limit [dBμV/m]	Margin [dB]	Height [cm]	Angle [°]	Polarity
1	2439.8000	75.45	81.79	6.34	74.00	-7.79	150	211	Horizon
2	4879.5000	62.78	53.43	-9.35	74.00	20.57	150	276	Horizon
3	7320.0000	49.16	45.63	-3.53	74.00	28.37	150	228	Horizon
4	9207.0000	44.67	46.17	1.50	74.00	27.83	150	204	Horizon
5	9937.5000	44.36	47.19	2.83	74.00	26.81	150	82	Horizon
6	14545.500	39.58	49.91	10.33	74.00	24.09	150	310	Horizon

AV Final Data List									
NO.	Freq. [MHz]	Factor [dB]	AV Reading [dBμV/m]	AV Value [dBμV/m]	AV Limit [dBμV/m]	AV Margin [dB]	Height [cm]	Angle [°]	Polarity
1	4880.0172	-9.34	60.44	51.10	54.00	2.90	162	240.9	Horizontal

Mode: TX
Highest channel (2480MHz) Date: 2020/09/07

PK Final Data List									
NO.	Freq. [MHz]	PK Reading [dBμV/m]	PK Level [dBμV/m]	Factor [dB]	PK Limit [dBμV/m]	Margin [dB]	Height [cm]	Angle [°]	Polarity
1	2400.4000	43.58	50.63	7.05	74.00	23.37	150	64	Vertical
2	4959.0000	58.44	49.64	-8.80	74.00	24.36	150	148	Vertical
3	7440.0000	50.40	47.89	-2.51	74.00	26.11	150	140	Vertical
4	9921.0000	44.04	46.85	2.81	74.00	27.15	150	157	Vertical
5	11121.0000	42.33	48.62	6.29	74.00	25.38	150	359	Vertical
6	14026.5000	38.27	48.37	10.10	74.00	25.63	150	311	Vertical

AV Final Data List									
NO.	Freq. [MHz]	Factor [dB]	AV Reading [dBμV/m]	AV Value [dBμV/m]	AV Limit [dBμV/m]	AV Margin [dB]	Height [cm]	Angle [°]	Polarity
1	4960.0116	-8.80	52.32	43.52	54.00	10.48	148	94.5	Vertical

Mode: TX
Highest channel (2480MHz) Date: 2020/09/07

Suspected Data List									
NO.	Freq. [MHz]	PK Reading [dBμV/m]	PK Level [dBμV/m]	Factor [dB]	PK Limit [dBμV/m]	Margin [dB]	Height [cm]	Angle [°]	Polarity
1	1754.8000	44.99	48.47	3.48	74.00	25.53	150	140	Horizontal
2	4960.5000	62.81	54.01	-8.80	74.00	19.99	150	294	Horizontal
3	7441.5000	47.84	45.32	-2.52	74.00	28.68	150	196	Horizontal
4	9921.0000	44.84	47.65	2.81	74.00	26.35	150	74	Horizontal
5	11931.0000	41.29	48.29	7.00	74.00	25.71	150	42	Horizontal
6	13903.5000	38.69	48.33	9.64	74.00	25.67	150	278	Horizontal

AV Final Data List									
NO.	Freq. [MHz]	Factor [dB]	AV Reading [dBμV/m]	AV Value [dBμV/m]	AV Limit [dBμV/m]	AV Margin [dB]	Height [cm]	Angle [°]	Polarity
1	4960.0040	-8.80	57.19	48.39	54.00	5.61	164	165.6	Horizontal

Remark:

1 Measuring frequencies from 1 GHz to the 10th harmonic of highest fundamental frequency.
2 Radiated emissions measured in frequency above 1000MHz were made with an instrument using peak/average detector mode.
3 Average test would be performed if the peak result were greater than the average limit or as required by the applicant.
4 Measurements above show only up to 6 maximum emissions noted, or would be lesser, with " N/A " remark, if no specific emissions from the EUT are recorded (ie: margin>20dB from the applicable limit) and considered that's already beyond the background noise floor.

7. 6dB BANDWIDTH

7.1. LIMITS

Systems using digital modulation techniques may operate in the 902–928 MHz, 2400–2483.5 MHz, and 5725–5850 MHz bands. The minimum 6 dB bandwidth shall be at least 500 kHz.

7.2. TEST PROCEDURES

1) Remove the antenna from the EUT, and then connect a low loss RF cable from antenna port to the spectrum analyzer.
2) Set resolution bandwidth (RBW) = 100kHz.Set the video bandwidth (VBW) ≥ 3 x RBW. Detector = Peak. Trace mode = max hold. Sweep = auto couple. Allow the trace to stabilize, record 6dB bandwidth value.
3) Repeat above procedures until all frequencies measured were complete.

7.3. TEST SETUP

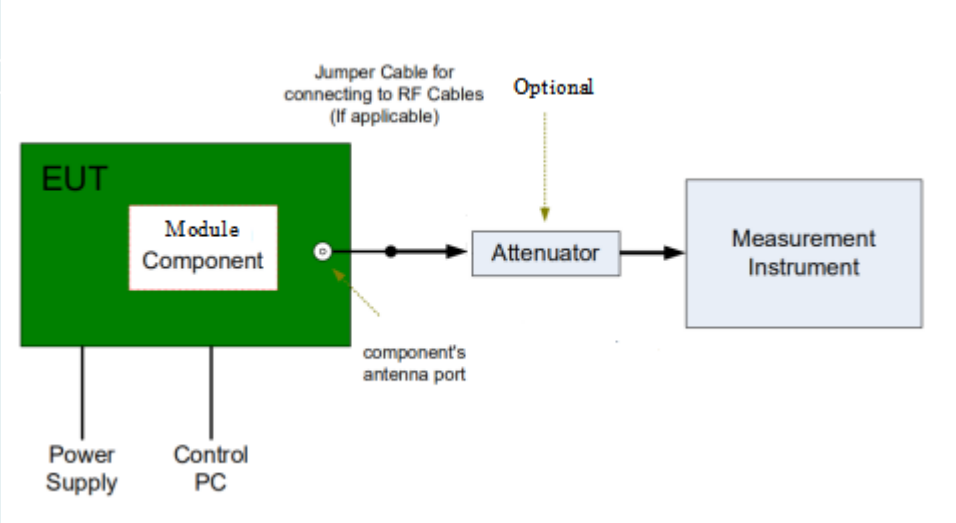

7.4. TEST RESULTS

Channel	Frequency (MHz)	Bandwidth (kHz)	Limit (kHz)	Test Result
Lowest	2402	686.3	>500	PASS
Middle	2440	703.2		PASS
Highest	2480	750.0		PASS

Lowest channel (2402MHz)

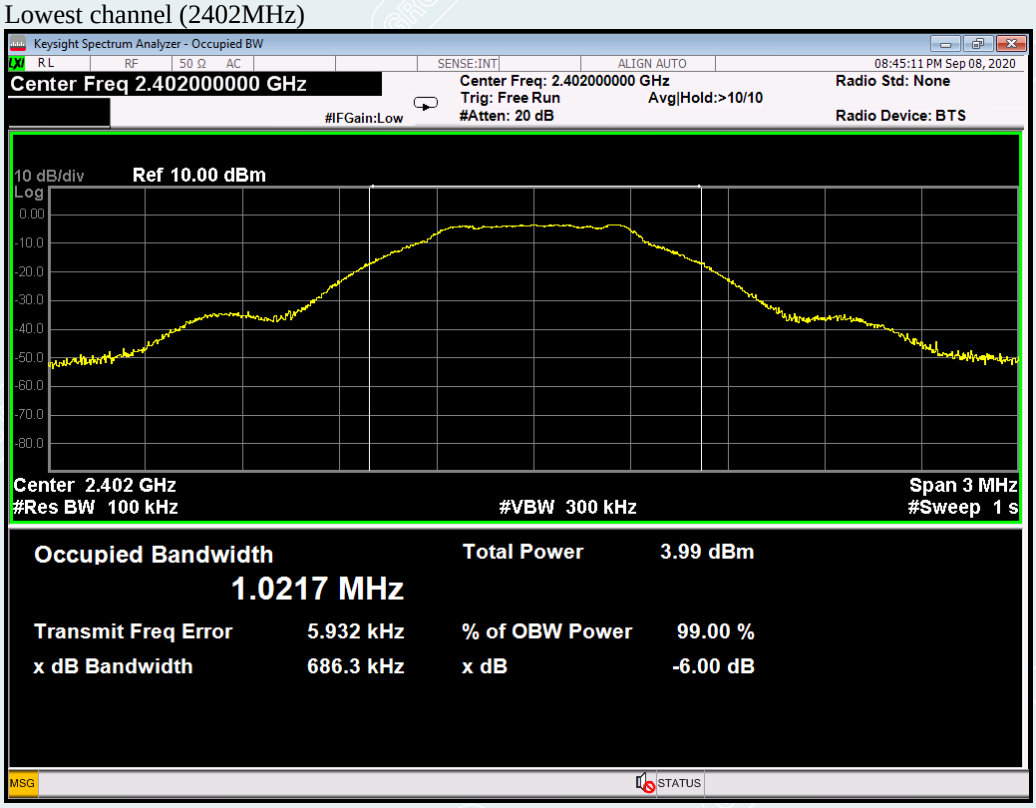

Middle channel (2440 MHz)

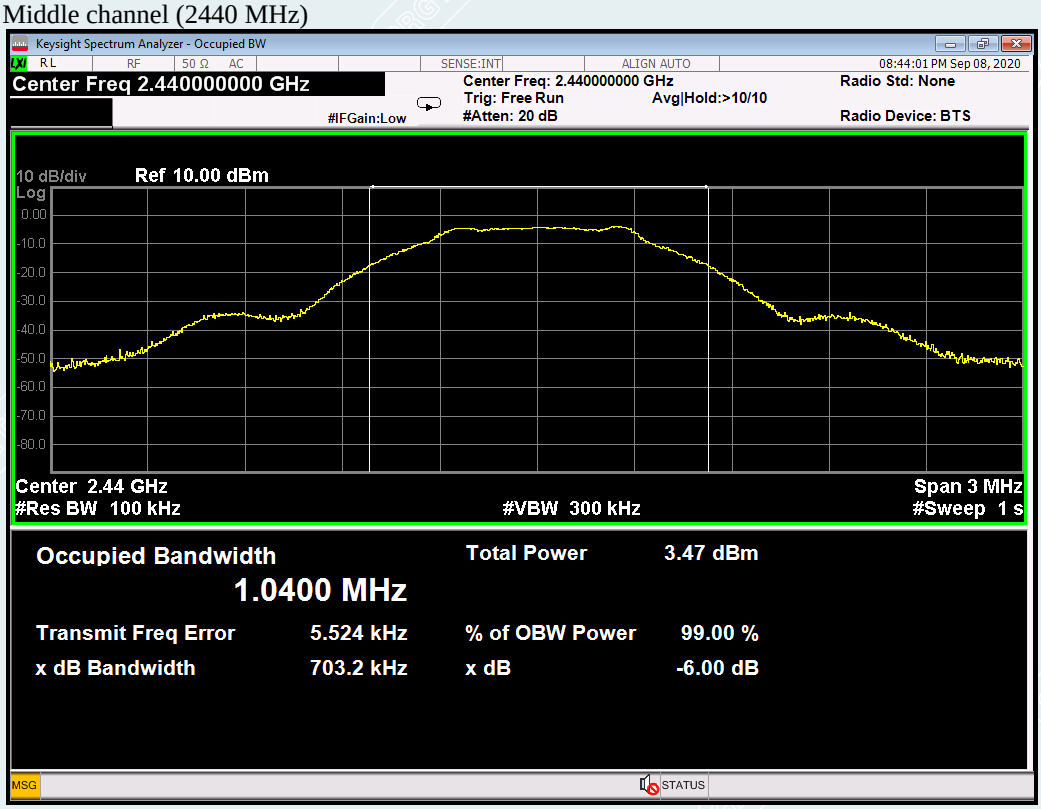

Highest channel (2480MHz)

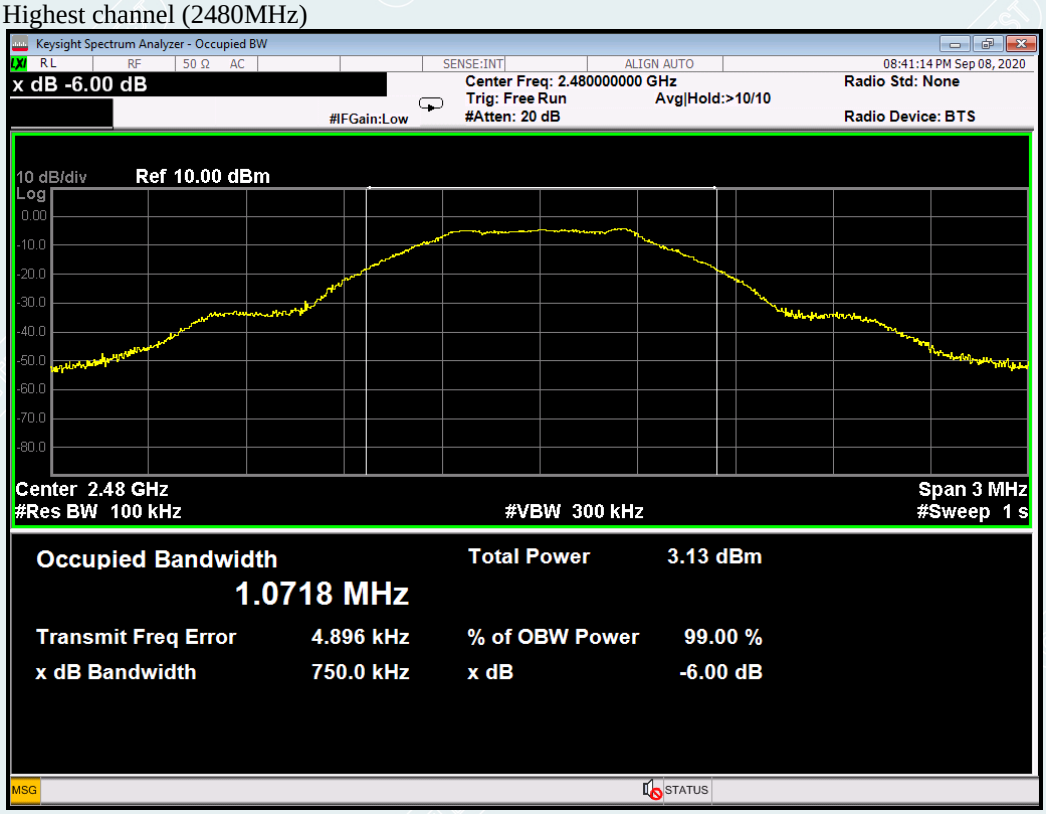

8. MAXIMUM PEAK OUTPUT POWER

8.1.LIMITS

The maximum Peak output power measurement is 1W

8.2.TEST PROCEDURES

1) Place the EUT on a bench and set it in transmitting mode.
2) Remove the antenna from the EUT and then connect a low loss RF cable from the antenna port to the power meter.

8.3.TEST SETUP

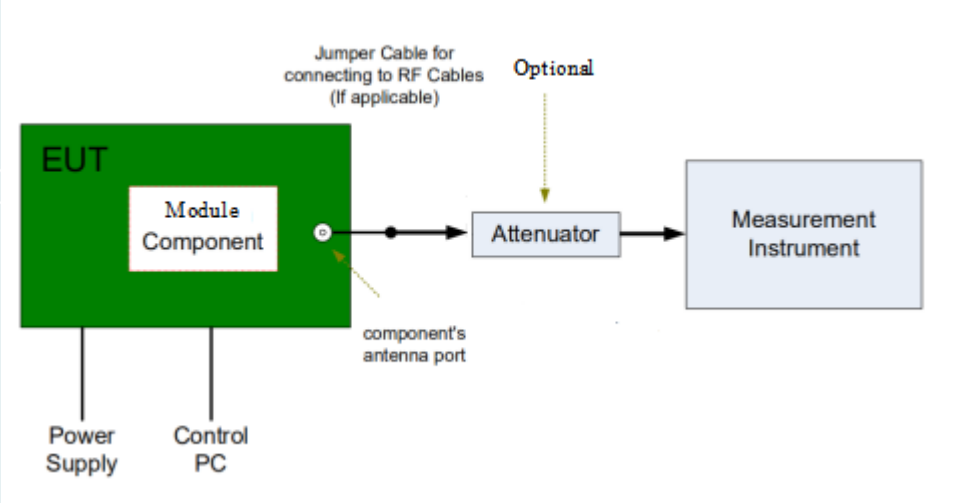

8.4.TEST RESULTS

Channel	Frequency (MHz)	Measured Channel Power (dBm)	Limit	Peak/ Average	Result
Lowest	2402	-0.46	1W (30dBm)	Peak	Pass
Middle	2440	-0.90			Pass
Highest	2480	0.70			Pass
Lowest	2402	-1.33		Average	Pass
Middle	2440	-1.93			Pass
Highest	2480	0.10			Pass

9. POWER SPECTRAL DENSITY

9.1. LIMITS

For digitally modulated systems, the power spectral density conducted from the intentional radiator to the antenna shall not be greater than 8 dBm in any 3 kHz band during any time interval of continuous transmission. This power spectral density shall be determined in accordance with the provisions of paragraph (b) of this section. The same method of determining the conducted output power shall be used to determine the power spectral density.

9.2. TEST PROCEDURES

1) Remove the antenna from the EUT, and then connect a low loss RF cable from antenna port to the spectrum analyzer.
2) Position the EUT was set without connection to measurement instrument. Turn on the EUT and connect its antenna terminal to measurement instrument via a low loss cable. Then set it to any one measured frequency within its operating range, and make sure the instrument is operated in its linear range.
3) Set the analyzer span to 1.5 times the DTS bandwidth. Set the RBW = 3 kHz. Set the VBW ≥3 RBW. Detector = peak. Ensure that the number of measurement points in the sweep ≥ 2 x span/RBW (use of a greater number of measurement points than this minimum requirement is recommended).
4) Repeat above procedures until all frequencies measured were complete.

9.3. TEST SETUP

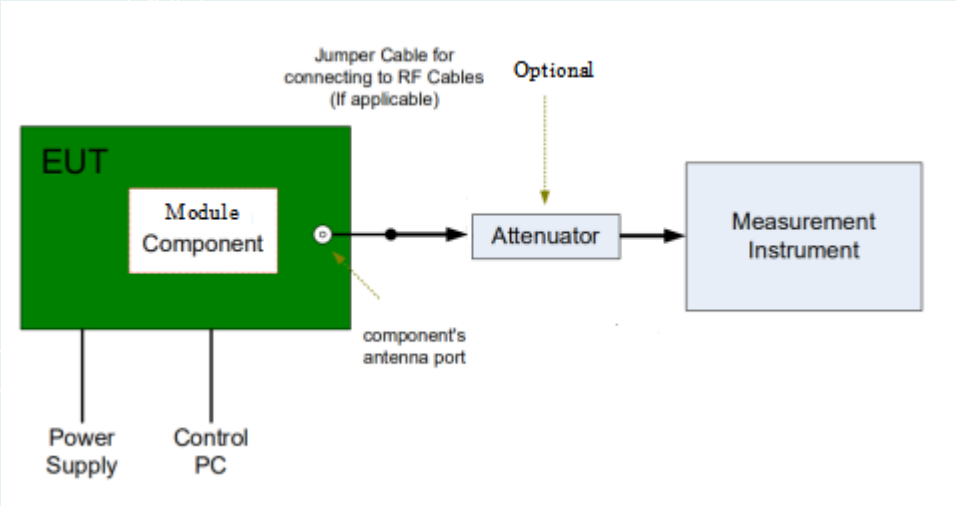

9.4. TEST RESULTS

Channel	Frequency (MHz)	PPSD (dBm)	Limit (dBm/3kHz)	Test Result
Lowest	2402	-18.021	8	PASS
Middle	2440	-19.031		PASS
Highest	2480	-17.790		PASS

Lowest channel (2402MHz)

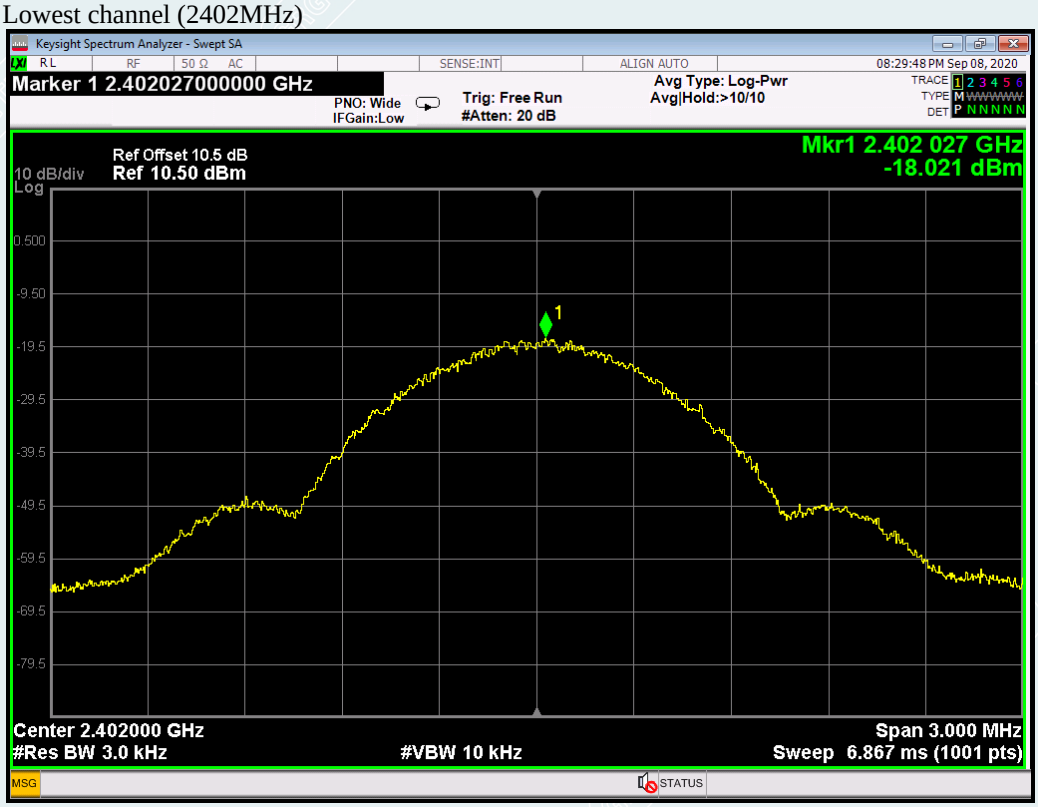

Middle channel (2440 MHz)

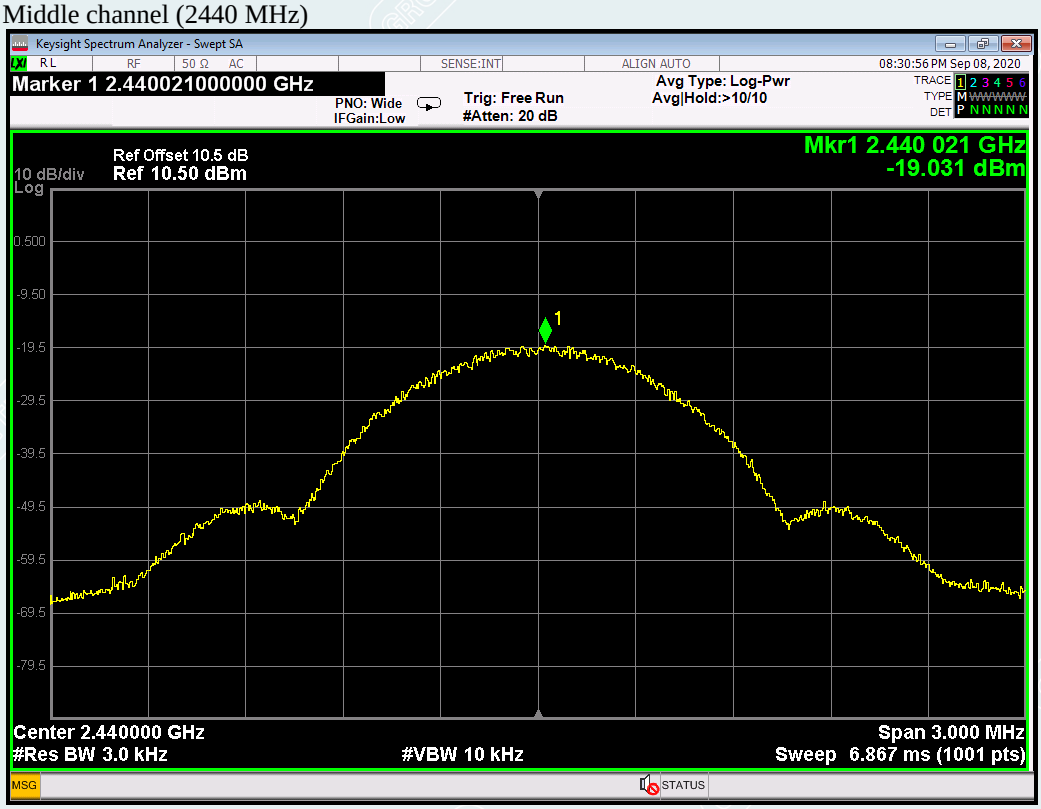

Highest channel (2480MHz)

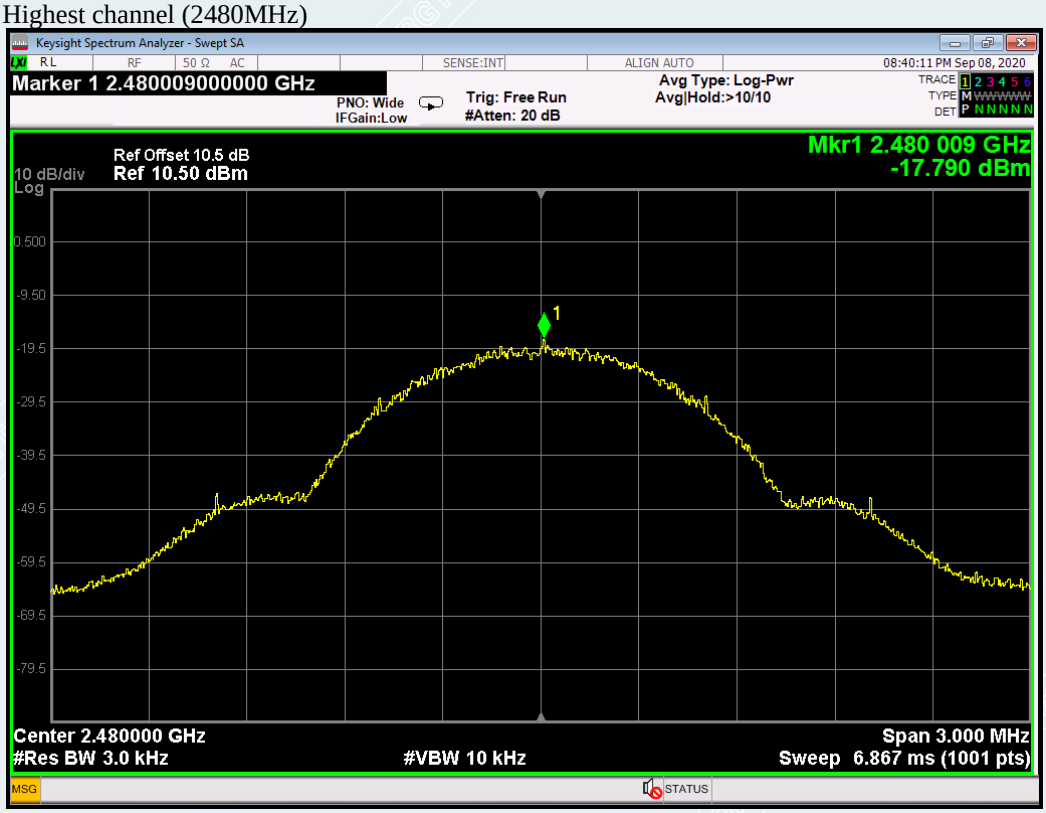

10. CONDUCTED BAND EDGES AND SPURIOUS EMISSIONS

10.1. LIMITS

(d) In any 100 kHz bandwidth outside the frequency band in which the spread spectrum or digitally modulated intentional radiator is operating, the radio frequency power that is produced by the intentional radiator shall be at least 20 dB below that in the 100 kHz bandwidth within the band that contains the highest level of the desired power, based on either an RF conducted or a radiated measurement, provided the transmitter demonstrates compliance with the peak conducted power limits. If the transmitter complies with the conducted power limits based on the use of RMS averaging over a time interval, as permitted under paragraph (b)(3) of this section, the attenuation required under this paragraph shall be 30 dB instead of 20 dB.

10.2. TEST PROCEDURES

Test procedures follow KDB 558074 D01 DTS Measurement Guidance v05r02.

Remove the antenna from the EUT and then connect a low attenuation cable from the antenna port to the spectrum.

1) Remove the antenna from the EUT and then connect a low attenuation cable from the antenna port to the spectrum.
2) Set the spectrum analyzer: RBW =100KHz; VBW =300KHz, Span = 10MHz to 26GHz; Sweep = auto; Detector Function = Peak. Trace = Max, hold.
3) Measure and record the results in the test report.
4) The RF fundamental frequency should be excluded against the limit line in the operating frequency band.

10.3. TEST SETUP

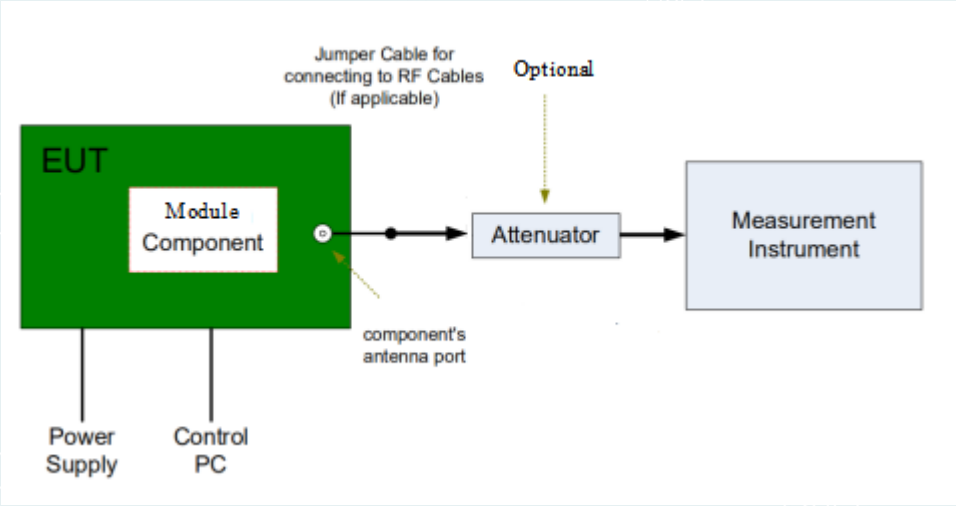

10.4. TEST RESULTS

Lowest channel (2402MHz)
0.01GHz-26.5GHz

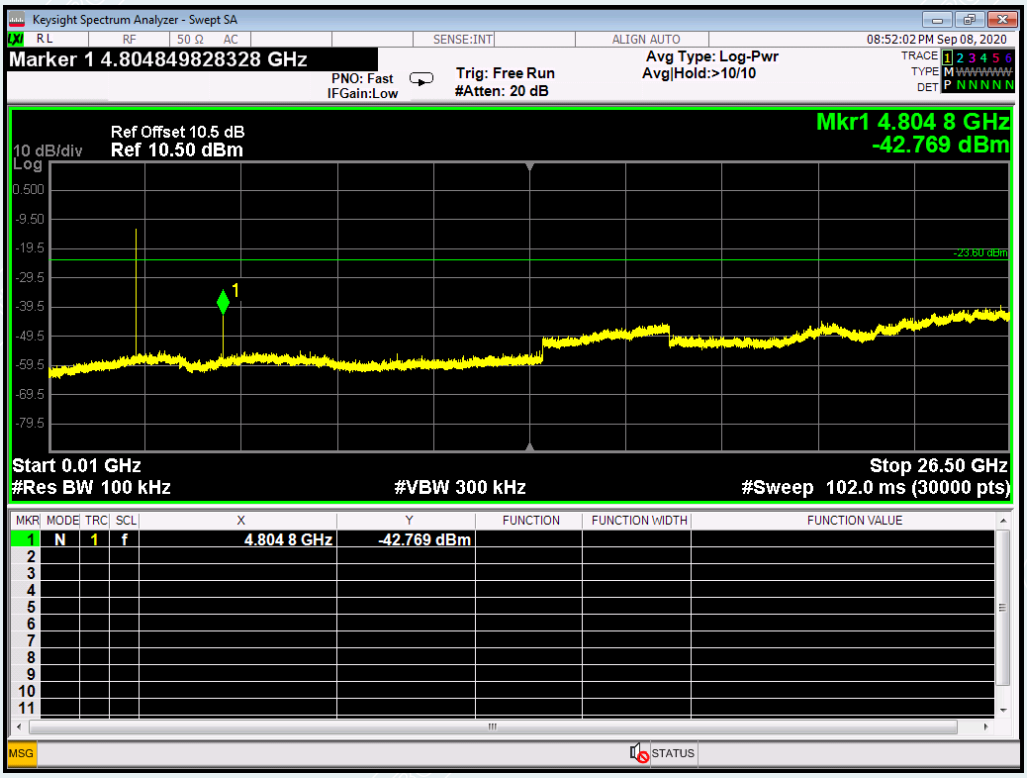

2.31GHz-2.41GHz

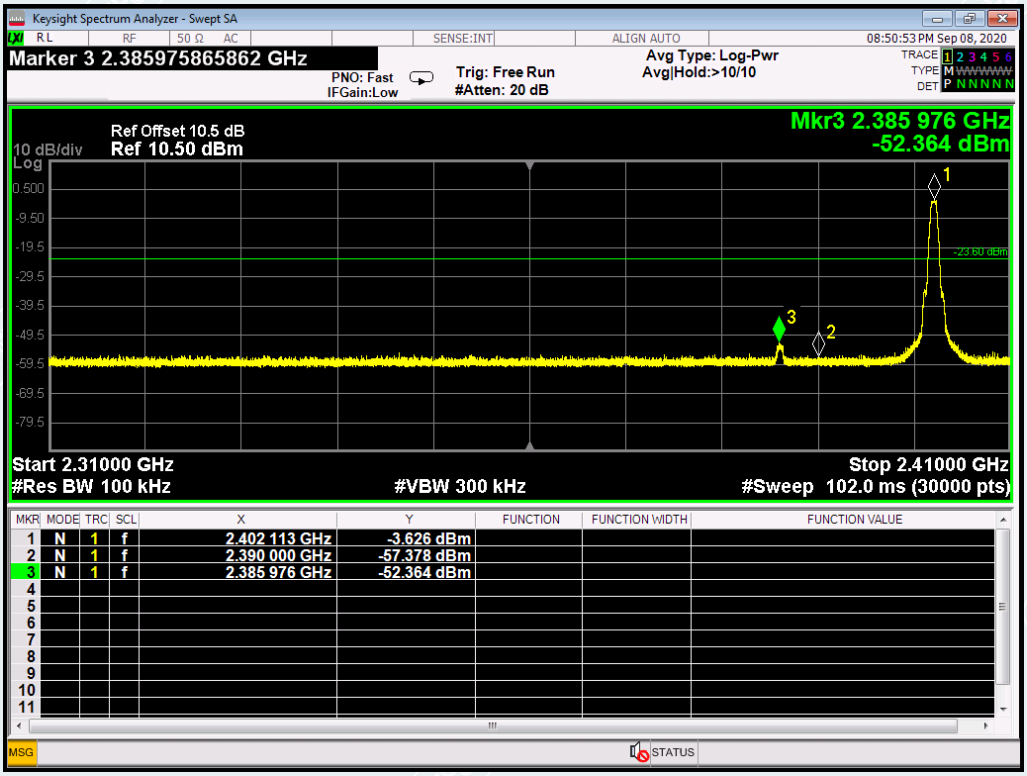

Middle channel (2440 MHz)
0.01GHz-26.5GHz

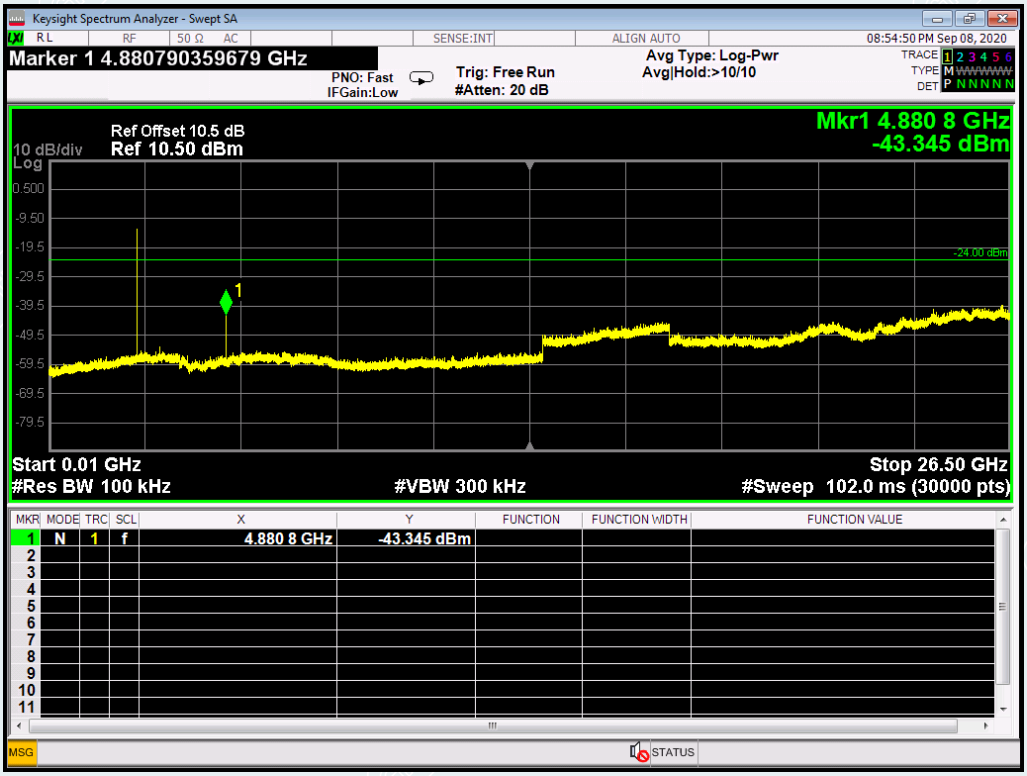

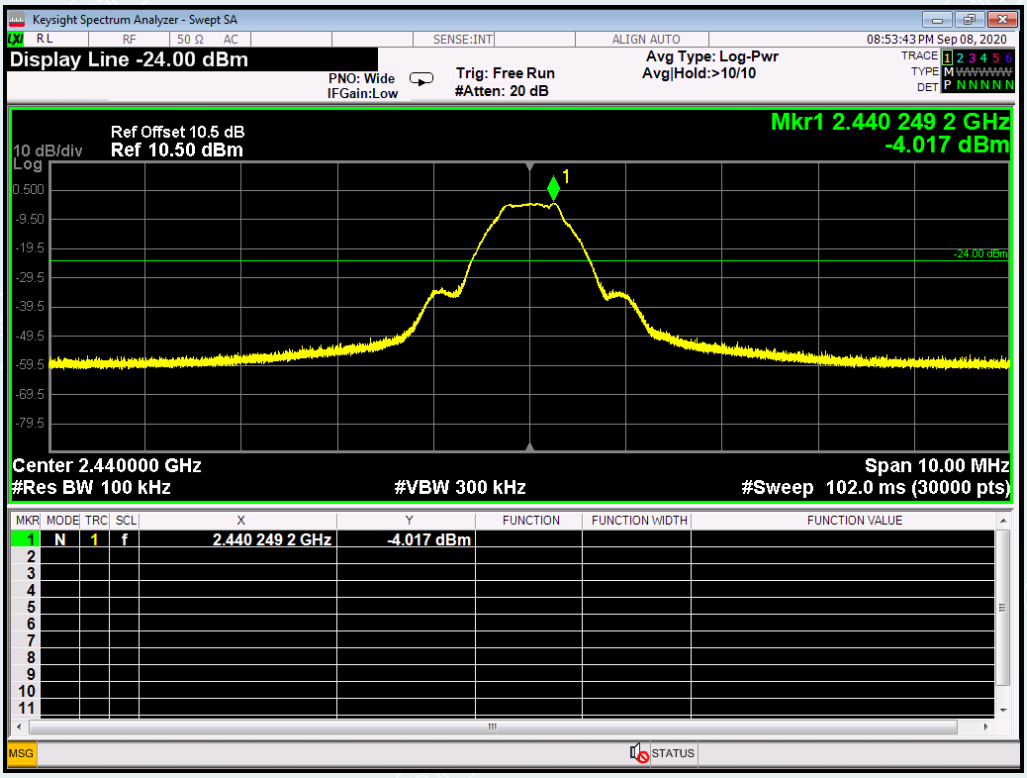

Highest channel (2480MHz)
0.01GHz-26.5GHz

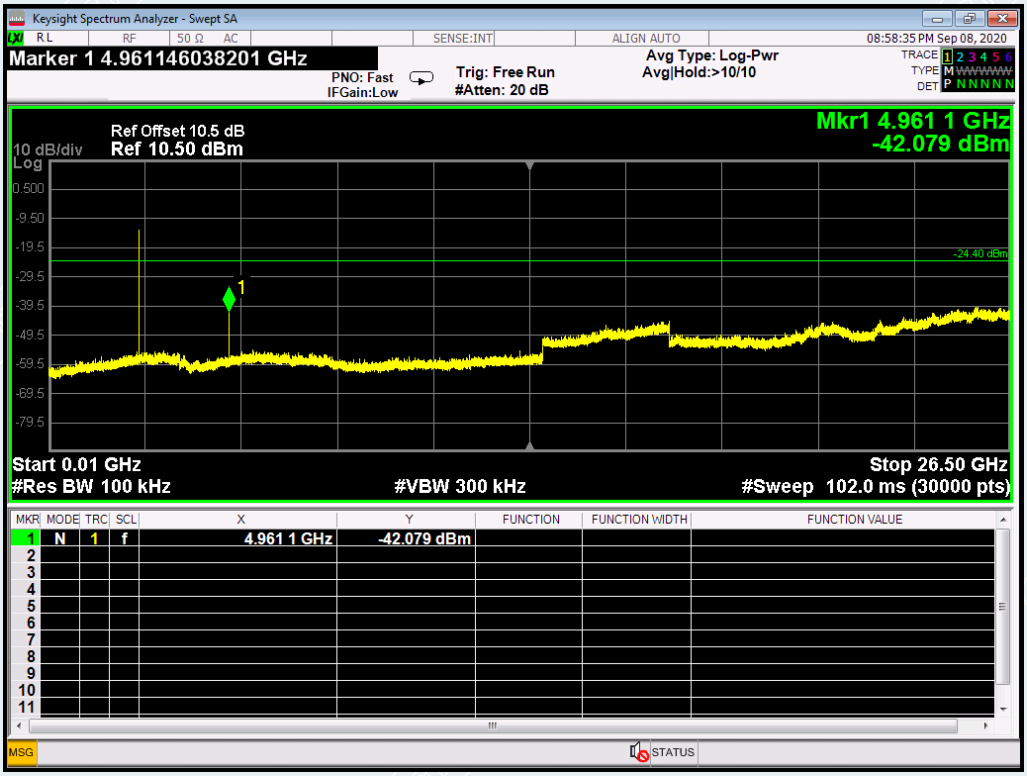

2.475GHz-2.5GHz

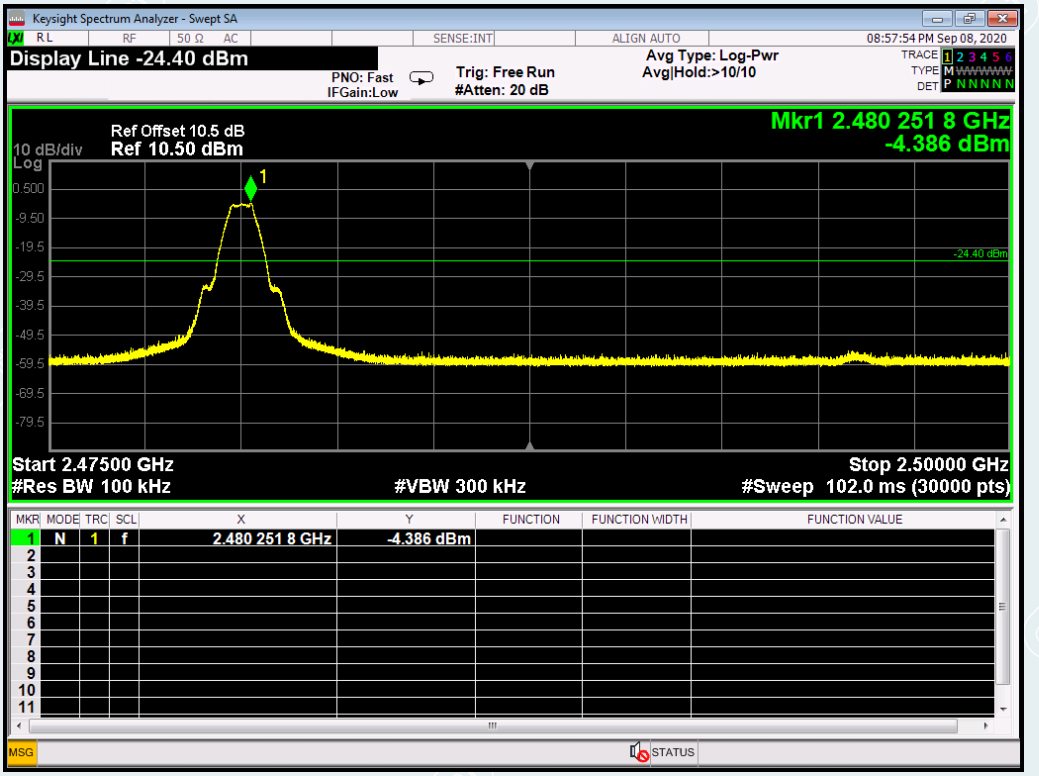

11. RESTRICTED BANDS OF OPERATION

11.1. LIMITS

Section 15.247(d) In addition, Radiated emissions which fall in the restricted bands, as defined in §15.205(a), must also comply with the radiated emission limits specified in §15.209(a) (see §15.205(c)).

MHz	MHz	MHz	GHz
0.090 - 0.110 [1]0.495 - 0.505 2.1735 - 2.1905 4.125 - 4.128 4.17725 - 4.17775 4.20725 - 4.20775 6.215 - 6.218 6.26775 - 6.26825 6.31175 - 6.31225 8.291 - 8.294 8.362 - 8.366 8.37625 - 8.38675 8.41425 - 8.41475 12.29 - 12.293 12.51975 - 12.52025 12.57675 - 12.57725 13.36 - 13.41	16.42 - 16.423 16.69475 - 16.69525 16.80425 - 16.80475 25.5 - 25.67 37.5 - 38.25 73 - 74.6 74.8 - 75.2 108 - 121.94 123 - 138 149.9 - 150.05 156.52475 - 156.52525 156.7 - 156.9 162.0125 - 167.17 167.72 - 173.2 240 - 285 322 - 335.4	399.9 - 410 608 - 614 960 - 1240 1300 - 1427 1435 - 1626.5 1645.5 - 1646.5 1660 - 1710 1718.8 - 1722.2 2200 - 2300 2310 - 2390 2483.5 - 2500 2655 - 2900 3260 - 3267 3332 - 3339 3345.8 - 3358 3600 - 4400	4.5 - 5.15 5.35 - 5.46 7.25 - 7.75 8.025 - 8.5 9.0 - 9.2 9.3 - 9.5 10.6 - 12.7 13.25 - 13.4 14.47 - 14.5 15.35 - 16.2 17.7 - 21.4 22.01 - 23.12 23.6 - 24.0 31.2 - 31.8 36.43 - 36.5

11.2. TEST PROCEDURES

Test procedures follow KDB 558074 D01 DTS Meas Guidance v03r01.

1) The EUT is placed on a turntable, which is 1.5m above the ground plane.
2) The turntable shall be rotated for 360 degrees to determine the position of maximum emission level.
3) EUT is set 3m away from the receiving antenna, which is varied from 1m to 4m to find out the highest emission.
4) Set the spectrum analyzer in the following setting in order to capture the lower and upper band-edges of the emission:
   a) PEAK: RBW=1MHz / VBW=1MHz / Sweep=AUTO
   b) AVERAGE: RBW=1MHz / VBW=1/T / Sweep=AUTO
5) Repeat the procedures until all the PEAK and AVERAGE versus POLARIZATION are measured.

11.3. TEST SETUP

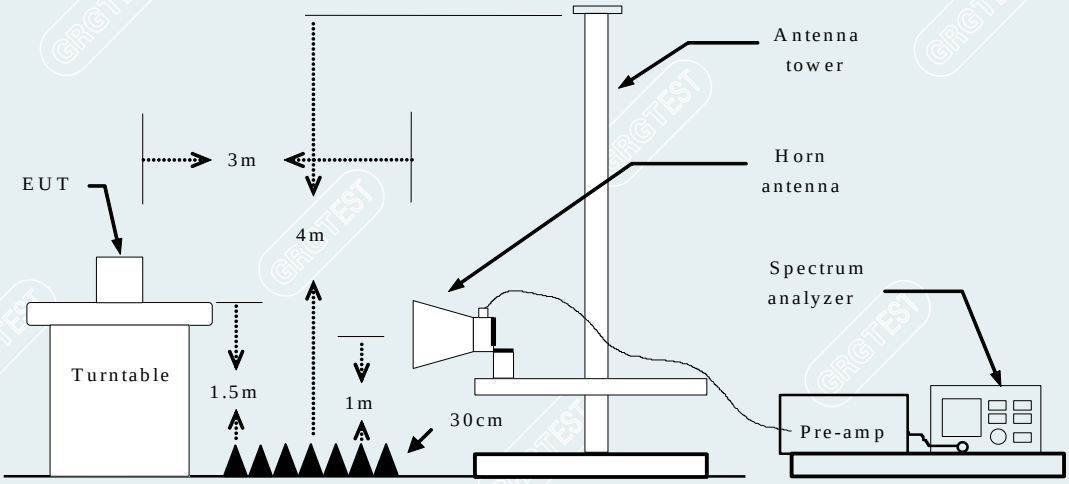

11.4. TEST RESULTS

Lowest Channel
Channel 2402MHz
Detector mode: Peak Polarity: Horizontal

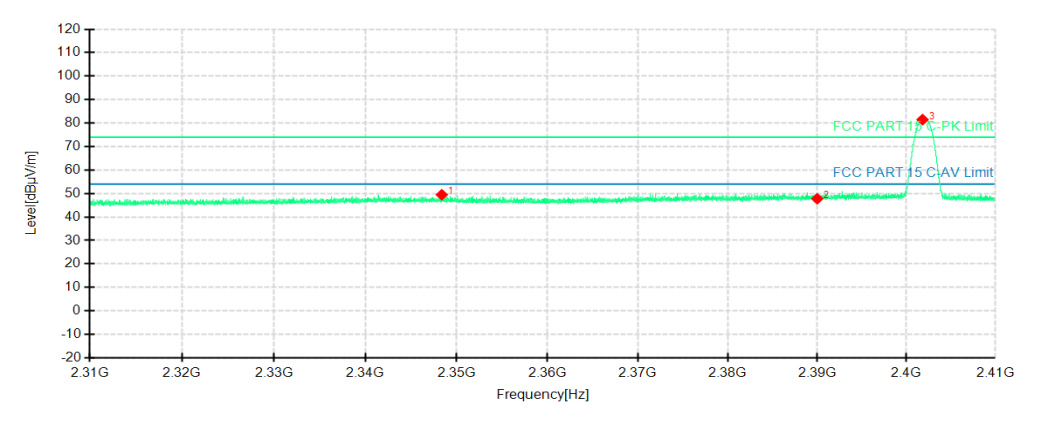

Detector mode: Peak Polarity: Vertical

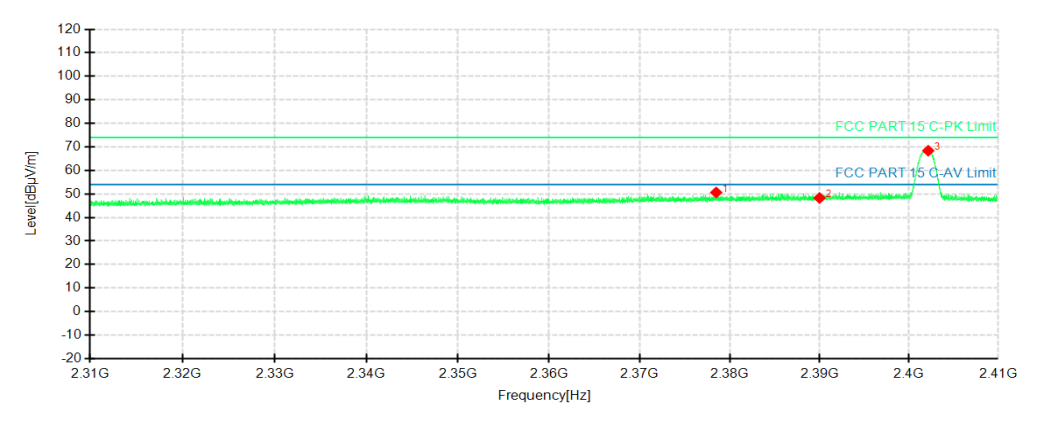

No.	Frequency MHz	Reading dBµV/m	Level dBµV/m	Factor dB	Limit dBuV/m	Margin dB	Height cm	Angle °	Pole
1	2348.3800	43.52	49.47	5.95	74.00	24.53	150	229	Horizontal
2	2390.0000	40.92	47.77	6.85	74.00	26.23	150	197	Horizontal
3	2401.8100	74.44	81.47	7.03	74.00	-7.47	150	229	Horizontal
1	2378.5000	44.03	50.63	6.60	74.00	23.37	150	2	Vertical
2	2390.0000	41.44	48.29	6.85	74.00	25.71	150	286	Vertical
3	2402.1500	61.35	68.37	7.02	74.00	5.63	150	309	Vertical

Lowest Channel
Channel 2402MHz
Detector mode: Average Polarity: Horizontal

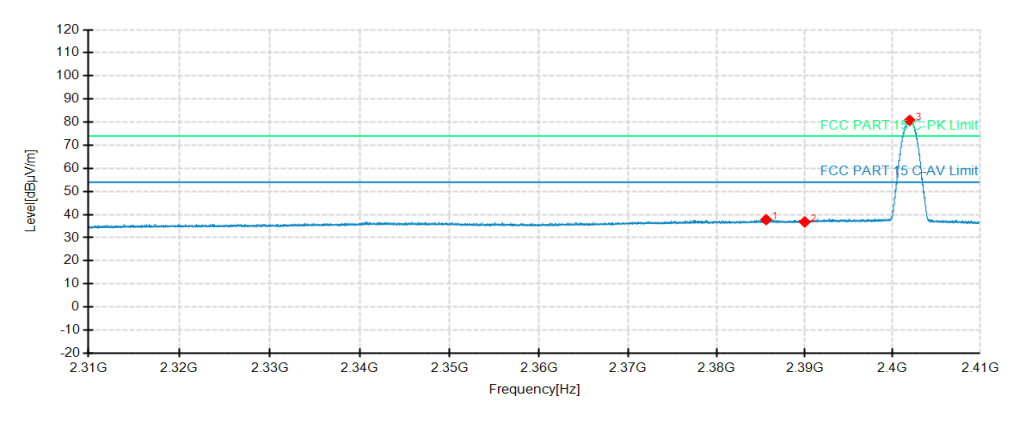

Detector mode: Average Polarity: Vertical

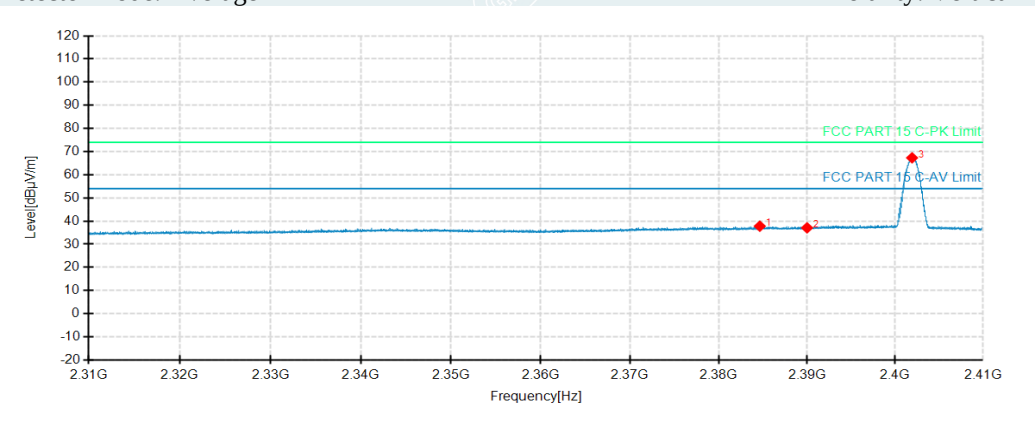

No.	Frequency MHz	Reading dBµV/m	Level dBµV/m	Factor dB	Limit dBuV/m	Margin dB	Height cm	Angle °	Pole
1	2385.6200	31.04	37.79	6.75	54.00	16.21	150	330	Horizontal
2	2390.0000	29.96	36.81	6.85	54.00	17.19	150	174	Horizontal
3	2401.9500	73.74	80.76	7.02	54.00	-26.76	150	232	Horizontal
1	2384.6500	31.06	37.79	6.73	54.00	16.21	150	129	Vertical
2	2390.0000	30.23	37.08	6.85	54.00	16.92	150	357	Vertical
3	2401.9200	60.27	67.30	7.03	54.00	-13.30	150	309	Vertical

Highest Channel

Channel 2480MHz

Detector mode: Peak Polarity: Horizontal

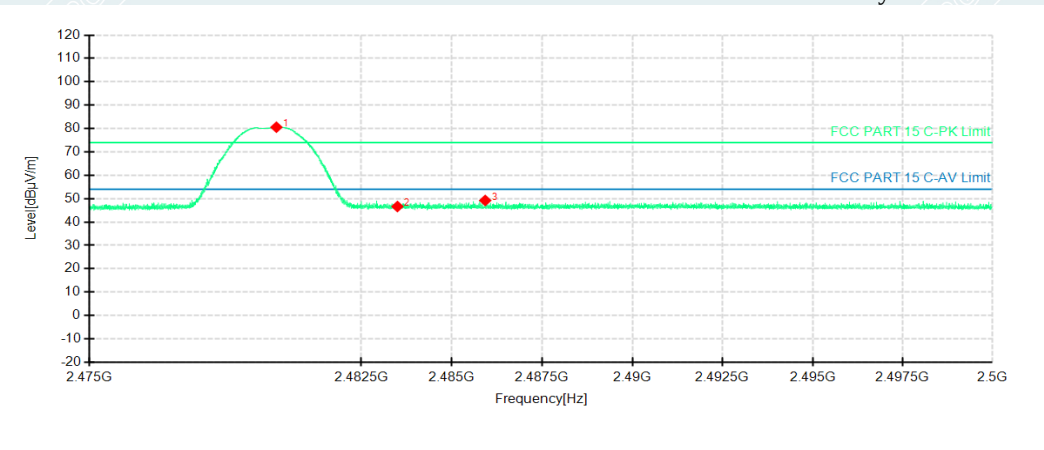

Detector mode: Peak Polarity: Vertical

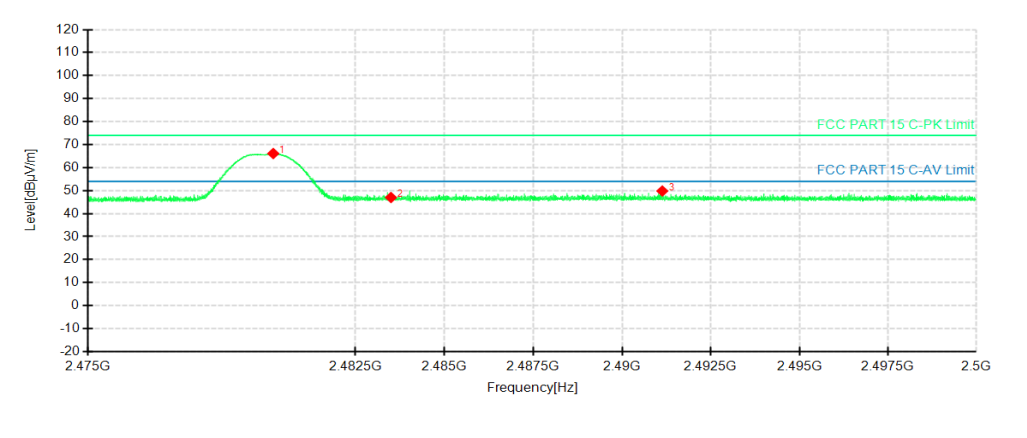

No.	Frequency MHz	Reading dBµV/m	Level dBµV/m	Factor dB	Limit dBuV/m	Margin dB	Height cm	Angle °	Pole
1	2480.1575	74.95	80.57	5.62	74.00	-6.57	150	211	Horizontal
2	2483.5000	41.07	46.63	5.56	74.00	27.37	150	179	Horizontal
3	2485.9275	43.71	49.22	5.51	74.00	24.78	150	292	Horizontal
1	2480.1950	60.50	66.12	5.62	74.00	7.88	150	84	Vertical
2	2483.5000	41.43	46.99	5.56	74.00	27.01	150	50	Vertical
3	2491.1350	44.39	49.81	5.42	74.00	24.19	150	181	Vertical

Highest Channel
Channel 2480MHz
Detector mode: Average Polarity: Horizontal

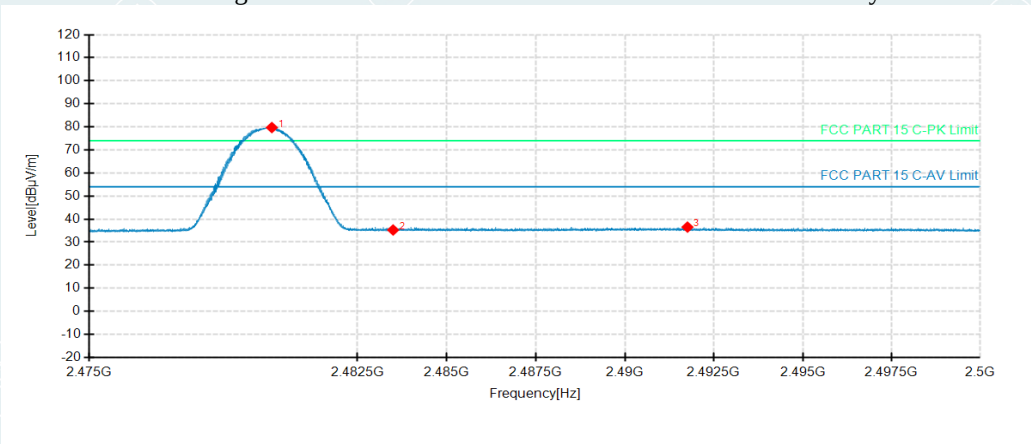

Detector mode: Average Polarity: Vertical

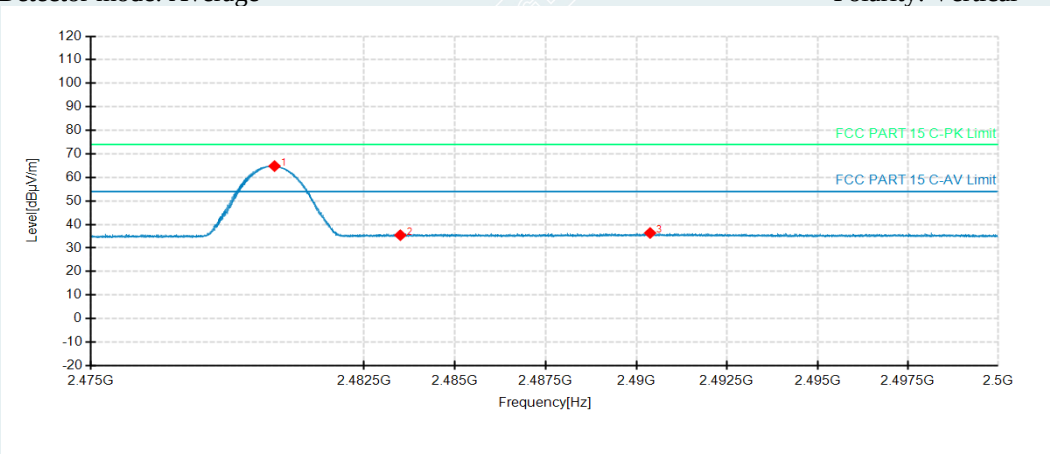

No.	Frequency MHz	Reading dBµV/m	Level dBµV/m	Factor dB	Limit dBuV/m	Margin dB	Height cm	Angle °	Pole
1	2480.1050	74.07	79.69	5.62	54.00	-25.69	150	211	Horizontal
2	2483.5000	29.70	35.26	5.56	54.00	18.74	150	301	Horizontal
3	2491.7600	31.11	36.52	5.41	54.00	17.48	150	58	Horizontal
1	2480.0425	59.19	64.81	5.62	54.00	-10.81	150	83	Vertical
2	2483.5000	29.88	35.44	5.56	54.00	18.56	150	146	Vertical
3	2490.3800	30.94	36.37	5.43	54.00	17.63	150	91	Vertical

Remark: Max field strength in 3m distance. No any other emission which falls in restricted bands can be detected and be reported.

----------This is the last page of the report. ----------