TEST REPORT

Product	:	JCV PayPad PLUS
Trade mark	:	JCV
Model/Type reference	:	G1
Serial Number	:	N/A
Report Number	:	EED32O80125304
FCC ID	:	2AW3VPAYPADPLUS001
Date of Issue	:	Mar. 08, 2022
Test Standards	:	47 CFR Part 15 Subpart E
Test result	:	PASS

Prepared for:

Japan Computer Vision Corp

2-5-1 Kojimachi, Hanzomon PREX South 6F, Chiyoda-ku, Tokyo Japan

Prepared by:

Centre Testing International Group Co., Ltd.
Hongwei Industrial Zone, Bao'an 70 District,
Shenzhen, Guangdong, China
TEL: +86-755-3368 3668
FAX: +86-755-3368 3385

Compiled by: Frazer. Li

Reviewed by: Aaron Ma

Approved by: David Wang

David Wang

Date: Mar. 08, 2022

Check No.: 5140250122

CENTRE TESTING INTERNATIONAL GROUP CO.,LTD. CTI Report Seal

1 Content

1 CONTENT 2
2 VERSION 3
3 TEST SUMMARY 4
4 GENERAL INFORMATION 5
4.1 CLIENT INFORMATION 5
4.2 GENERAL DESCRIPTION OF EUT 5
4.3 TEST CONFIGURATION 7
4.4 TEST ENVIRONMENT 7
4.5 DESCRIPTION OF SUPPORT UNITS 8
4.6 TEST LOCATION 8
4.7 DEVIATION FROM STANDARDS 8
4.8 ABNORMALITIES FROM STANDARD CONDITIONS 8
4.9 OTHER INFORMATION REQUESTED BY THE CUSTOMER 8
4.10 MEASUREMENT UNCERTAINTY (95% CONFIDENCE LEVELS, K=2) 8
5 EQUIPMENT LIST 9
6 RADIO TECHNICAL REQUIREMENTS SPECIFICATION 11
6.1 ANTENNA REQUIREMENT 11
6.2 AC POWER LINE CONDUCTED EMISSIONS 12
6.3 MAXIMUM CONDUCTED OUTPUT POWER 15
6.4 6DB EMISSON BANDWIDTH 16
6.5 26DB EMISSION BANDWIDTH AND 99% OCCUPIED BANDWIDTH 17
6.6 MAXIMUM POWER SPECTRAL DENSITY 18
6.7 FREQUENCY STABILITY 19
6.8 RADIATED EMISSION 20
6.9 RADIATED EMISSION WHICH FALL IN THE RESTRICTED BANDS 31
7 APPENDIX A 40
PHOTOGRAPHS OF TEST SETUP 41
PHOTOGRAPHS OF EUT CONSTRUCTIONAL DETAILS 44

2 Version

Version No.	Date	Description
00	Mar. 08, 2022	Original

3 Test Summary

Test Item	Test Requirement	Result
Antenna Requirement	47 CFR Part 15 Subpart C Section 15.203	PASS
AC Power Line Conducted Emission	47 CFR Part 15 Subpart E Section 15.407 (b)(6)	PASS
Duty Cycle	47 CFR Part 15 Subpart E Section 15.407	PASS
Maximum Conducted Output Power	47 CFR Part 15 Subpart E Section 15.407 (a)	PASS
26dB emission bandwidth	47 CFR Part 15 Subpart E Section 15.407 (a)	PASS
99% Occupied bandwidth	\	PASS
6dB emission bandwidth	47 CFR Part 15 Subpart E Section 15.407 (e)	PASS
Maximum Power Spectral Density	47 CFR Part 15 Subpart E Section 15.407 (a)	PASS
Frequency stability	47 CFR Part 15 Subpart E Section 15.407 (g)	PASS
Radiated Emissions	47 CFR Part 15 Subpart E Section 15.407 (b)	PASS
Radiated Emissions which fall in the restricted bands	47 CFR Part 15 Subpart E Section 15.407 (b)	PASS

Remark:
1.Company Name and Address shown on Report, the sample(s) and sample Information were provided by the applicant who should be responsible for the authenticity which CTI hasn't verified.

4 General Information

4.1 Client Information

Applicant:	Japan Computer Vision Corp
Address of Applicant:	2-5-1 Kojimachi, Hanzomon PREX South 6F, Chiyoda-ku, Tokyo Japan
Manufacturer:	Japan Computer Vision Corp
Address of Manufacturer:	2-5-1 Kojimachi, Hanzomon PREX South 6F, Chiyoda-ku, Tokyo Japan
Factory :	Japan Computer Vision Corp
Address of Factory :	2-5-1 Kojimachi, Hanzomon PREX South 6F, Chiyoda-ku, Tokyo Japan

4.2 General Description of EUT

Product Name:	JCV PayPad PLUS	
Model No.:	G1	
Trade mark:	JCV	
Product Type:	☐ Mobile ☐ Portable ☒ Fix Location	
Type of Modulation:	IEEE 802.11a: OFDM (BPSK, QPSK, 16QAM, 64QAM) IEEE 802.11n(HT20/HT40): OFDM (BPSK, QPSK, 16QAM, 64QAM) IEEE 802.11ac(VHT20/VHT40/VHT80): OFDM (BPSK, QPSK, 16QAM, 64QAM, 256QAM)	
Operating Frequency	U-NII-1: 5180-5240MHz U-NII-3: 5745-5825MHz	
Operating Temperature:	0℃ to +40℃	
Antenna Type:	Internal antenna	
Antenna Gain:	U-NII-1: 2.73dBi, U-NII-3: 2.60dBi	
Power Supply:	Switching adapter	Model：ASSA79W-120300 Input：AC 100-240V,50/60Hz,1.2A Output：DC 12.0V,3.0A,36.0W
Test Voltage:	AC 120V/60Hz	
Sample Received Date:	Jan. 27, 2022	
Sample tested Date:	Feb. 15, 2022 to Feb. 26, 2022	

Operation Frequency each of channel

802.11a/802.11n/802.11ac (20MHz) Frequency/Channel Operations:

U-NII-1		U-NII-3	
Channel	Frequency(MHz)	Channel	Frequency(MHz)
36	5180	149	5745
40	5200	153	5765
44	5220	157	5785
48	5240	161	5805
-	-	165	5825

802.11n/802.11ac (40MHz) Frequency/Channel Operations:

U-NII-1		U-NII-3	
Channel	Frequency(MHz)	Channel	Frequency(MHz)
38	5190	151	5755
46	5230	159	5795

802.11ac (80MHz) Frequency/Channel Operations:

U-NII-1		U-NII-3	
Channel	Frequency(MHz)	Channel	Frequency(MHz)
42	5210	155	5775

Note:

In section 15.31(m), regards to the operating frequency range over 10 MHz, the lowest frequency, the middle frequency, and the highest frequency of channel were selected to perform the test, and the selected channel see below:

4.3 Test Configuration

EUT Test Software Settings:		
Software:	QRCT3(manufacturer declare)	
EUT Power Grade:	Default	
Use test software to set the lowest frequency, the middle frequency and the highest frequency keep transmitting of the EUT.		
Test Mode:		
We have verified the construction and function in typical operation. All the test modes were carried out with the EUT in transmitting operation, which was shown in this test report and defined as follows:		
Per-scan all kind of data rate in lowest channel, and found the follow list which it was worst case.		
Mode	Data rate	
802.11a	6 Mbps	
802.11n(HT20)	MCS0	
802.11n(HT40)	MCS0	
802.11ac(VHT20)	MCS0	
802.11ac(VHT40)	MCS0	
802.11ac(VHT80)	MCS0	

4.4 Test Environment

Operating Environment:		
Radiated Spurious Emissions:		
Temperature:	22~25.0 °C	
Humidity:	50~55 % RH	
Atmospheric Pressure:	1010mbar	
Conducted Emissions:		
Temperature:	22~25.0 °C	
Humidity:	50~55 % RH	
Atmospheric Pressure:	1010mbar	
RF Conducted:		
Humidity:	50~55 % RH	
Atmospheric Pressure:	1010mbar	
Temperature:	NT (Normal Temperature)	22~25.0 °C
	LT (Low Temperature)	0 °C
	HT (High Temperature)	50 °C
Working Voltage of the EUT:	NV (Normal Voltage)	9.0 V
	LV (Low Voltage)	5.0 V
	HV (High Voltage)	12.0 V

4.5 Description of Support Units

The EUT has been tested with associated equipment below.

Associated equipment name		Manufacture	model	S/N serial number	Supplied by	Certification
AE	Notebook	ASUSTek	/	N/A	CTI	FCC&CE

4.6 Test Location

All tests were performed at:

Centre Testing International Group Co., Ltd
Building C, Hongwei Industrial Park Block 70, Bao'an District, Shenzhen, China
Telephone: +86 (0) 755 33683668 Fax:+86 (0) 755 33683385
No tests were sub-contracted.
FCC Designation No.: CN1164

4.7 Deviation from Standards

None.

4.8 Abnormalities from Standard Conditions

None.

4.9 Other Information Requested by the Customer

None.

4.10 Measurement Uncertainty (95% confidence levels, k=2)

No.	Item	Measurement Uncertainty
1	Radio Frequency	7.9×10^{-8}
2	RF power, conducted	0.46dB (30MHz-1GHz)
		0.55dB (1GHz-18GHz)
3	Radiated Spurious emission test	3.3dB (9kHz-30MHz)
		4.5dB (30MHz-1GHz)
		4.8dB (1GHz-18GHz)
		3.4dB (18GHz-40GHz)
4	Conduction emission	3.5dB (9kHz to 150kHz)
		3.1dB (150kHz to 30MHz)
5	Temperature test	0.64°C
6	Humidity test	3.8%
7	DC power voltages	0.026%

5 Equipment List

Conducted disturbance Test					
Equipment	**Manufacturer**	**Model No.**	**Serial Number**	**Cal. date (mm-dd-yyyy)**	**Cal. Due date (mm-dd-yyyy)**
Receiver	R&S	ESCI	100435	04/15/2021	04/14/2022
LISN	R&S	ENV216	100098	03/04/2021	03/03/2022
ISN	TESEQ GmbH	ISN T800	30297	01/04/2022	01/03/2023
ISN	R&S	NTFM 8158	NTFM 8158 #91	08/26/2021	08/25/2022

RF test system					
Equipment	**Manufacturer**	**Mode No.**	**Serial Number**	**Cal. Date (mm-dd-yyyy)**	**Cal. Due date (mm-dd-yyyy)**
Spectrum Analyzer	Keysight	N9010A	MY54510339	12-24-2021	12-23-2022
Signal Generator	Keysight	N5182B	MY53051549	12-24-2021	12-23-2022
Signal Generator	Keysight	E8257D	MY53401106	12-24-2021	12-23-2022
DC Power	Keysight	E3642A	MY56376072	12-24-2021	12-23-2022
Power unit	R&S	OSP120	101374	12-24-2021	12-23-2022
RF control unit	JS Tonscend	JS0806-2	158060006	12-24-2021	12-23-2022
Communication test set	R&S	CMW500	120765	12-21-2021	12-22-2022
high-low temperature test chamber	Dong Guang Qin Zhuo	LK-80GA	QZ20150611879	12-24-2021	12-23-2022
Temperature/ Humidity Indicator	biaozhi	HM10	1804186	06-24-2021	06-23-2022
BT&WI-FI Automatic test software	JS Tonscend	JS1120-3	2.6.77.0518	---	---

3M Semi/full-anechoic Chamber					
Equipment	**Manufacturer**	**Model No.**	**Serial Number**	**Cal. Date (mm-dd-yyyy)**	**Cal. Due date (mm-dd-yyyy)**
3M Chamber & Accessory Equipment	TDK	SAC-3	---	05-24-2019	05-23-2022
TRILOG Broadband Antenna	Schwarzbeck	VULB9163	9163-618	05-16-2021	05-15-2022
Loop Antenna	Schwarzbeck	FMZB 1519B	1519B-076	04-15-2021	04-14-2024
Receiver	R&S	ESCI7	100938-003	10-14-2021	10-13-2022
Temperature/ Humidity Indicator	Shanghai qixiang	HM10	1804298	06-24-2021	06-23-2022
Cable line	Fulai(7M)	SF106	5219/6A	---	---
Cable line	Fulai(6M)	SF106	5220/6A	---	---
Cable line	Fulai(3M)	SF106	5216/6A	---	---

Cable line	Fulai(3M)	SF106	5217/6A	---	---

3M full-anechoic Chamber					
Equipment	**Manufacturer**	**Model No.**	**Serial Number**	**Cal. Date (mm-dd-yyyy)**	**Cal. Due date (mm-dd-yyyy)**
RSE Automatic test software	JS Tonscend	JS36-RSE	10166	---	---
Receiver	Keysight	N9038A	MY57290136	03-04-2021	03-03-2022
Spectrum Analyzer	Keysight	N9020B	MY57111112	03-04-2021	03-03-2022
Spectrum Analyzer	Keysight	N9030B	MY57140871	03-04-2021	03-03-2022
TRILOG Broadband Antenna	Schwarzbeck	VULB 9163	9163-1148	04-28-2021	04-27-2024
Horn Antenna	Schwarzbeck	BBHA 9170	9170-832	04-15-2021	04-14-2024
Horn Antenna	ETS-LINDGREN	3117	57407	07-04-2021	07-03-2024
Preamplifier	EMCI	EMC184055SE	980597	05-20-2021	05-19-2022
Preamplifier	EMCI	EMC001330	980563	04-15-2021	04-14-2022
Preamplifier	JS Tonscend	980380	EMC051845SE	12-24-2021	12-23-2022
Communication test set	R&S	CMW500	102898	12-24-2021	12-23-2022
Temperature/ Humidity Indicator	biaozhi	GM1360	EE1186631	04-17-2021	04-16-2022
Fully Anechoic Chamber	TDK	FAC-3	---	01-09-2021	01-08-2024
Cable line	Times	SFT205-NMSM-2.50M	394812-0001	---	---
Cable line	Times	SFT205-NMSM-2.50M	394812-0002	---	---
Cable line	Times	SFT205-NMSM-2.50M	394812-0003	---	---
Cable line	Times	SFT205-NMSM-2.50M	393495-0001	---	---
Cable line	Times	EMC104-NMNM-1000	SN160710	---	---
Cable line	Times	SFT205-NMSM-3.00M	394813-0001	---	---
Cable line	Times	SFT205-NMNM-1.50M	381964-0001	---	---
Cable line	Times	SFT205-NMSM-7.00M	394815-0001	---	---
Cable line	Times	HF160-KMKM-3.00M	393493-0001	---	---

6 Radio Technical Requirements Specification

6.1 Antenna Requirement

Standard requirement:	47 CFR Part 15C Section 15.203
15.203 requirement: An intentional radiator shall be designed to ensure that no antenna other than that furnished by the responsible party shall be used with the device. The use of a permanently attached antenna or of an antenna that uses a unique coupling to the intentional radiator, the manufacturer may design the unit so that a broken antenna can be replaced by the user, but the use of a standard antenna jack or electrical connector is prohibited.	
EUT Antenna:	Please see Internal photos
The antenna is Internal antenna. The best case gain of the antenna are U-NII-1: 2.73dBi and U-NII-3 2.60dBi.	

6.2 AC Power Line Conducted Emissions

Test Requirement:	47 CFR Part 15C Section 15.207
Test Method:	ANSI C63.10: 2013
Test Frequency Range:	150kHz to 30MHz
Receiver setup:	RBW=9 kHz, VBW=30 kHz, Sweep time=auto
Limit:	

Frequency range (MHz)	Limit (dBuV)	
	Quasi-peak	Average
0.15-0.5	66 to 56*	56 to 46*
0.5-5	56	46
5-30	60	50

* Decreases with the logarithm of the frequency.

Test Setup:

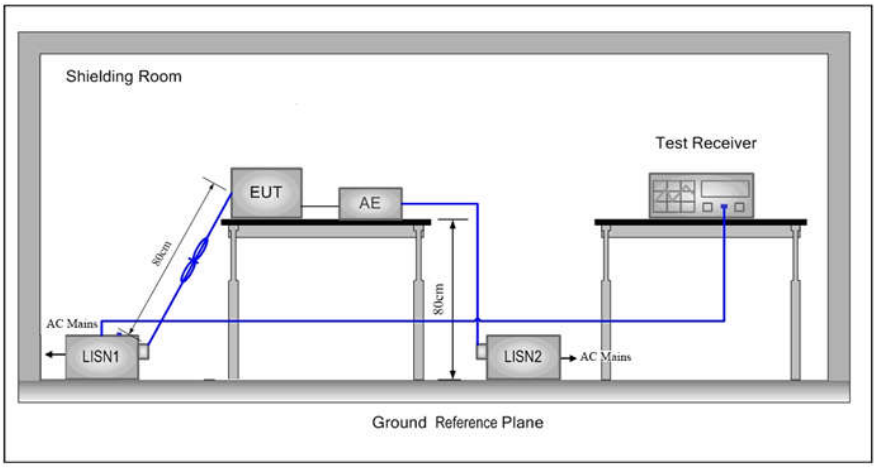

Test Procedure:

1) The mains terminal disturbance voltage test was conducted in a shielded room.
2) The EUT was connected to AC power source through a LISN 1 (Line Impedance Stabilization Network) which provides a 50Ω/50μH + 5Ω linear impedance. The power cables of all other units of the EUT were connected to a second LISN 2, which was bonded to the ground reference plane in the same way as the LISN 1 for the unit being measured. A multiple socket outlet strip was used to connect multiple power cables to a single LISN provided the rating of the LISN was not exceeded.
3) The tabletop EUT was placed upon a non-metallic table 0.8m above the ground reference plane. And for floor-standing arrangement, the EUT was placed on the horizontal ground reference plane.
4) The test was performed with a vertical ground reference plane. The rear of the EUT shall be 0.4 m from the vertical ground reference plane. The vertical ground reference plane was bonded to the horizontal ground reference plane. The LISN 1 was placed 0.8 m from the boundary of the unit under test and bonded to a ground reference plane for LISNs mounted on top of the ground reference plane. This distance was between the closest points of the LISN 1 and the EUT. All other units of the EUT and associated equipment was at least 0.8 m from the LISN 2.
5) In order to find the maximum emission, the relative positions of equipment and all of the interface cables must be changed according to ANSI C63.10: 2013 on conducted measurement.

Test Mode:	All modes were tested, only the worst case was recorded in the report.
Test Voltage:	AC 120V/60Hz
Test Results:	Pass

Measurement Data

Live line:

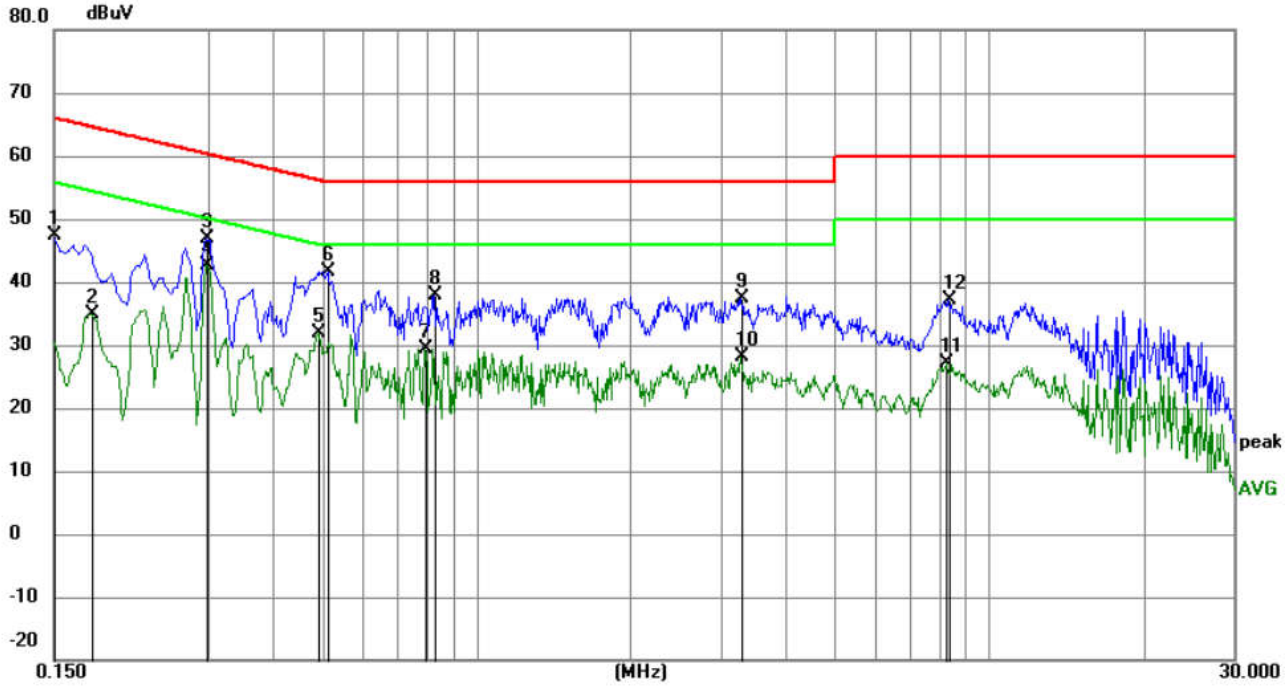

No.	Mk.	Freq.	Reading Level	Correct Factor	Measure-ment	Limit	Margin		
		MHz	dBuV	dB	dBuV	dBuV	dB	Detector	Comment
1		0.1500	37.44	9.87	47.31	66.00	-18.69	QP	
2		0.1770	25.07	9.87	34.94	54.63	-19.69	AVG	
3		0.2985	36.78	10.07	46.85	60.28	-13.43	QP	
4	*	0.2985	32.49	10.07	42.56	50.28	-7.72	AVG	
5		0.4920	21.97	9.95	31.92	46.13	-14.21	AVG	
6		0.5144	31.78	9.97	41.75	56.00	-14.25	QP	
7		0.7935	19.56	9.85	29.41	46.00	-16.59	AVG	
8		0.8295	27.92	9.85	37.77	56.00	-18.23	QP	
9		3.2820	27.52	9.79	37.31	56.00	-18.69	QP	
10		3.2820	18.33	9.79	28.12	46.00	-17.88	AVG	
11		8.2365	17.26	9.79	27.05	50.00	-22.95	AVG	
12		8.3670	27.26	9.79	37.05	60.00	-22.95	QP	

Remark:

1. The following Quasi-Peak and Average measurements were performed on the EUT:
2. Final Test Level =Receiver Reading + LISN Factor + Cable Loss.
3. If the Peak value under Average limit, the Average value is not recorded in the report.

Neutral line:

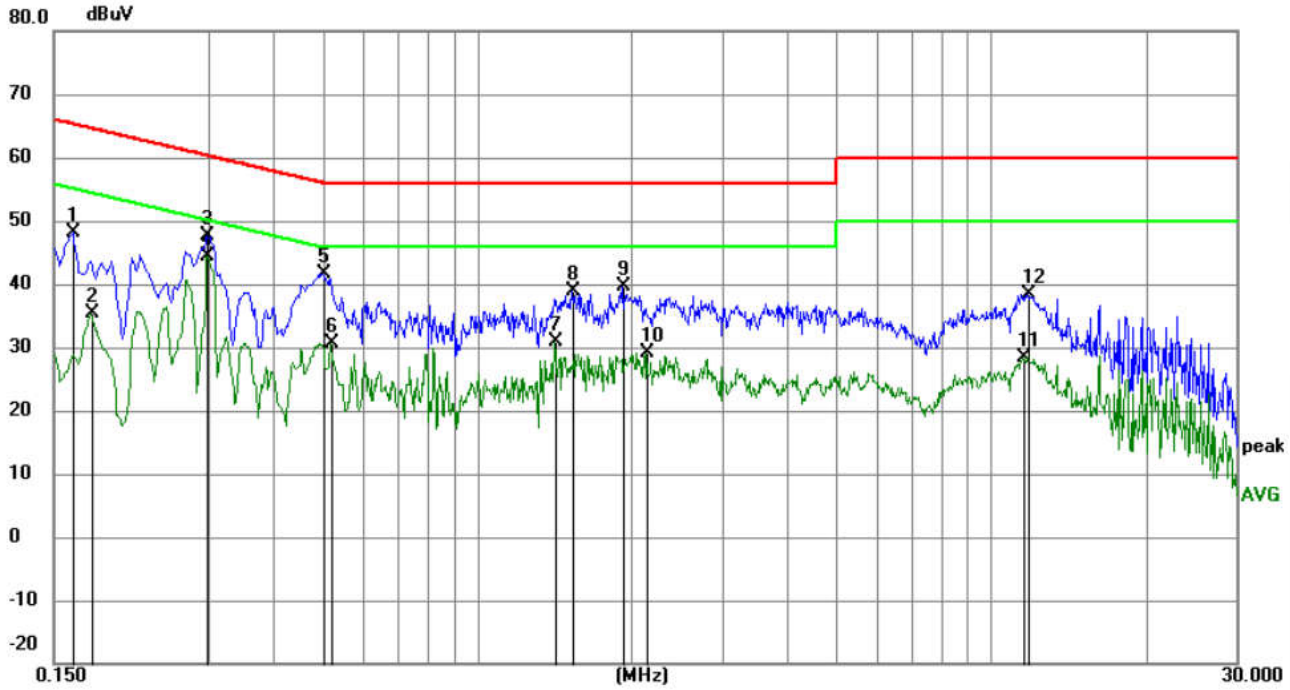

No.	Mk.	Freq.	Reading Level	Correct Factor	Measure-ment	Limit	Margin		
		MHz	dBuV	dB	dBuV	dBuV	dB	Detector	Comment
1		0.1635	38.37	9.87	48.24	65.28	-17.04	QP	
2		0.1770	25.47	9.87	35.34	54.63	-19.29	AVG	
3		0.2985	37.50	10.07	47.57	60.28	-12.71	QP	
4	*	0.2985	34.33	10.07	44.40	50.28	-5.88	AVG	
5		0.5010	31.62	9.95	41.57	56.00	-14.43	QP	
6		0.5190	20.77	9.97	30.74	46.00	-15.26	AVG	
7		1.4144	20.97	9.81	30.78	46.00	-15.22	AVG	
8		1.5315	29.06	9.81	38.87	56.00	-17.13	QP	
9		1.9275	29.85	9.79	39.64	56.00	-16.36	QP	
10		2.1435	19.41	9.79	29.20	46.00	-16.80	AVG	
11		11.5170	18.57	9.83	28.40	50.00	-21.60	AVG	
12		11.8050	28.58	9.83	38.41	60.00	-21.59	QP	

Remark:

1. The following Quasi-Peak and Average measurements were performed on the EUT:
2. Final Test Level =Receiver Reading + LISN Factor + Cable Loss.
3. If the Peak value under Average limit, the Average value is not recorded in the report.

6.3 Maximum Conducted Output Power

Test Requirement:	47 CFR Part 15C Section 15.407 (a)
Test Method:	KDB789033 D02 General UNII Test Procedures New Rules v02r01 Section E
Test Setup:	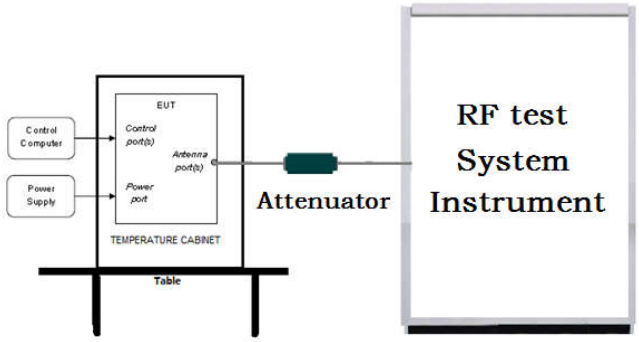
Test Procedure:	1. The testing follows the Measurement Procedure of KDB789033 D02 General UNII Test Procedures New Rules v02r01 Section E, 3, a 2. The RF output of EUT was connected to the power meter by RF cable and attenuator. The path loss was compensated to the results for each measurement. 3. Set to the maximum power setting and enable the EUT transmit continuously. 4. Measure the conducted output power and record the results in the test report.
Limit:	

Frequency band (MHz)	Limit
5150-5250	≤1W(30dBm) for master device
	≤250mW(24dBm) for client device
5250-5350	≤250mW(24dBm) for client device or 11dBm+10logB*
5470-5725	≤250mW(24dBm) for client device or 11dBm+10logB*
5725-5850	≤1W(30dBm)
Remark:	* Where B is the 26dB emission bandwidth in MHz The maximum conducted output power must be measured over any interval of continuous transmission using instrumentation calibrated in terms of an rms-equivalent voltage.

Test Mode:	Transmitting mode with modulation
Test Results:	Refer to Appendix A

6.4 6dB Emisson Bandwidth

Test Requirement:	47 CFR Part 15C Section 15.407 (e)
Test Method:	KDB789033 D02 General UNII Test Procedures New Rules v02r01 Section C
Test Setup:	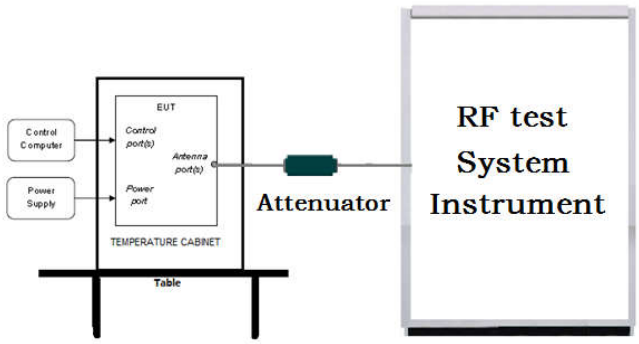 Remark: Offset=Cable loss+ attenuation factor.
Test Procedure:	1. KDB789033 D02 General UNII Test Procedures New Rules v02r01 Section C 2. Set to the maximum power setting and enable the EUT transmit continuously. 3. Make the measurement with the spectrum analyzer's resolution bandwidth (RBW) = 100 kHz. Set the Video bandwidth (VBW) = 300 kHz. In order to make an accurate measurement. The 6dB bandwidth must be greater than 500 kHz. 4. Measure and record the results in the test report.
Limit:	≥ 500 kHz
Test Mode:	Transmitting mode with modulation
Test Results:	Refer to Appendix A

6.5 26dB Emission Bandwidth and 99% Occupied Bandwidth

Test Requirement:	47 CFR Part 15C Section 15.407 (a)
Test Method:	KDB789033 D02 General UNII Test Procedures New Rules v02r01 Section D
Test Setup:	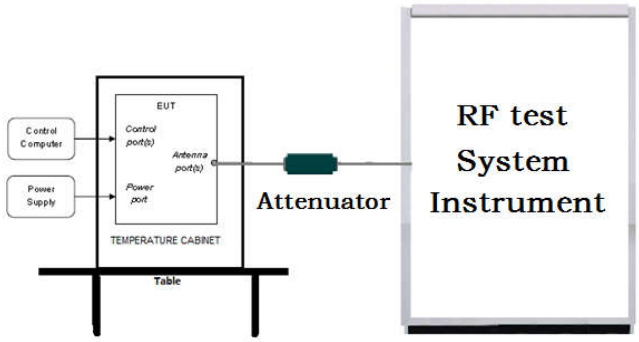 Remark: Offset=Cable loss+ attenuation factor.
Test Procedure:	1. KDB789033 D02 General UNII Test Procedures New Rules v02r01 Section D 2. Set to the maximum power setting and enable the EUT transmit continuously. 3. Make the measurement with the spectrum analyzer's resolution bandwidth (RBW) = 100 kHz. Set the Video bandwidth (VBW) = 300 kHz. In order to make an accurate measurement. 4. Measure and record the results in the test report.
Limit:	No restriction limits
Test Mode:	Transmitting mode with modulation
Test Results:	Refer to Appendix A

6.6 Maximum Power Spectral Density

Test Requirement:	47 CFR Part 15C Section 15.407 (a)
Test Method:	KDB789033 D02 General UNII Test Procedures New Rules v02r01 Section F
Test Setup:	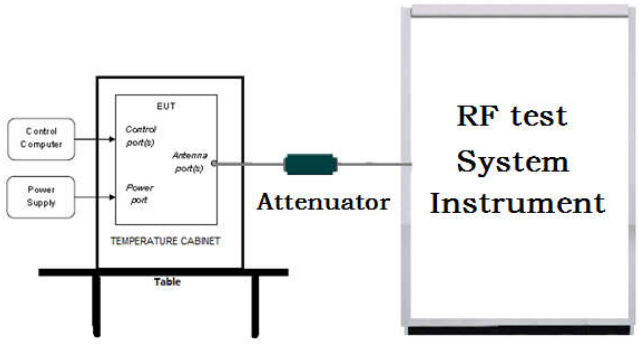 Remark: Offset=Cable loss+ attenuation factor.
Test Procedure:	1. Set the spectrum analyzer or EMI receiver span to view the entire emission bandwidth. 1. Set RBW = 510 kHz/1 MHz, VBW ≥ 3*RBW, Sweep time = Auto, Detector = RMS. 2. Allow the sweeps to continue until the trace stabilizes. 3. Use the peak marker function to determine the maximum amplitude level.
Limit:	

Frequency band (MHz)	Limit
5150-5250	≤17dBm in 1MHz for master device
	≤11dBm in 1MHz for client device
5250-5350	≤11dBm in 1MHz for client device
5470-5725	≤11dBm in 1MHz for client device
5725-5850	≤30dBm in 500kHz
Remark:	The maximum power spectral density is measured as a conducted emission by direct connection of a calibrated test instrument to the equipment under test.

Test Mode:	Transmitting mode with modulation
Test Results:	Refer to Appendix A

6.7 Frequency Stability

Test Requirement:	47 CFR Part 15C Section 15.407 (g)
Test Method:	ANSI C63.10: 2013
Test Setup:	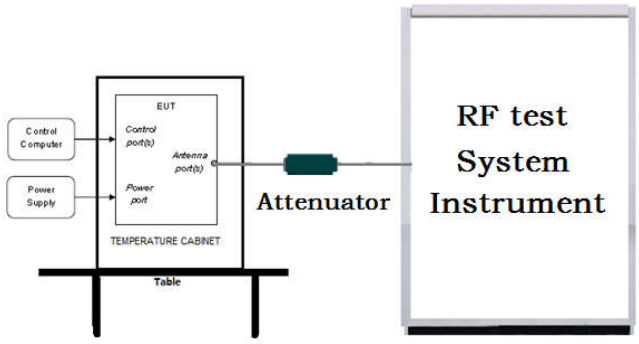 Remark: Offset=Cable loss+ attenuation factor.
Test Procedure:	1.The EUT was placed inside the environmental test chamber and powered by nominal AC/DC voltage. 2. Turn the EUT on and couple its output to a spectrum analyzer. 3. Turn the EUT off and set the chamber to the highest temperature specified. d. Allow sufficient time (approximately 30 min) for the temperature of the chamber to stabilize. 4. Repeat step 2 and 3 with the temperature chamber set to the lowest temperature. 5. The test chamber was allowed to stabilize at +20 degree C for a minimum of 30 minutes. The supply voltage was then adjusted on the EUT from 85% to 115% and the frequency record.
Limit:	The frequency tolerance shall be maintained within the band of operation frequency over a temperature variation of 0 degrees to 45 degrees C at normal supply voltage, and for a variation in the primary supply voltage from 85% to 115% of the rated supply voltage at a temperature of 20 degrees C.
Test Mode:	Transmitting mode with modulation
Test Results:	Refer to Appendix A

6.8 Radiated Emission

Test Requirement:	47 CFR Part 15C Section 15.209 and 15.407 (b)
Test Method:	ANSI C63.10 2013
Test Site:	Measurement Distance: 3m (Semi-Anechoic Chamber)
Receiver Setup:	

Frequency	Detector	RBW	VBW	Remark
0.009MHz-0.090MHz	Peak	10kHz	30kHz	Peak
0.009MHz-0.090MHz	Average	10kHz	30kHz	Average
0.090MHz-0.110MHz	Quasi-peak	10kHz	30kHz	Quasi-peak
0.110MHz-0.490MHz	Peak	10kHz	30kHz	Peak
0.110MHz-0.490MHz	Average	10kHz	30kHz	Average
0.490MHz -30MHz	Quasi-peak	10kHz	30kHz	Quasi-peak
30MHz-1GHz	Quasi-peak	100 kHz	300kHz	Quasi-peak
Above 1GHz	Peak	1MHz	3MHz	Peak
	Peak	1MHz	10kHz	Average

Limit:

Frequency	Field strength (microvolt/meter)	Limit (dBuV/m)	Remark	Measurement distance (m)
0.009MHz-0.490MHz	2400/F(kHz)	-	-	300
0.490MHz-1.705MHz	24000/F(kHz)	-	-	30
1.705MHz-30MHz	30	-	-	30
30MHz-88MHz	100	40.0	Quasi-peak	3
88MHz-216MHz	150	43.5	Quasi-peak	3
216MHz-960MHz	200	46.0	Quasi-peak	3
960MHz-1GHz	500	54.0	Quasi-peak	3
Above 1GHz	500	54.0	Average	3

*(1) For transmitters operating in the 5.15-5.25 GHz band: All emissions outside of the 5.15-5.35 GHz band shall not exceed an e.i.r.p. of −27 dBm/MHz.
(2) For transmitters operating in the 5.25-5.35 GHz band: All emissions outside of the 5.15-5.35 GHz band shall not exceed an e.i.r.p. of −27 dBm/MHz.
(3) For transmitters operating in the 5.47-5.725 GHz band: All emissions outside of the 5.47-5.725 GHz band shall not exceed an e.i.r.p. of −27 dBm/MHz.
(4) For transmitters operating in the 5.725-5.85 GHz band:
(i) All emissions shall be limited to a level of −27 dBm/MHz at 75 MHz or more above or below the band edge increasing linearly to 10 dBm/MHz at 25 MHz above or below the band edge, and from 25 MHz above or below the band edge increasing linearly to a level of 15.6 dBm/MHz at 5 MHz above or below the band edge, and from 5 MHz above or below the band edge increasing linearly to a level of 27 dBm/MHz at the band edge.

Remark: The emission limits shown in the above table are based on measurements employing a CISPR quasi-peak detector except for the frequency bands 9-90kHz, 110-490kHz and above 1000 MHz. Radiated emission limits in these three bands are based on measurements employing

	an average detector, the peak field strength of any emission shall not exceed the maximum permitted average limits specified above by more than 20 dB under any condition of modulation. Note: (i) EIRP = ((E*d)^2) / 30 where: • E is the field strength in V/m; • d is the measurement distance in meters; • EIRP is the equivalent isotropically radiated power in watts. (ii) Working in dB units, the above equation is equivalent to: EIRP[dBm] = E[dBμV/m] + 20 log(d[meters]) - 104.77 (iii) Or, if d is 3 meters: EIRP[dBm] = E[dBμV/m] - 95.2
Test Setup:	

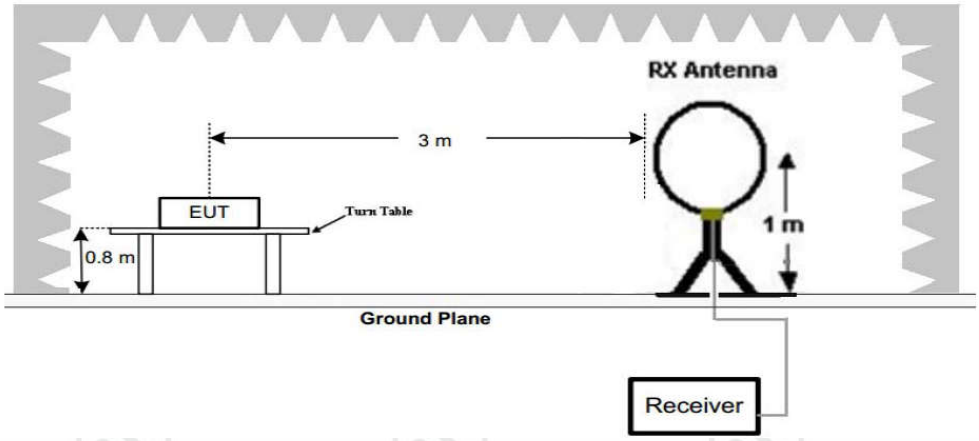

Figure 1. Below 30MHz

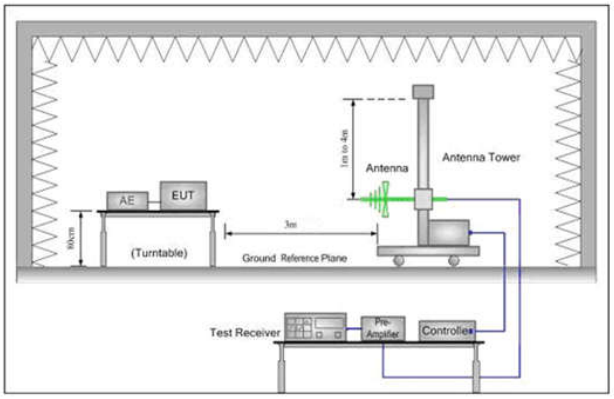

Figure 2. 30MHz to 1GHz

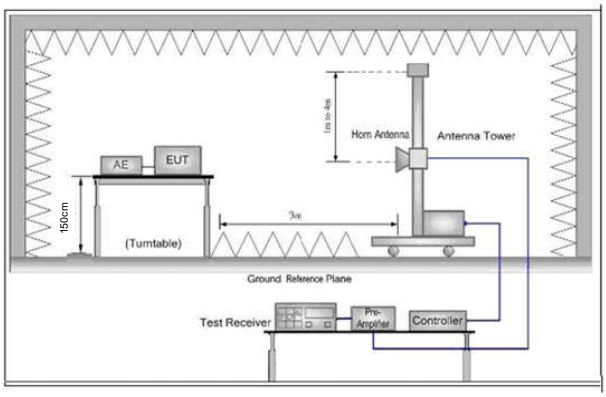

Figure 3. Above 1 GHz

Test Procedure:	a. 1) Below 1G: The EUT was placed on the top of a rotating table 0.8 meters above the ground at a 3 meter semi-anechoic camber. The table was rotated 360 degrees to determine the position of the highest radiation. 2) Above 1G: The EUT was placed on the top of a rotating table 1.5 meters above the ground at a 3 meter semi-anechoic camber. The table was rotated 360 degrees to determine the position of the highest radiation. Note: For the radiated emission test above 1GHz: Place the measurement antenna away from each area of the EUT determined to be a source of emissions at the specified measurement distance, while keeping the measurement antenna aimed at the source of emissions at each frequency of significant emissions, with polarization oriented for maximum response. The measurement antenna may have to be higher or lower than the EUT, depending on the radiation pattern of the emission and staying aimed at the emission source for receiving the maximum signal. The final measurement antenna elevation shall be that which maximizes the emissions. The measurement antenna elevation for maximum emissions shall be restricted to a range of heights of from 1 m to 4 m above the ground or reference ground plane. b. The EUT was set 3 meters away from the interference-receiving antenna, which was mounted on the top of a variable-height antenna tower. c. The antenna height is varied from one meter to four meters above the ground to determine the maximum value of the field strength. Both horizontal and vertical polarizations of the antenna are set to make the measurement. d. For each suspected emission, the EUT was arranged to its worst case and then the antenna was tuned to heights from 1 meter to 4 meters (for the test frequency of below 30MHz, the antenna was tuned to heights 1 meter) and the rotatable table was turned from 0 degrees to 360 degrees to find the maximum reading. e. The test-receiver system was set to Peak Detect Function and Specified Bandwidth with Maximum Hold Mode. f. If the emission level of the EUT in peak mode was 10dB lower than the limit specified, then testing could be stopped and the peak values of the EUT would be reported. Otherwise the emissions that did not have 10dB margin would be re-tested one by one using peak, quasi-peak or average method as specified and then reported in a data sheet. g. Test the EUT in the lowest channel, the middle channel and the highest channel h. The radiation measurements are performed in X, Y, Z axis positioning for Transmitting mode, and found the X axis positioning which it is the worst case. i. Repeat above procedures until all frequencies measured was complete.
Test Mode:	Transmitting mode with modulation
Test Results:	Pass

Radiated Spurious Emissions test Data:
Radiated Emission below 1GHz

Remark: During the test, the Radiates Emission from 30MHz to 1GHz was performed in all modes, only the worst case lowest channel of 6Mbps for 802.11 a was recorded in the report.

Test Graph

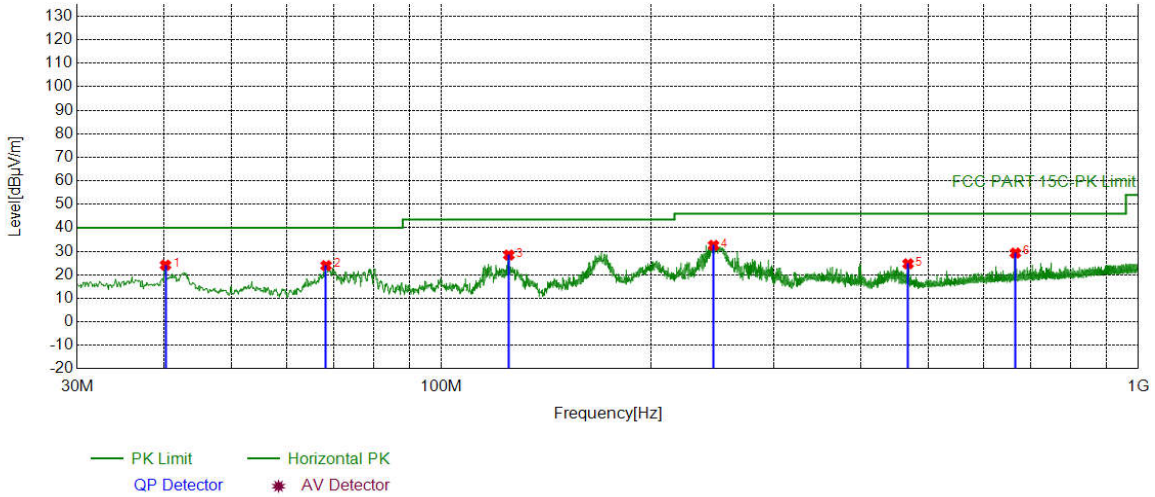

Suspected List									
NO	Freq. [MHz]	Factor [dB]	Reading [dBµV]	Level [dBµV/m]	Limit [dBµV/m]	Margin [dB]	Result	Polarity	Remark
1	40.1860	-18.04	42.16	24.12	40.00	15.88	PASS	Horizontal	PK
2	68.3188	-20.44	44.35	23.91	40.00	16.09	PASS	Horizontal	PK
3	124.9725	-20.85	49.26	28.41	43.50	15.09	PASS	Horizontal	PK
4	245.7496	-16.66	49.21	32.55	46.00	13.45	PASS	Horizontal	PK
5	467.4167	-11.39	36.09	24.70	46.00	21.30	PASS	Horizontal	PK
6	666.2866	-8.06	37.33	29.27	46.00	16.73	PASS	Horizontal	PK

Test Graph

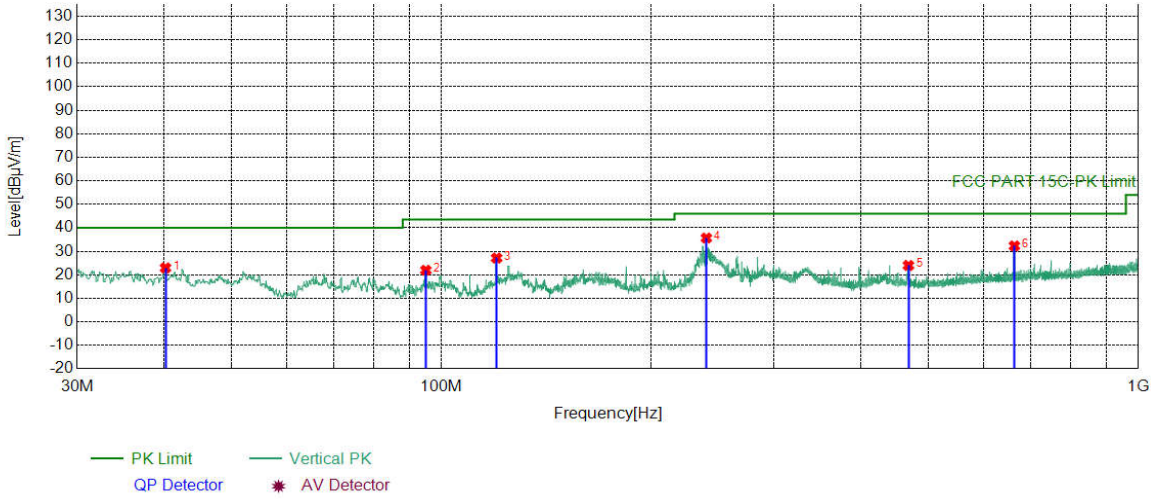

Suspected List									
NO	Freq. [MHz]	Factor [dB]	Reading [dBµV]	Level [dBµV/m]	Limit [dBµV/m]	Margin [dB]	Result	Polarity	Remark
1	40.1860	-18.04	40.98	22.94	40.00	17.06	PASS	Vertical	PK
2	94.9965	-19.29	41.25	21.96	43.50	21.54	PASS	Vertical	PK
3	120.0250	-20.11	47.24	27.13	43.50	16.37	PASS	Vertical	PK
4	240.0260	-16.79	52.46	35.67	46.00	10.33	PASS	Vertical	PK
5	467.9988	-11.38	35.37	23.99	46.00	22.01	PASS	Vertical	PK
6	664.0554	-8.08	40.39	32.31	46.00	13.69	PASS	Vertical	PK

Transmitter Emission above 1GHz

Mode:		802.11 a Transmitting				Channel:		5180MHz	
NO	Freq. [MHz]	Factor [dB]	Reading [dBμV]	Level [dBμV/m]	Limit [dBμV/m]	Margin [dB]	Result	Polarity	Remark
1	1367.4367	1.35	41.89	43.24	68.20	24.96	PASS	Horizontal	PK
2	2092.9593	5.02	41.19	46.21	68.20	21.99	PASS	Horizontal	PK
3	3452.1452	7.60	38.90	46.50	68.20	21.70	PASS	Horizontal	PK
4	7620.7310	-10.67	54.36	43.69	68.20	24.51	PASS	Horizontal	PK
5	11156.0078	-6.03	52.78	46.75	68.20	21.45	PASS	Horizontal	PK
6	14370.4185	0.32	49.78	50.10	68.20	18.10	PASS	Horizontal	PK
7	1104.5105	0.68	43.91	44.59	68.20	23.61	PASS	Vertical	PK
8	1836.0836	3.69	41.20	44.89	68.20	23.31	PASS	Vertical	PK
9	3055.0055	6.69	40.08	46.77	68.20	21.43	PASS	Vertical	PK
10	7544.2522	-10.95	54.45	43.50	68.20	24.70	PASS	Vertical	PK
11	10794.3147	-6.18	53.00	46.82	68.20	21.38	PASS	Vertical	PK
12	13720.6360	-1.88	52.67	50.79	68.20	17.41	PASS	Vertical	PK

Mode:		802.11 a Transmitting				Channel:		5200MHz	
NO	Freq. [MHz]	Factor [dB]	Reading [dBμV]	Level [dBμV/m]	Limit [dBμV/m]	Margin [dB]	Result	Polarity	Remark
1	1396.0396	1.43	41.12	42.55	68.20	25.65	PASS	Horizontal	PK
2	2064.3564	4.90	40.81	45.71	68.20	22.49	PASS	Horizontal	PK
3	3805.8306	8.57	39.20	47.77	68.20	20.43	PASS	Horizontal	PK
4	7604.6302	-10.56	54.41	43.85	68.20	24.35	PASS	Horizontal	PK
5	11254.3377	-6.18	53.75	47.57	68.20	20.63	PASS	Horizontal	PK
6	15893.6697	0.03	51.89	51.92	68.20	16.28	PASS	Horizontal	PK
7	1255.2255	1.00	41.59	42.59	68.20	25.61	PASS	Vertical	PK
8	2099.0099	5.05	40.34	45.39	68.20	22.81	PASS	Vertical	PK
9	3230.4730	7.10	38.89	45.99	68.20	22.21	PASS	Vertical	PK
10	7598.3049	-10.54	53.92	43.38	68.20	24.82	PASS	Vertical	PK
11	10399.8450	-6.27	52.22	45.95	68.20	22.25	PASS	Vertical	PK
12	14349.7175	0.10	50.19	50.29	68.20	17.91	PASS	Vertical	PK

Mode:			802.11 a Transmitting			Channel:		5240MHz	
NO	Freq. [MHz]	Factor [dB]	Reading [dBμV]	Level [dBμV/m]	Limit [dBμV/m]	Margin [dB]	Result	Polarity	Remark
1	1282.1782	1.09	41.89	42.98	68.20	25.22	PASS	Horizontal	PK
2	2117.7118	4.85	40.47	45.32	68.20	22.88	PASS	Horizontal	PK
3	4180.9681	10.02	36.95	46.97	68.20	21.23	PASS	Horizontal	PK
4	7600.0300	-10.53	54.58	44.05	68.20	24.15	PASS	Horizontal	PK
5	10277.9389	-6.42	52.40	45.98	68.20	22.22	PASS	Horizontal	PK
6	13161.7081	-3.02	53.11	50.09	68.20	18.11	PASS	Horizontal	PK
7	1137.5138	0.73	42.18	42.91	68.20	25.29	PASS	Vertical	PK
8	1629.2629	2.62	40.67	43.29	68.20	24.91	PASS	Vertical	PK
9	2436.1936	4.66	40.63	45.29	68.20	22.91	PASS	Vertical	PK
10	7396.4698	-11.48	55.43	43.95	68.20	24.25	PASS	Vertical	PK
11	9610.3305	-7.35	53.65	46.30	68.20	21.90	PASS	Vertical	PK
12	14353.1677	0.13	50.73	50.86	68.20	17.34	PASS	Vertical	PK

Mode:			802.11 n(HT40) Transmitting			Channel:		5190MHz	
NO	Freq. [MHz]	Factor [dB]	Reading [dBμV]	Level [dBμV/m]	Limit [dBμV/m]	Margin [dB]	Result	Polarity	Remark
1	1316.2816	1.20	41.49	42.69	68.20	25.51	PASS	Horizontal	PK
2	1949.9450	4.40	40.34	44.74	68.20	23.46	PASS	Horizontal	PK
3	3497.2497	7.62	38.84	46.46	68.20	21.74	PASS	Horizontal	PK
4	7587.9544	-10.62	53.98	43.36	68.20	24.84	PASS	Horizontal	PK
5	12448.0974	-4.14	53.45	49.31	68.20	18.89	PASS	Horizontal	PK
6	16447.9974	0.06	52.25	52.31	68.20	15.89	PASS	Horizontal	PK
7	1310.7811	1.18	41.69	42.87	68.20	25.33	PASS	Vertical	PK
8	2077.5578	4.95	39.43	44.38	68.20	23.82	PASS	Vertical	PK
9	3346.5347	7.47	39.96	47.43	68.20	20.77	PASS	Vertical	PK
10	7598.8799	-10.54	54.00	43.46	68.20	24.74	PASS	Vertical	PK
11	10379.7190	-6.27	52.33	46.06	68.20	22.14	PASS	Vertical	PK
12	14318.6659	-0.24	50.49	50.25	68.20	17.95	PASS	Vertical	PK

Mode:			802.11 n(HT40) Transmitting			Channel:		5230MHz	
NO	Freq. [MHz]	Factor [dB]	Reading [dBμV]	Level [dBμV/m]	Limit [dBμV/m]	Margin [dB]	Result	Polarity	Remark
1	1435.0935	1.49	41.51	43.00	68.20	25.20	PASS	Horizontal	PK
2	2101.2101	5.04	40.00	45.04	68.20	23.16	PASS	Horizontal	PK
3	3810.2310	8.59	38.96	47.55	68.20	20.65	PASS	Horizontal	PK
4	7806.4653	-11.33	54.77	43.44	68.20	24.76	PASS	Horizontal	PK
5	9673.5837	-7.51	53.76	46.25	68.20	21.95	PASS	Horizontal	PK
6	14384.7942	0.48	49.67	50.15	68.20	18.05	PASS	Horizontal	PK
7	1331.1331	1.24	41.49	42.73	68.20	25.47	PASS	Vertical	PK
8	2031.9032	4.76	40.22	44.98	68.20	23.22	PASS	Vertical	PK
9	3448.8449	7.59	39.75	47.34	68.20	20.86	PASS	Vertical	PK
10	7553.4527	-10.88	54.26	43.38	68.20	24.82	PASS	Vertical	PK
11	11763.8132	-6.05	53.61	47.56	68.20	20.64	PASS	Vertical	PK
12	15899.4200	0.12	51.08	51.20	68.20	17.00	PASS	Vertical	PK

Mode:			802.11 ac(VHT80) Transmitting			Channel:		5210MHz	
NO	Freq. [MHz]	Factor [dB]	Reading [dBμV]	Level [dBμV/m]	Limit [dBμV/m]	Margin [dB]	Result	Polarity	Remark
1	1246.4246	0.97	40.83	41.80	68.20	26.40	PASS	Horizontal	PK
2	1625.4125	2.59	41.62	44.21	68.20	23.99	PASS	Horizontal	PK
3	3085.2585	6.78	40.21	46.99	68.20	21.21	PASS	Horizontal	PK
4	7640.2820	-10.80	54.13	43.33	68.20	24.87	PASS	Horizontal	PK
5	10419.9710	-6.32	53.37	47.05	68.20	21.15	PASS	Horizontal	PK
6	14400.8950	0.63	50.40	51.03	68.20	17.17	PASS	Horizontal	PK
7	1423.5424	1.47	41.53	43.00	68.20	25.20	PASS	Vertical	PK
8	2157.3157	4.41	39.96	44.37	68.20	23.83	PASS	Vertical	PK
9	3345.4345	7.47	39.07	46.54	68.20	21.66	PASS	Vertical	PK
10	7564.9532	-10.79	54.37	43.58	68.20	24.62	PASS	Vertical	PK
11	10419.9710	-6.32	53.09	46.77	68.20	21.43	PASS	Vertical	PK
12	13728.6864	-1.94	51.85	49.91	68.20	18.29	PASS	Vertical	PK

Mode:		802.11 a Transmitting				Channel:		5745MHz	
NO	Freq. [MHz]	Factor [dB]	Reading [dBμV]	Level [dBμV/m]	Limit [dBμV/m]	Margin [dB]	Result	Polarity	Remark
1	1198.0198	1.08	43.65	44.73	68.20	23.47	PASS	Horizontal	PK
2	1920.2420	4.79	40.93	45.72	68.20	22.48	PASS	Horizontal	PK
3	3201.3201	7.83	39.93	47.76	68.20	20.44	PASS	Horizontal	PK
4	7582.6055	-10.66	54.69	44.03	68.20	24.17	PASS	Horizontal	PK
5	10332.0555	-6.26	52.44	46.18	68.20	22.02	PASS	Horizontal	PK
6	14361.1574	0.22	50.41	50.63	68.20	17.57	PASS	Horizontal	PK
7	1226.0726	1.23	42.31	43.54	68.20	24.66	PASS	Vertical	PK
8	2069.3069	5.46	40.68	46.14	68.20	22.06	PASS	Vertical	PK
9	3808.5809	9.40	38.30	47.70	68.20	20.50	PASS	Vertical	PK
10	9237.9492	-7.67	52.72	45.05	68.20	23.15	PASS	Vertical	PK
11	11817.1878	-6.07	53.75	47.68	68.20	20.52	PASS	Vertical	PK
12	14401.7935	0.61	49.00	49.61	68.20	18.59	PASS	Vertical	PK

Mode:		802.11 a Transmitting				Channel:		5785MHz	
NO	Freq. [MHz]	Factor [dB]	Reading [dBμV]	Level [dBμV/m]	Limit [dBμV/m]	Margin [dB]	Result	Polarity	Remark
1	1138.6139	1.09	42.93	44.02	68.20	24.18	PASS	Horizontal	PK
2	1923.5424	4.80	39.97	44.77	68.20	23.43	PASS	Horizontal	PK
3	3198.0198	7.82	39.38	47.20	68.20	21.00	PASS	Horizontal	PK
4	8321.7214	-10.94	54.39	43.45	68.20	24.75	PASS	Horizontal	PK
5	10693.9463	-6.19	52.88	46.69	68.20	21.51	PASS	Horizontal	PK
6	14360.3907	0.21	50.46	50.67	68.20	17.53	PASS	Horizontal	PK
7	1162.2662	1.08	42.20	43.28	68.20	24.92	PASS	Vertical	PK
8	1925.1925	4.81	40.32	45.13	68.20	23.07	PASS	Vertical	PK
9	3343.7844	8.25	39.30	47.55	68.20	20.65	PASS	Vertical	PK
10	7571.8715	-10.74	54.39	43.65	68.20	24.55	PASS	Vertical	PK
11	10384.1923	-6.27	52.47	46.20	68.20	22.00	PASS	Vertical	PK
12	14386.4591	0.49	50.31	50.80	68.20	17.40	PASS	Vertical	PK

Mode:		802.11 a Transmitting				Channel:		5825MHz	
NO	Freq. [MHz]	Factor [dB]	Reading [dBμV]	Level [dBμV/m]	Limit [dBμV/m]	Margin [dB]	Result	Polarity	Remark
1	1196.9197	1.08	43.72	44.80	68.20	23.40	PASS	Horizontal	PK
2	2039.6040	5.30	40.30	45.60	68.20	22.60	PASS	Horizontal	PK
3	3836.0836	9.49	38.09	47.58	68.20	20.62	PASS	Horizontal	PK
4	7764.3176	-11.29	54.87	43.58	68.20	24.62	PASS	Horizontal	PK
5	9657.3438	-7.47	53.28	45.81	68.20	22.39	PASS	Horizontal	PK
6	14372.6582	0.34	50.88	51.22	68.20	16.98	PASS	Horizontal	PK
7	1194.7195	1.08	42.74	43.82	68.20	24.38	PASS	Vertical	PK
8	2041.8042	5.31	41.01	46.32	68.20	21.88	PASS	Vertical	PK
9	2679.8680	6.04	39.61	45.65	68.20	22.55	PASS	Vertical	PK
10	8534.1023	-10.56	53.41	42.85	68.20	25.35	PASS	Vertical	PK
11	9658.1105	-7.47	53.60	46.13	68.20	22.07	PASS	Vertical	PK
12	14370.3580	0.32	50.03	50.35	68.20	17.85	PASS	Vertical	PK

Mode:		802.11 n(HT40) Transmitting				Channel:		5755MHz	
NO	Freq. [MHz]	Factor [dB]	Reading [dBμV]	Level [dBμV/m]	Limit [dBμV/m]	Margin [dB]	Result	Polarity	Remark
1	1113.8614	1.09	42.68	43.77	68.20	24.43	PASS	Horizontal	PK
2	1953.7954	4.91	40.98	45.89	68.20	22.31	PASS	Horizontal	PK
3	4252.4752	11.37	36.65	48.02	68.20	20.18	PASS	Horizontal	PK
4	7604.0736	-10.56	53.79	43.23	68.20	24.97	PASS	Horizontal	PK
5	10775.2183	-6.18	52.33	46.15	68.20	22.05	PASS	Horizontal	PK
6	14332.7889	-0.09	50.65	50.56	68.20	17.64	PASS	Horizontal	PK
7	1344.8845	1.72	41.80	43.52	68.20	24.68	PASS	Vertical	PK
8	2100.1100	5.63	40.19	45.82	68.20	22.38	PASS	Vertical	PK
9	4108.9109	10.49	37.44	47.93	68.20	20.27	PASS	Vertical	PK
10	7617.8745	-10.65	54.54	43.89	68.20	24.31	PASS	Vertical	PK
11	9662.7108	-7.48	53.75	46.27	68.20	21.93	PASS	Vertical	PK
12	14409.4606	0.50	49.67	50.17	68.20	18.03	PASS	Vertical	PK

Mode:			802.11 n(HT40) Transmitting			Channel:		5795MHz	
NO	Freq. [MHz]	Factor [dB]	Reading [dBμV]	Level [dBμV/m]	Limit [dBμV/m]	Margin [dB]	Result	Polarity	Remark
1	1288.2288	1.57	41.43	43.00	68.20	25.20	PASS	Horizontal	PK
2	2046.7547	5.34	40.56	45.90	68.20	22.30	PASS	Horizontal	PK
3	3962.5963	10.13	37.80	47.93	68.20	20.27	PASS	Horizontal	PK
4	8744.9497	-9.66	52.74	43.08	68.20	25.12	PASS	Horizontal	PK
5	11891.5594	-5.50	54.36	48.86	68.20	19.34	PASS	Horizontal	PK
6	14338.9226	-0.02	50.29	50.27	68.20	17.93	PASS	Horizontal	PK
7	1297.5798	1.63	41.07	42.70	68.20	25.50	PASS	Vertical	PK
8	1889.9890	4.62	39.83	44.45	68.20	23.75	PASS	Vertical	PK
9	3038.5039	7.33	39.61	46.94	68.20	21.26	PASS	Vertical	PK
10	7618.6412	-10.65	53.92	43.27	68.20	24.93	PASS	Vertical	PK
11	11793.4196	-6.17	54.47	48.30	68.20	19.90	PASS	Vertical	PK
12	14394.1263	0.58	50.24	50.82	68.20	17.38	PASS	Vertical	PK

Mode:			802.11 ac(VHT80) Transmitting			Channel:		5775MHz	
NO	Freq. [MHz]	Factor [dB]	Reading [dBμV]	Level [dBμV/m]	Limit [dBμV/m]	Margin [dB]	Result	Polarity	Remark
1	1688.6689	3.49	41.01	44.50	68.20	23.70	PASS	Horizontal	PK
2	2509.3509	5.46	41.55	47.01	68.20	21.19	PASS	Horizontal	PK
3	3772.8273	9.07	38.19	47.26	68.20	20.94	PASS	Horizontal	PK
4	7671.5448	-11.00	54.27	43.27	68.20	24.93	PASS	Horizontal	PK
5	9676.5118	-7.51	53.76	46.25	68.20	21.95	PASS	Horizontal	PK
6	12448.1965	-4.14	53.08	48.94	68.20	19.26	PASS	Horizontal	PK
7	1432.8933	1.85	42.51	44.36	68.20	23.84	PASS	Vertical	PK
8	2030.2530	5.25	40.96	46.21	68.20	21.99	PASS	Vertical	PK
9	3139.1639	7.72	39.29	47.01	68.20	21.19	PASS	Vertical	PK
10	7616.3411	-10.64	54.84	44.20	68.20	24.00	PASS	Vertical	PK
11	9619.0079	-7.38	53.99	46.61	68.20	21.59	PASS	Vertical	PK
12	14411.7608	0.47	49.43	49.90	68.20	18.30	PASS	Vertical	PK

Remark:

1) The field strength is calculated by adding the Antenna Factor, Cable Factor & Preamplifier. The basic equation with a sample calculation is as follows:

   Final Test Level =Receiver Reading + Factor

   Factor=Antenna Factor + Cable Factor – Preamplifier Factor

2) Scan from 9kHz to 25GHz, the disturbance above 10GHz and below 30MHz was very low. As shown in this section, for frequencies above 1GHz, the field strength limits are based on average limits. However, the peak field strength of any emission shall not exceed the maximum permitted average limits specified above by more than 20 dB under any condition of modulation. So, only the peak measurements were shown in the report.

3) Through Pre-scan, for 20MHz Occupied Bandwidth, 802.11 a mode was the worst case; for 40MHz Occupied Bandwidth, 802.11 n(HT40) mode was the worst case; for 80MHz Occupied Bandwidth, 802.11 ac(VHT80) mode was the worst case; only the worst case was in the report.

6.9 Radiated Emission which fall in the restricted bands

Test Requirement:	47 CFR Part 15C Section 15.209 and 15.407 (b)
Test Method:	ANSI C63.10 2013
Test Site:	Measurement Distance: 3m (Semi-Anechoic Chamber)
Receiver Setup:	

Frequency	Detector	RBW	VBW	Remark
0.009MHz-0.090MHz	Peak	10kHz	30kHz	Peak
0.009MHz-0.090MHz	Average	10kHz	30kHz	Average
0.090MHz-0.110MHz	Quasi-peak	10kHz	30kHz	Quasi-peak
0.110MHz-0.490MHz	Peak	10kHz	30kHz	Peak
0.110MHz-0.490MHz	Average	10kHz	30kHz	Average
0.490MHz -30MHz	Quasi-peak	10kHz	30kHz	Quasi-peak
30MHz-1GHz	Quasi-peak	100 kHz	300kHz	Quasi-peak
Above 1GHz	Peak	1MHz	3MHz	Peak
	Peak	1MHz	10kHz	Average

Limit:

Frequency	Field strength (microvolt/meter)	Limit (dBuV/m)	Remark	Measurement distance (m)
0.009MHz-0.490MHz	2400/F(kHz)	-	-	300
0.490MHz-1.705MHz	24000/F(kHz)	-	-	30
1.705MHz-30MHz	30	-	-	30
30MHz-88MHz	100	40.0	Quasi-peak	3
88MHz-216MHz	150	43.5	Quasi-peak	3
216MHz-960MHz	200	46.0	Quasi-peak	3
960MHz-1GHz	500	54.0	Quasi-peak	3
Above 1GHz	500	54.0	Average	3

*(1) For transmitters operating in the 5.15-5.25 GHz band: All emissions outside of the 5.15-5.35 GHz band shall not exceed an e.i.r.p. of −27 dBm/MHz.
(2) For transmitters operating in the 5.25-5.35 GHz band: All emissions outside of the 5.15-5.35 GHz band shall not exceed an e.i.r.p. of −27 dBm/MHz.
(3) For transmitters operating in the 5.47-5.725 GHz band: All emissions outside of the 5.47-5.725 GHz band shall not exceed an e.i.r.p. of −27 dBm/MHz.
(4) For transmitters operating in the 5.725-5.85 GHz band:
(i) All emissions shall be limited to a level of −27 dBm/MHz at 75 MHz or more above or below the band edge increasing linearly to 10 dBm/MHz at 25 MHz above or below the band edge, and from 25 MHz above or below the band edge increasing linearly to a level of 15.6 dBm/MHz at 5 MHz above or below the band edge, and from 5 MHz above or below the band edge increasing linearly to a level of 27 dBm/MHz at the band edge.
Remark: The emission limits shown in the above table are based on measurements employing a CISPR quasi-peak detector except for the frequency bands 9-90kHz, 110-490kHz and above 1000 MHz. Radiated

emission limits in these three bands are based on measurements employing an average detector, the peak field strength of any emission shall not exceed the maximum permitted average limits specified above by more than 20 dB under any condition of modulation.

Note:
(i) EIRP = ((E*d)^2) / 30
where:
• E is the field strength in V/m;
• d is the measurement distance in meters;
• EIRP is the equivalent isotropically radiated power in watts.
(ii) Working in dB units, the above equation is equivalent to:
EIRP[dBm] = E[dBμV/m] + 20 log(d[meters]) - 104.77
(iii) Or, if d is 3 meters:
EIRP[dBm] = E[dBμV/m] - 95.2

Test Setup:

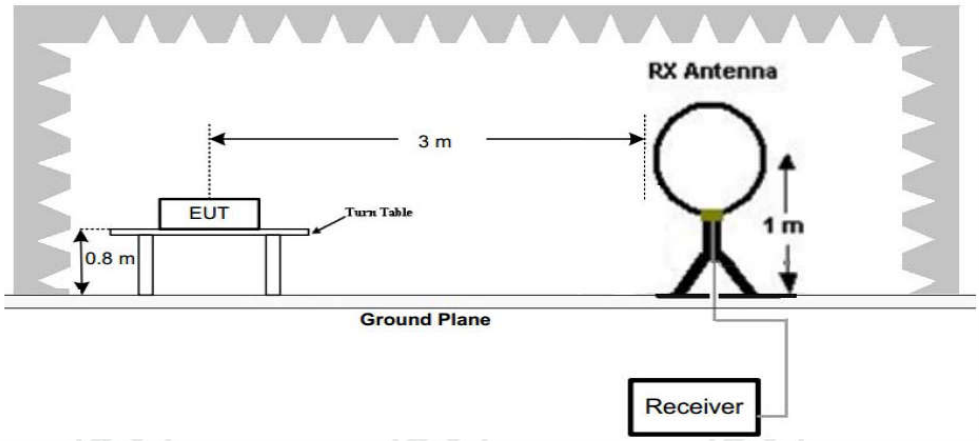

Figure 1. Below 30MHz

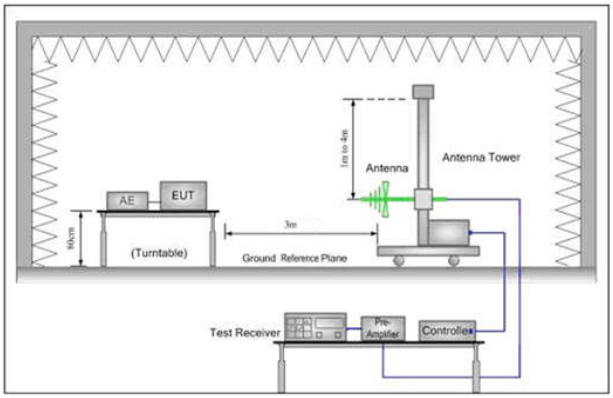

Figure 2. 30MHz to 1GHz

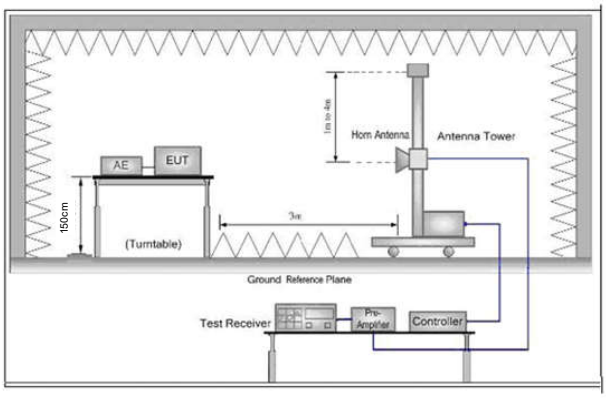

Figure 3. Above 1 GHz

Test Procedure:

j. 1) Below 1G: The EUT was placed on the top of a rotating table 0.8 meters above the ground at a 3 meter semi-anechoic camber. The table was rotated 360 degrees to determine the position of the highest radiation.
2) Above 1G: The EUT was placed on the top of a rotating table 1.5 meters above the ground at a 3 meter semi-anechoic camber. The table was rotated 360 degrees to determine the position of the highest radiation.

	Note: For the radiated emission test above 1GHz: Place the measurement antenna away from each area of the EUT determined to be a source of emissions at the specified measurement distance, while keeping the measurement antenna aimed at the source of emissions at each frequency of significant emissions, with polarization oriented for maximum response. The measurement antenna may have to be higher or lower than the EUT, depending on the radiation pattern of the emission and staying aimed at the emission source for receiving the maximum signal. The final measurement antenna elevation shall be that which maximizes the emissions. The measurement antenna elevation for maximum emissions shall be restricted to a range of heights of from 1 m to 4 m above the ground or reference ground plane. k. The EUT was set 3 meters away from the interference-receiving antenna, which was mounted on the top of a variable-height antenna tower. l. The antenna height is varied from one meter to four meters above the ground to determine the maximum value of the field strength. Both horizontal and vertical polarizations of the antenna are set to make the measurement. m. For each suspected emission, the EUT was arranged to its worst case and then the antenna was tuned to heights from 1 meter to 4 meters (for the test frequency of below 30MHz, the antenna was tuned to heights 1 meter) and the rotatable table was turned from 0 degrees to 360 degrees to find the maximum reading. n. The test-receiver system was set to Peak Detect Function and Specified Bandwidth with Maximum Hold Mode. o. If the emission level of the EUT in peak mode was 10dB lower than the limit specified, then testing could be stopped and the peak values of the EUT would be reported. Otherwise the emissions that did not have 10dB margin would be re-tested one by one using peak, quasi-peak or average method as specified and then reported in a data sheet. p. Test the EUT in the lowest channel, the Highest channel q. The radiation measurements are performed in X, Y, Z axis positioning for Transmitting mode, and found the X axis positioning which it is the worst case. r. Repeat above procedures until all frequencies measured was complete.
Test Mode:	Transmitting mode with modulation
Test Results:	Pass

Test Data:

Mode:	802.11 a Transmitting	Channel:	5180
Remark:			

Test Graph

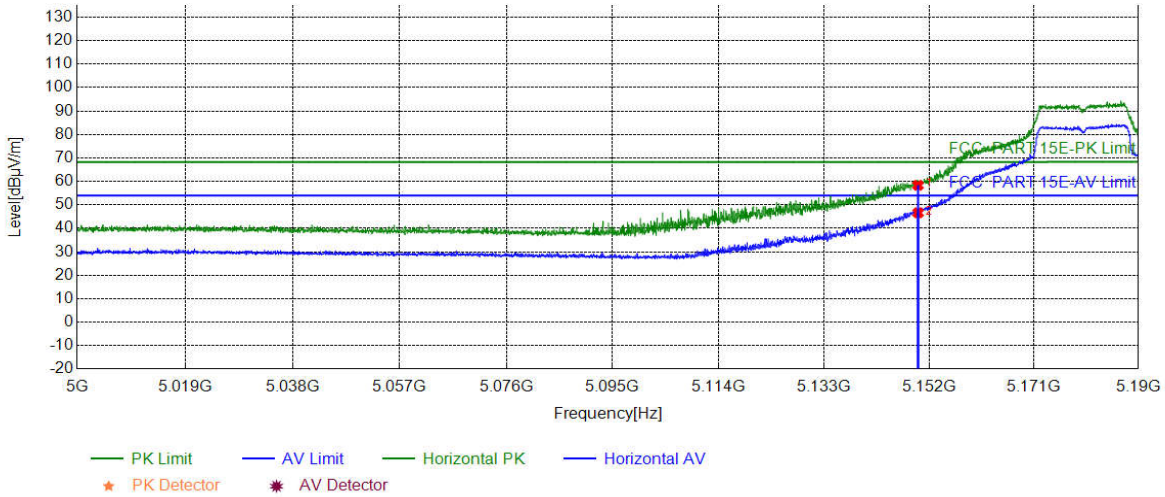

Suspected List									
NO	Freq. [MHz]	Factor [dB]	Reading [dBμV]	Level [dBμV/m]	Limit [dBμV/m]	Margin [dB]	Result	Polarity	Remark
1	5150.00	-15.08	73.41	58.33	68.29	9.96	PASS	Horizontal	PK
2	5150.00	-15.08	61.71	46.63	54.00	7.37	PASS	Horizontal	AV

Mode:	802.11 a Transmitting	Channel:	5180
Remark:			

Test Graph

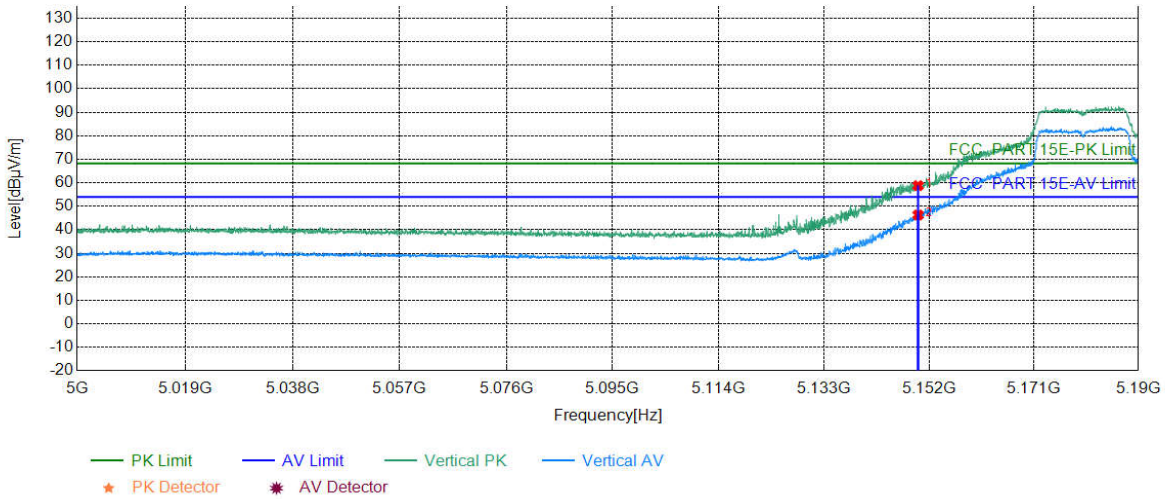

Suspected List									
NO	Freq. [MHz]	Factor [dB]	Reading [dBµV]	Level [dBµV/m]	Limit [dBµV/m]	Margin [dB]	Result	Polarity	Remark
1	5150.00	-15.08	73.87	58.79	68.29	9.50	PASS	Vertical	PK
2	5150.00	-15.08	61.38	46.30	54.00	7.70	PASS	Vertical	AV

Mode:	802.11 n(HT40) Transmitting	Channel:	5190
Remark:			

Test Graph

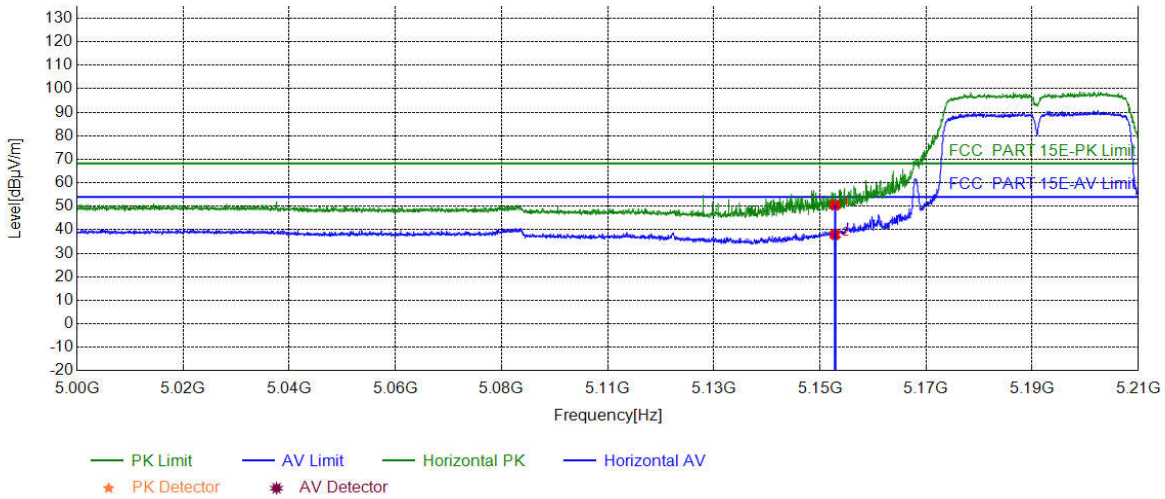

Suspected List									
NO	Freq. [MHz]	Factor [dB]	Reading [dBμV]	Level [dBμV/m]	Limit [dBμV/m]	Margin [dB]	Result	Polarity	Remark
1	5150.00	12.36	38.16	50.52	68.20	17.68	PASS	Horizontal	PK
2	5150.00	12.36	25.61	37.97	54.00	16.03	PASS	Horizontal	AV

Mode:	802.11 n(HT40) Transmitting	Channel:	5190
Remark:			

Test Graph

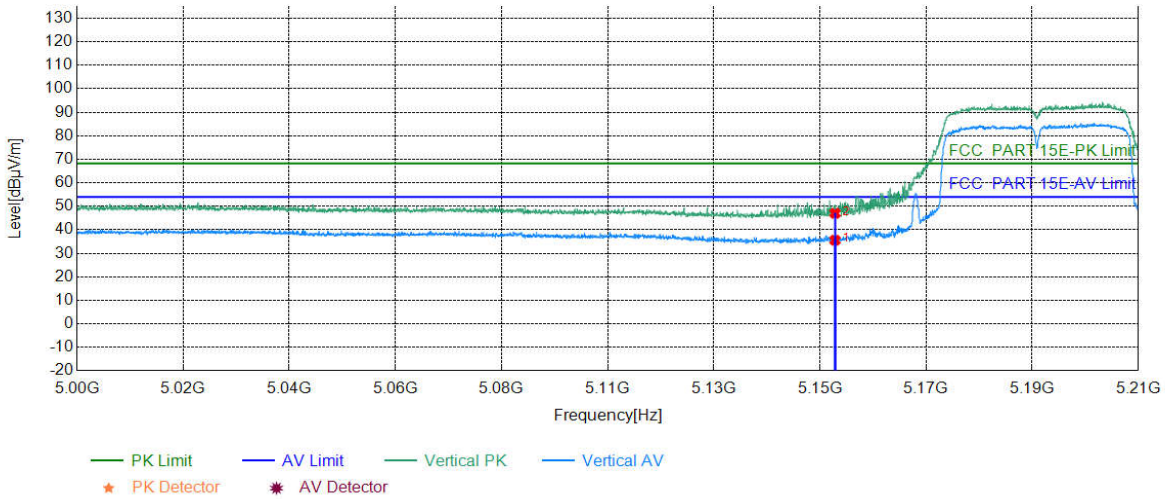

Suspected List									
NO	Freq. [MHz]	Factor [dB]	Reading [dBμV]	Level [dBμV/m]	Limit [dBμV/m]	Margin [dB]	Result	Polarity	Remark
1	5150.00	12.36	23.21	35.57	54.00	18.43	PASS	Vertical	PK
2	5150.00	12.36	34.67	47.03	68.20	21.17	PASS	Vertical	AV

Mode:	802.11 ac(VHT80) Transmitting	Channel:	5210
Remark:			

Test Graph

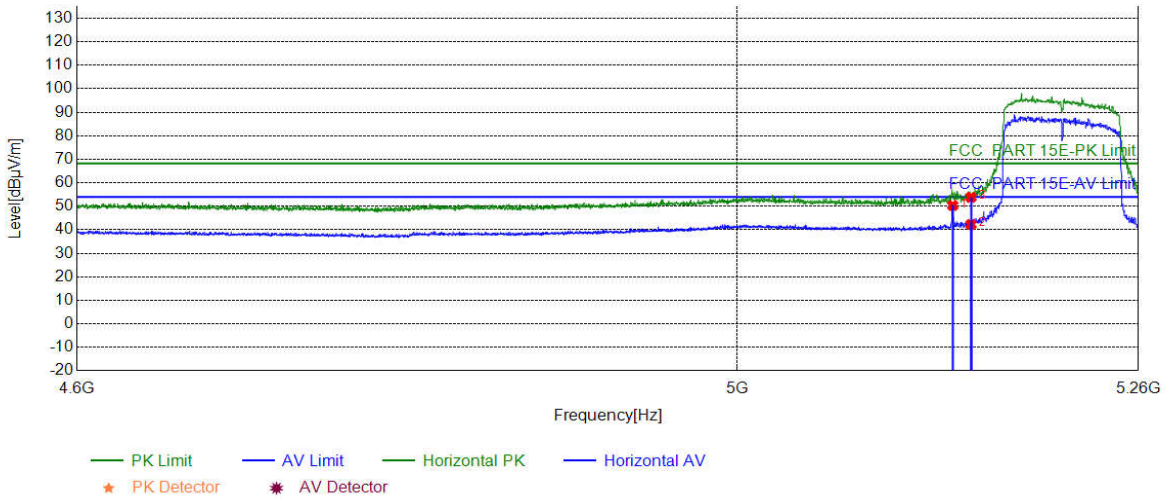

Suspected List									
NO	Freq. [MHz]	Factor [dB]	Reading [dBμV]	Level [dBμV/m]	Limit [dBμV/m]	Margin [dB]	Result	Polarity	Remark
1	5138.19	12.34	38.00	50.34	54.00	3.66	PASS	Horizontal	AV
2	5150.00	12.36	29.92	42.28	54.00	11.72	PASS	Horizontal	AV
3	5150.00	12.36	41.47	53.83	68.20	14.37	PASS	Horizontal	PK

Mode:	802.11 ac(VHT80) Transmitting	Channel:	5210
Remark:			

Test Graph

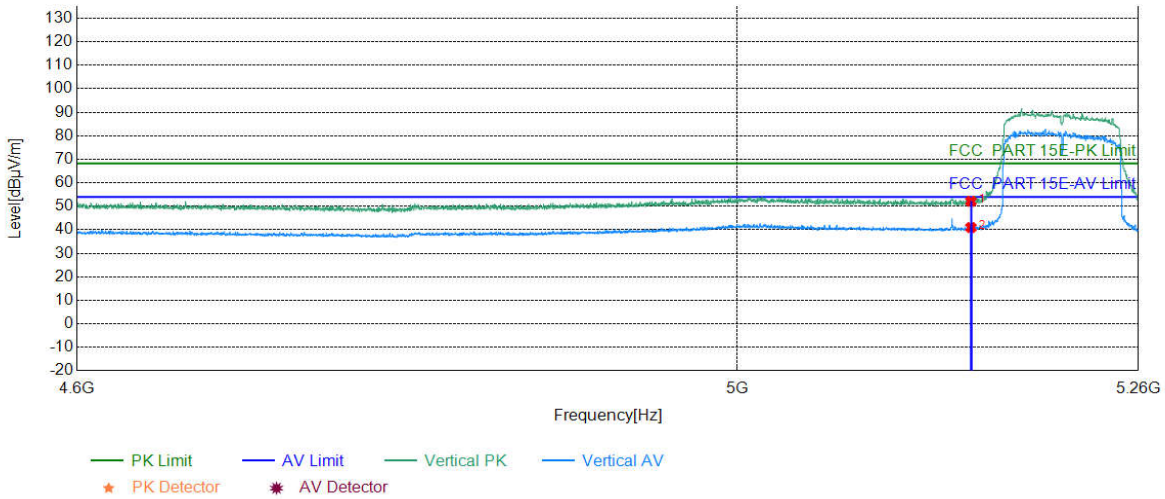

Suspected List									
NO	Freq. [MHz]	Factor [dB]	Reading [dBμV]	Level [dBμV/m]	Limit [dBμV/m]	Margin [dB]	Result	Polarity	Remark
1	5150.00	12.36	39.76	52.12	68.20	16.08	PASS	Vertical	PK
2	5150.00	12.36	28.61	40.97	54.00	13.03	PASS	Vertical	AV

1) Through Pre-scan transmitting mode and charge+transmitter mode with all kind of modulation and data rate and then Only the worst case is recorded in the report.

2) The field strength is calculated by adding the Antenna Factor, Cable Factor & Preamplifier. The basic equation with a sample calculation is as follows:

Final Test Level =Receiver Reading - Correct Factor

Correct Factor = Preamplifier Factor– Antenna Factor–Cable Factor

7 Appendix A

Refer to Appendix: 5G WIFI of EED32O80125304

PHOTOGRAPHS OF TEST SETUP

Test model No.: G1

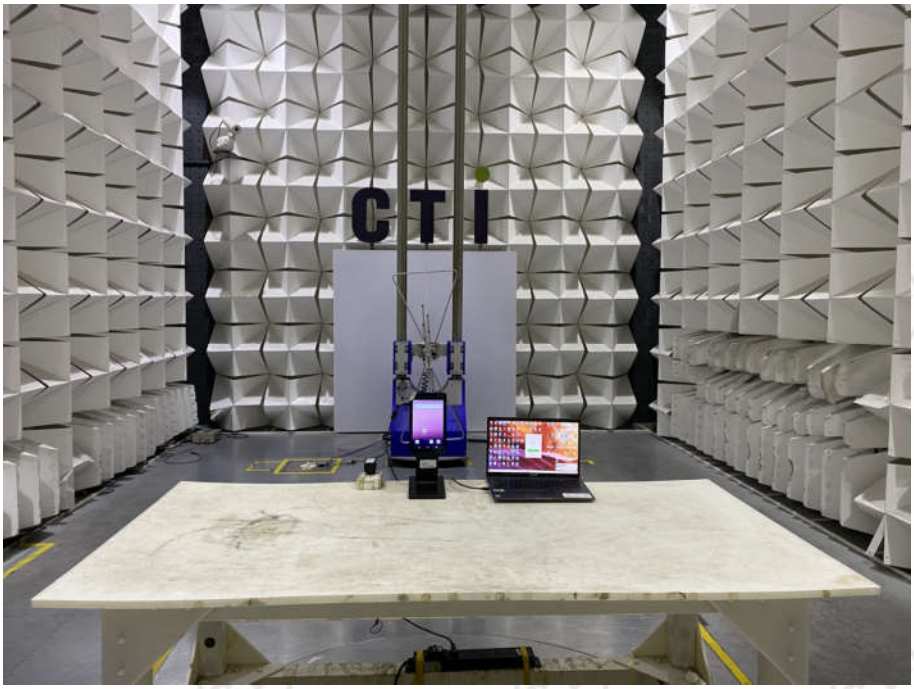

Radiated spurious emission Test Setup-1(Below 1GHz)

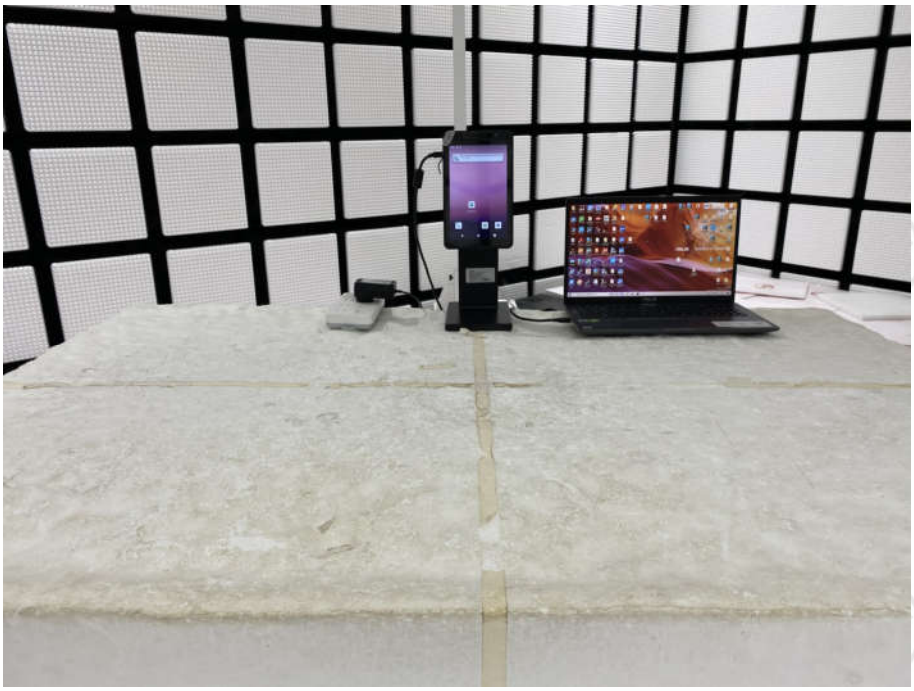

Radiated spurious emission Test Setup-2(Above 1GHz)

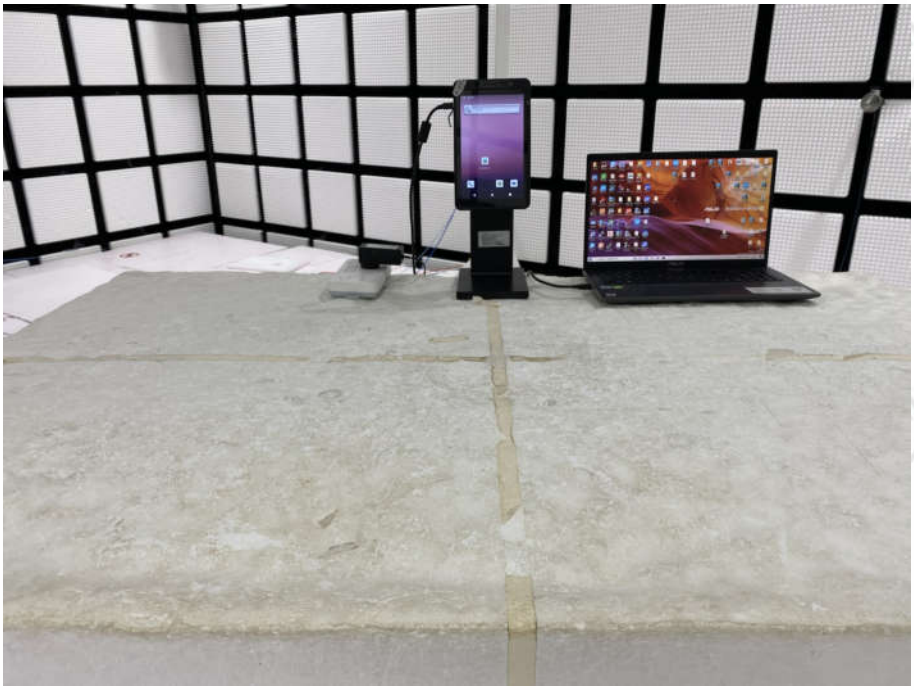

Radiated spurious emission Test Setup-3(Above 18GHz)

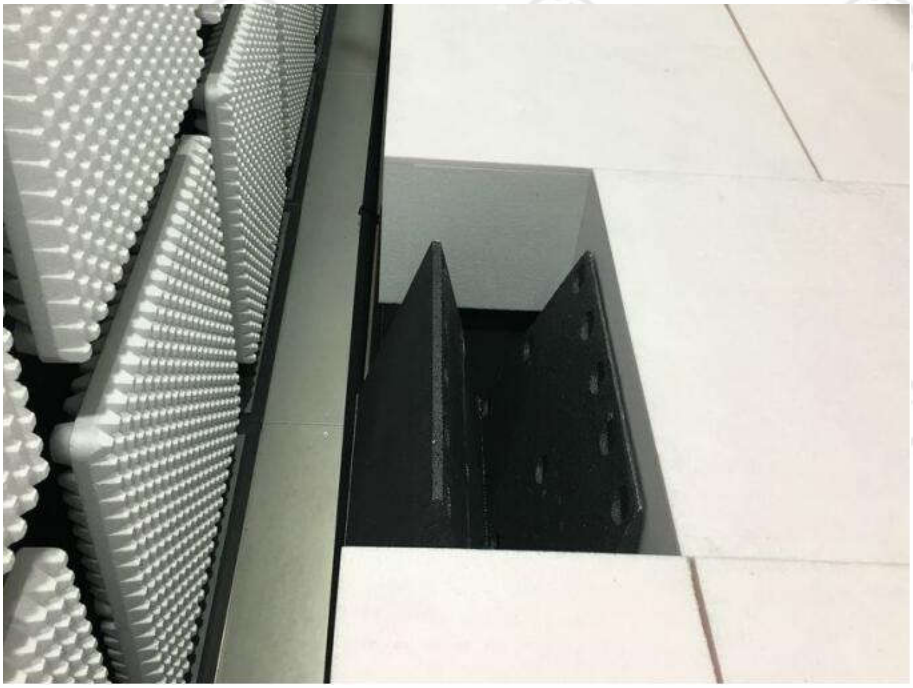

Radiated spurious emission Test Setup-4(Above 1GHz)
There are absorbing materials under the ground.

Conducted Emissions Test Setup

PHOTOGRAPHS OF EUT Constructional Details

Refer to Report No.EED32O80125301 for EUT external and internal photos.

The test report is effective only with both signature and specialized stamp, The result(s) shown in this report refer only to the sample(s) tested. Without written approval of CTI, this report can't be reproduced except in full.

*** End of Report ***