REXING®

Walmart Exclusive

RW4

Quick Start Guide

The information in this manual is subject to change without notice.

www.rexingusa.com

REV10182024

Activate Your

18-MONTH

WARRANTY

& Choose Your

FREE Gift!

Activate **within 30 days** of purchase to claim your free gift and extend your limited 12-month warranty to **18 months**.

Scan The QR To Activate & Select Your Free Gift

SCAN ME

WARRANTY

https://www.rexingusa.com/productreg/

Walmart Exclusive

Overview

Thank you for choosing REXING!

We hope you love your new products as much as we do. If you need assistance, or have any suggestions to improve it, please contact us.

care@rexingusa.com

(877) 740-8004

Our support team will respond to you as soon as possible.

Always a surprise with Rexing

Check us out here.

- https://www.facebook.com/rexingusa/
- https://www.instagram.com/rexingdashcam/
- https://www.rexingusa.com/support/registration/

Facebook

Instagram

Site

Product Support

What's in the box?

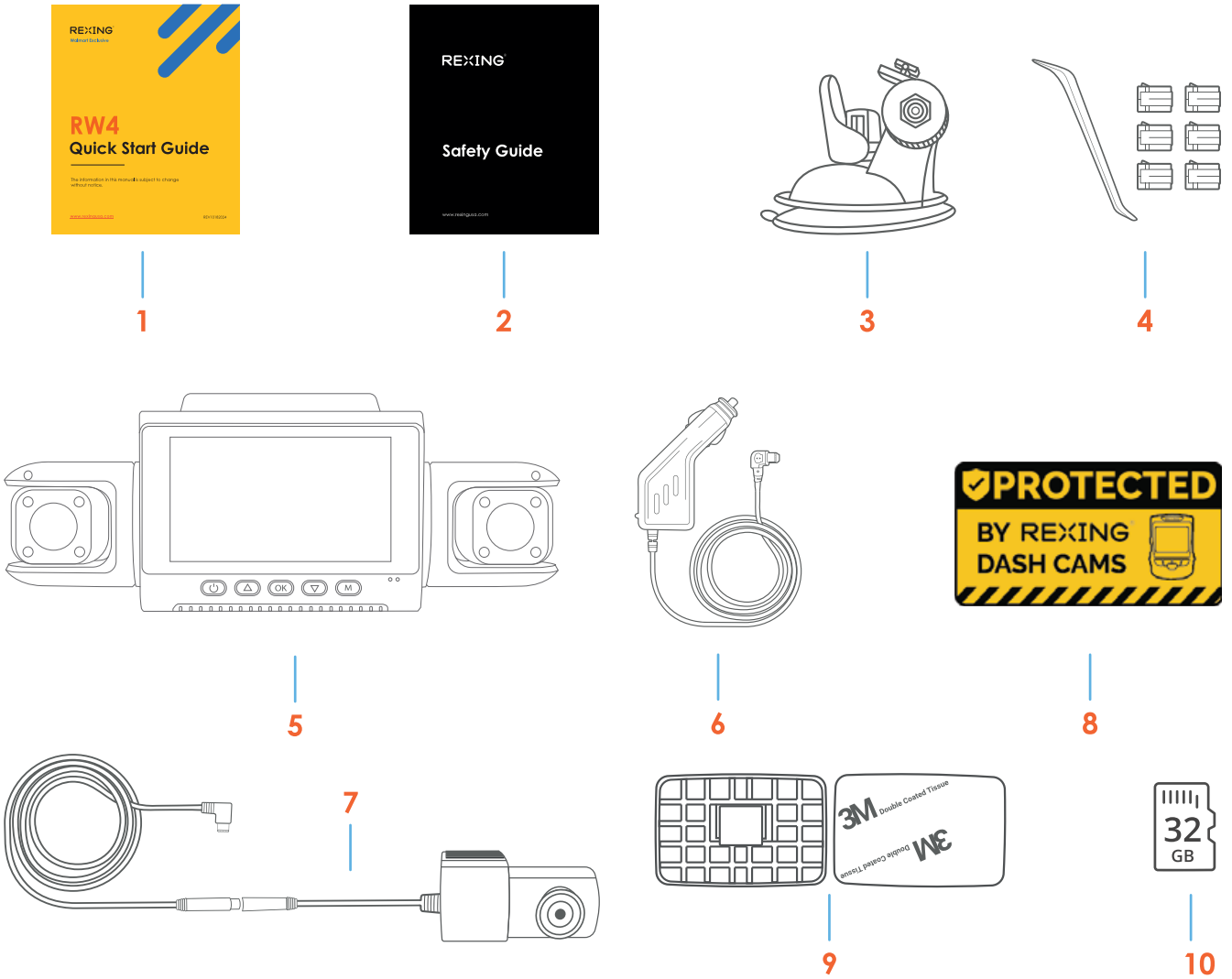

1. RW4 Quick Start Guide
2. Safety Guide
3. Suction Cup Mount
4. Cable Management Tool
5. Rexing RW4 Dash Cam
6. Car Power Connector (12ft)
7. RW4 Rear Camera with Extension Cable
8. Warning sticker
9. 3M Adhesive Mount
10. 32g MicroSD Card

Camera Overview

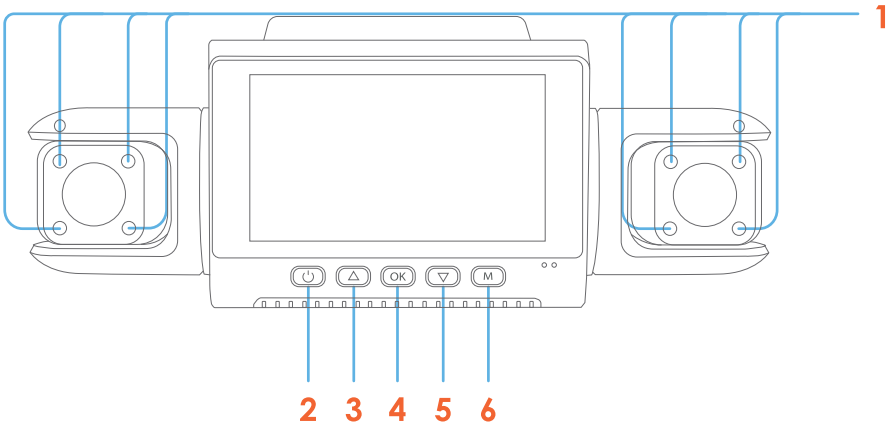

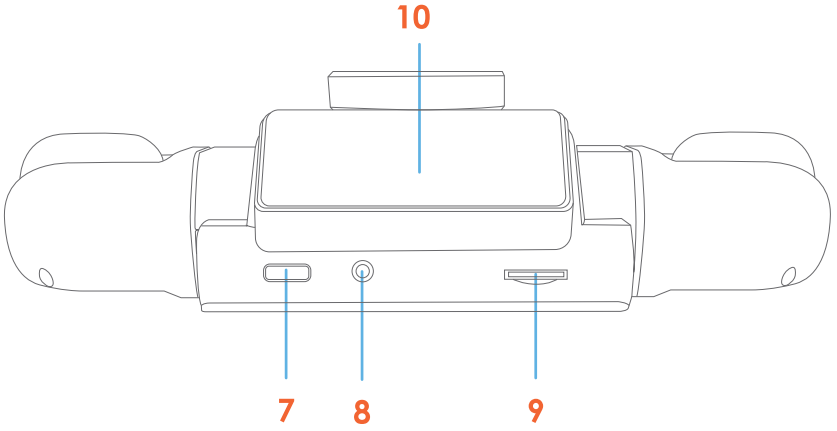

1. 8 IR Lights
2. Power Button / Screen On/Off
3. Up Button / Recording / Take Photo
4. OK (Confirm) Button / Video Lock Button / Wi-Fi Button
5. Down Button/ Screen Toggle Button / Mic Button
6. Menu Button / Playback Button
7. Charger/ Type C Port
8. Rear Camera Port
9. Micro SD Card Slot
10. Mounting Area

Screen Icons

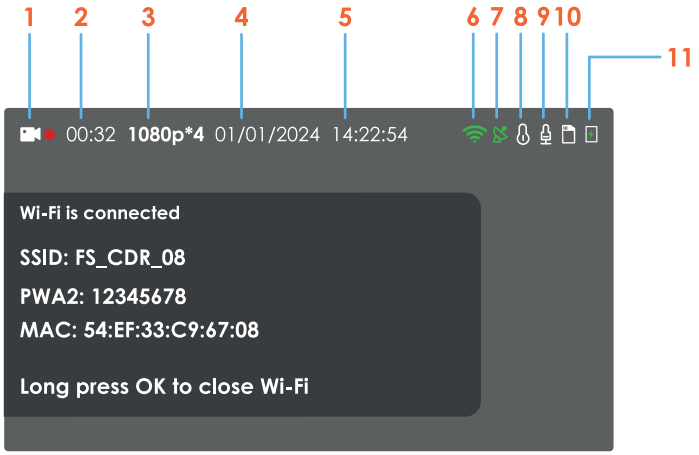

1. Recording (on)
2. Recording Time (current clip)
3. Video Resolution
4. Current Date (MM/DD/YYYY)
5. Time (24h)
6. Wi-Fi (connected)
7. GPS Signal (connected)
8. Current video file locked
9. Audio Recording (on)
10. Memory Card (Inserted)
11. Battery Charging

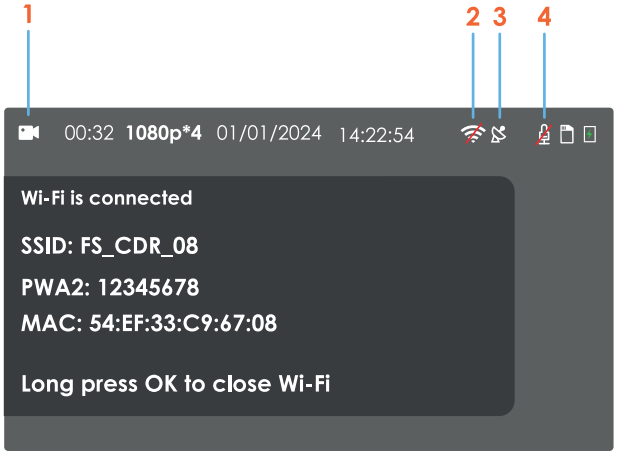

1. Recording (off)
2. Wi-Fi (not connected)
3. GPS Signal (Searching)
4. Audio Recording (off)

Installation

Step 1: Install the Suction Cup Mount and Dash Cam

Remove the protective plastic from the suction cup, clean the mounting area of the windshield with rubbing alcohol, and wipe dry with a lint free cloth. Now, clean the back of the suction cup with rubbing alcohol and wipe dry with a lint free cloth. Next, apply moisture to the suction cup to create a better seal and mount the suction cup to the windshield as shown below and **wait approximately 30 minutes** for it to dry. Once dry, attach the device by fitting the tab on the top of the mount into the slot on the top of the device.

Wait at least 20 minutes before mounting the camera.

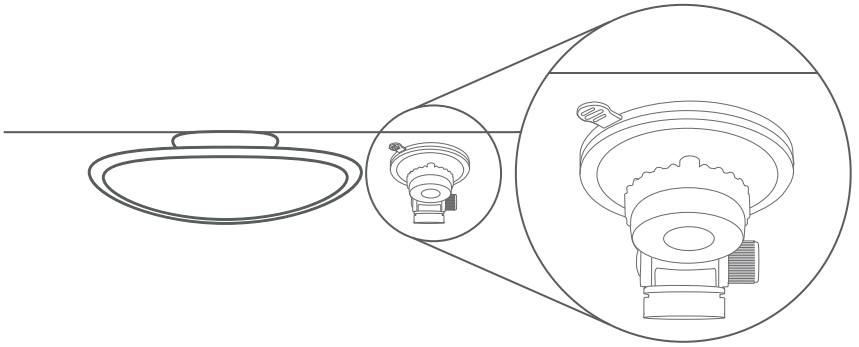

Orient the mount as shown

Step 2: Insert the memory card

The Rexing RW4 accepts **Class 10/UHS-3 or higher** Micro SD memory cards up to 256GB. You will need to insert a memory card before begin recording. **Before inserting or removing a memory card, first ensure you've powered down the device.** Gently push the memory card in until you hear a click, and allow the spring release to push the card out.

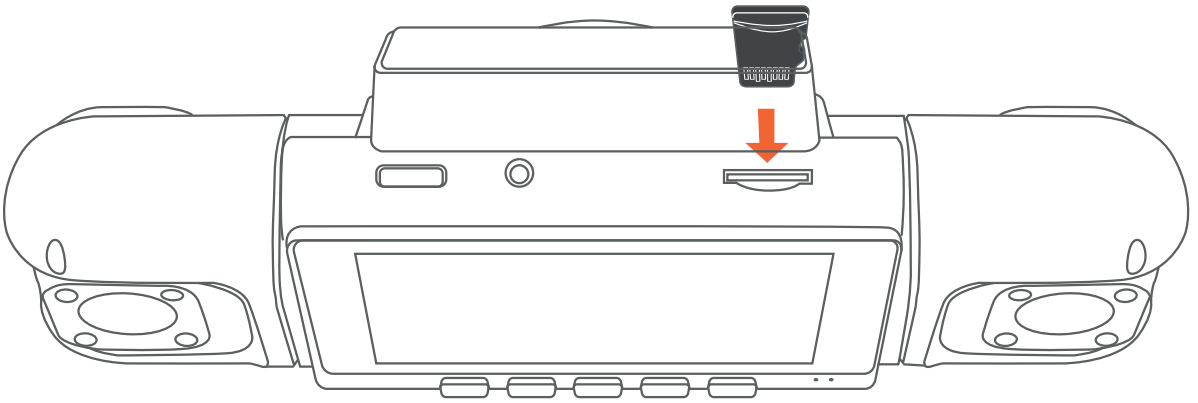

Step 3: Power on the Camera and Format the Memory Card

Power the camera by connecting the charger to the car cigarette lighter and camera. **Before you start using a new memory card, you MUST format the card within the camera using the format function.** Always backup important data stored on the memory card before formatting.

To format the memory card, make sure you have inserted your memory card, then turn on the device by connecting to a power source. Press ⊙/◁ to stop recording. Then press the **MENU** button twice to enter the Menu.

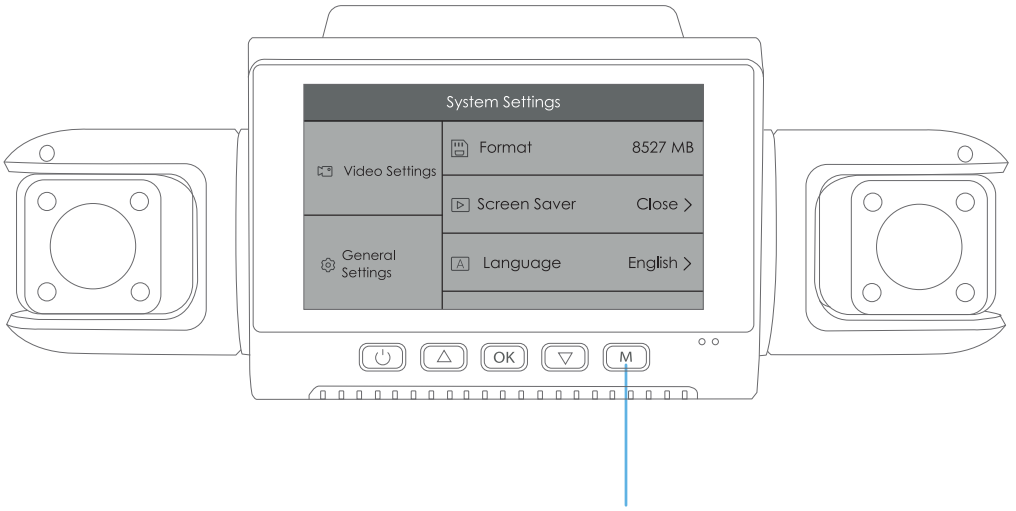

Press the Menu button twice and toggle down to **Format**

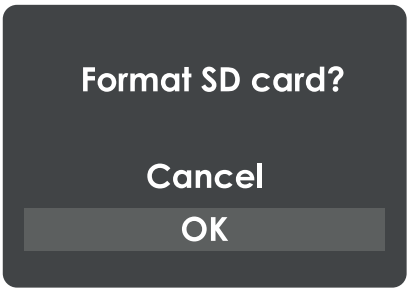

Press the **OK** button to confirm formatting the card

Use the **UP** and **DOWN** navigation buttons and go to the Format setting. Press the **OK** button to confirm the selection. You may now disconnect from power. The camera will shut down after 3 seconds. The camera should begin recording automatically the next time it is powered on.

Step 4: Mount the Rear Camera

Mount the rear camera as shown below. Use rear camera cable to connect the rear camera to the RW4 camera.

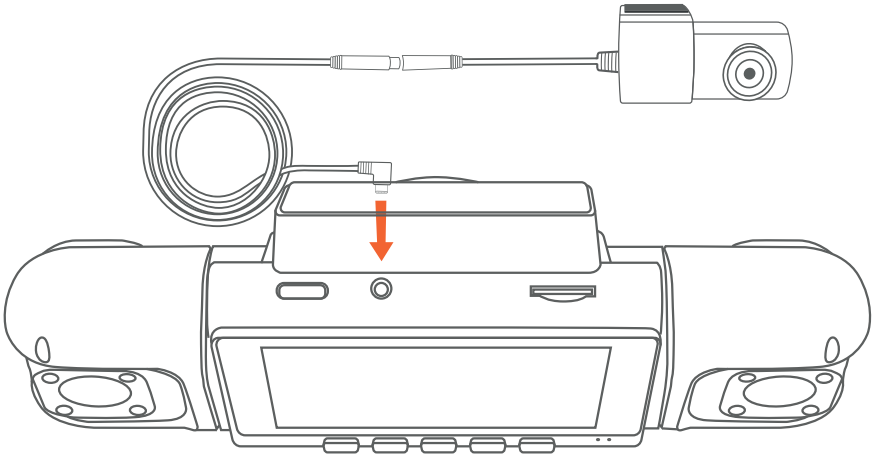

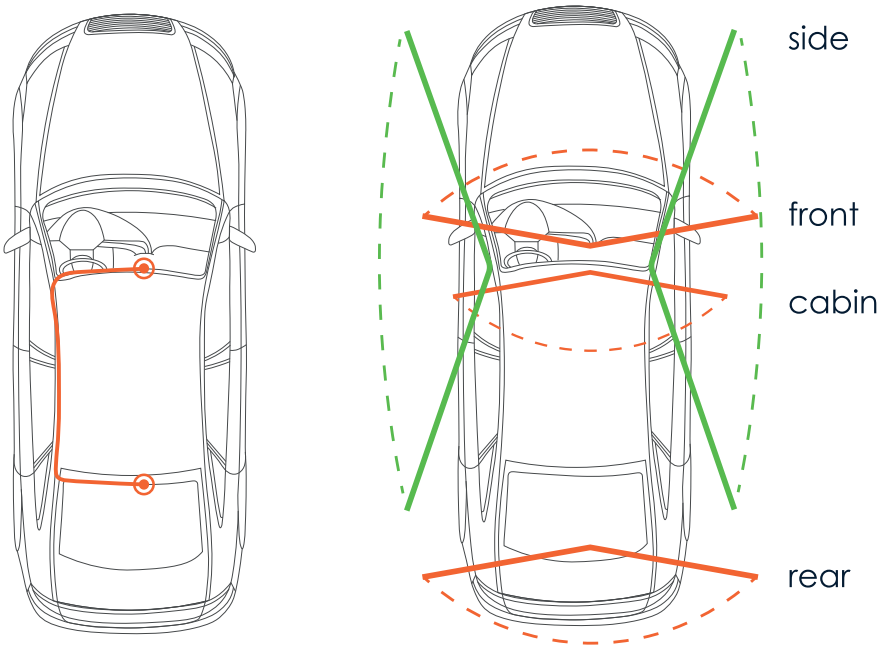

Step 5: Installing the Camera onto the Windshield

Place the camera on the mount and carefully route the power cable around the windscreen and tuck in under the trim.

Plug the Car Charger Cable into a 12V DC power outlet or the car cigarette lighter. Connect car charger to the camera. The camera will auto-start recording once powered on.

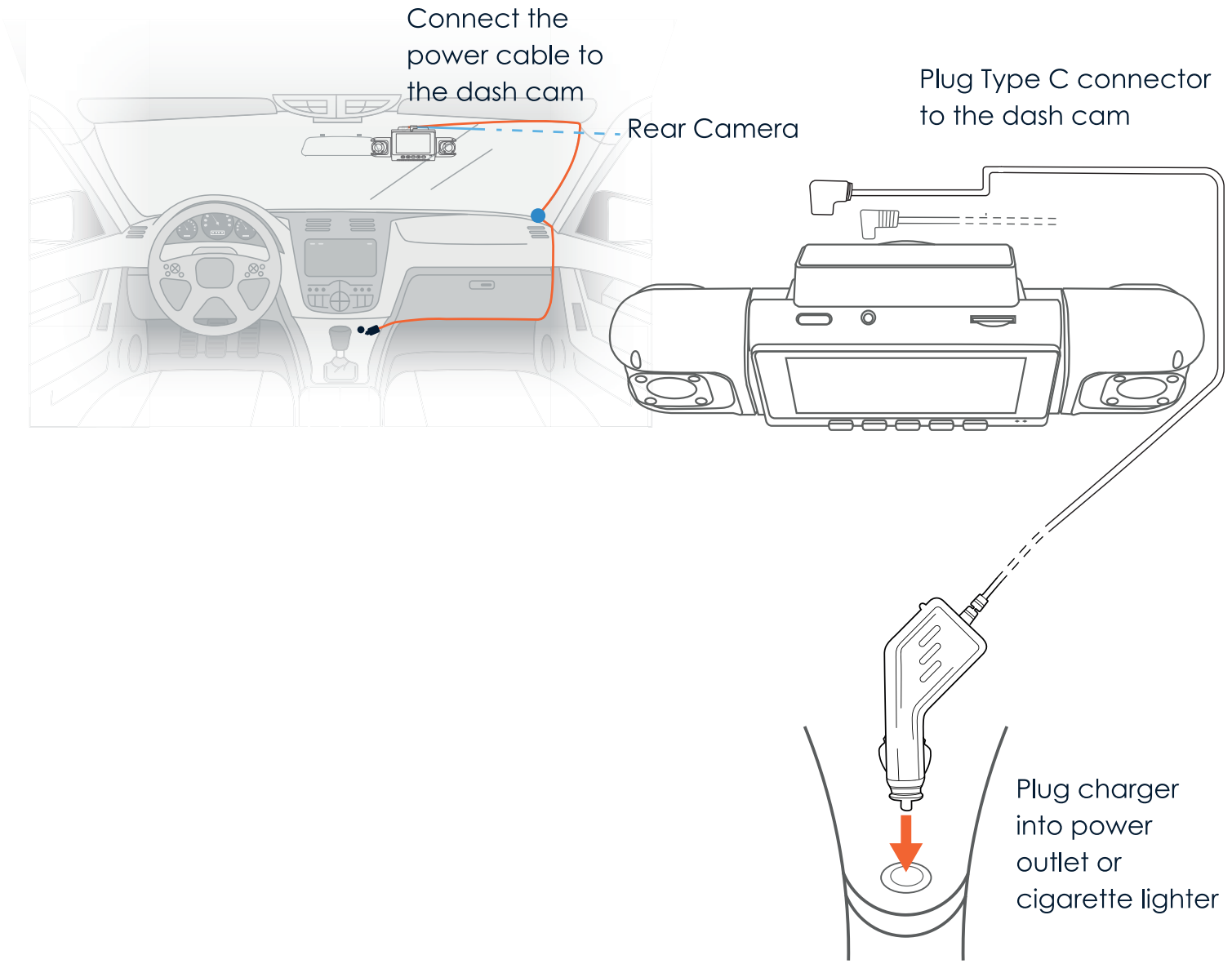

Basic Operation

Device Power

The device will be automatically powered on when plugged into a 12V accessory socket or cigarette lighter when receives a charge (i.e. the vehicle is started).

To turn the device on manually, press and hold the **Power** button until the welcome screen appears.

The camera will automatically start recording when it's powered on.

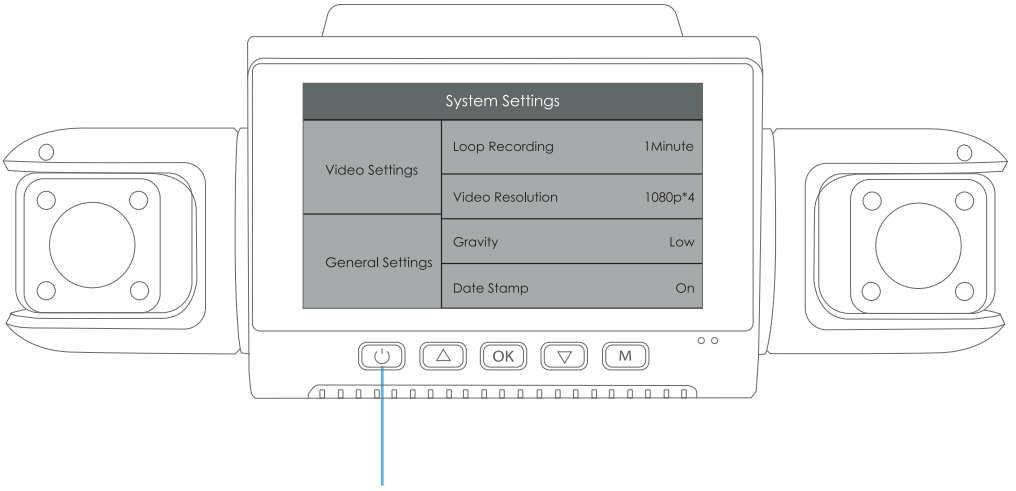

Press and hold the **Power** button to turn the device on manually

Menu Settings

Power on the camera. If the camera is recording, press the button to stop recording.

Hold the **MENU** button and toggle to the desired mode.

Press the **MENU** button once to enter the Video Settings.

Press the **MENU** button twice to enter the Setup Settings.

Video Recording

The camera will automatically start recording when the device receives a charge. The LED lights and red dot will blink red device when recording. Press the **OK** button to stop recording.

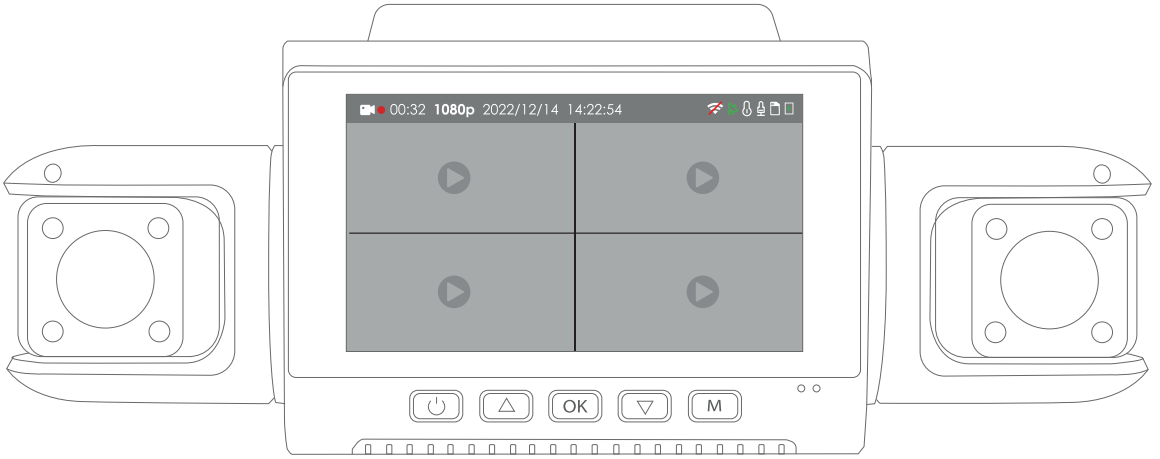

Video Playback

Playback of videos can be done on the device or a computer. To playback a video on the device, hold **MENU** button and toggle to the Playback mode. Use the **UP** and **DOWN** navigation buttons to toggle to the desired video. Press the **OK** button to play.

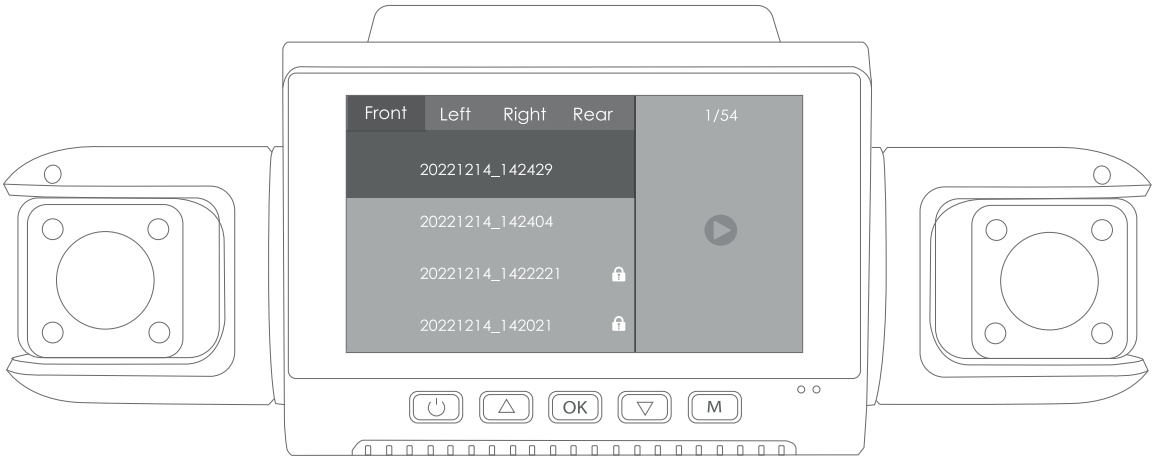

During playback, use the **OK** (pause), **UP** (rewind) and **DOWN** (fast forward) buttons to control the video playback.

To playback a video using an SD card adapter, remove the memory card and insert it into an SD card adapter. Place the adapter in the computer. Then place the adapter into the computer.On the computer, navigate to device drive. Then select the video to playback.

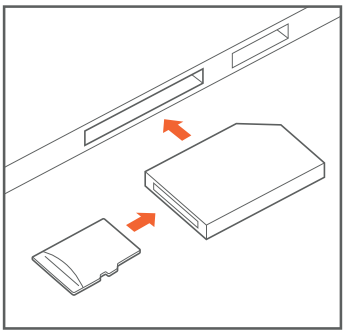

Wi-Fi Connect

Step 1:

With your dash cam powered on, hold the **OK** navigation button to enable the Wi-Fi function. The Wi-Fi name (aka the SSID and password for the dash cam should be displayed on-screen.

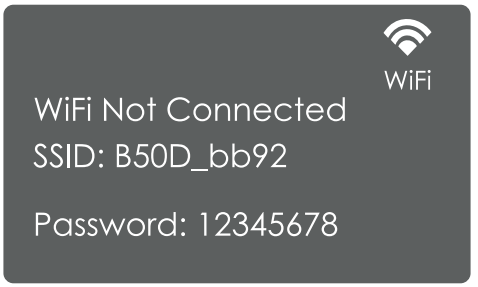

Step 2:

On your mobile device, navigate to your Wi-Fi settings. Connect to your dash cam's Wi-Fi by tapping its name when it appears. Enter your dash cam's Wi-Fi password if you are prompted to do so.

Note: On same mobile devices, you may have to try to connect more than once. To ensure you've successfully connected, your mobile device's screen

Samsung / Android Example

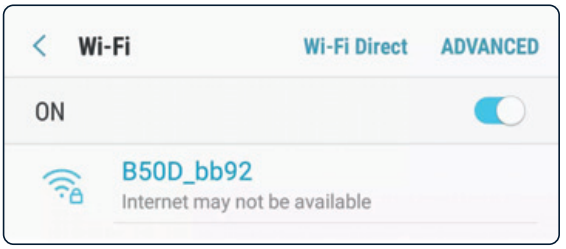

iPhone / iOS Example

Step 3:

Once you're connected to the dash cam, open the Rexing Connect app on your mobile device.

Please select "Keep Trying Wi-Fi" if you see the notification on the right.

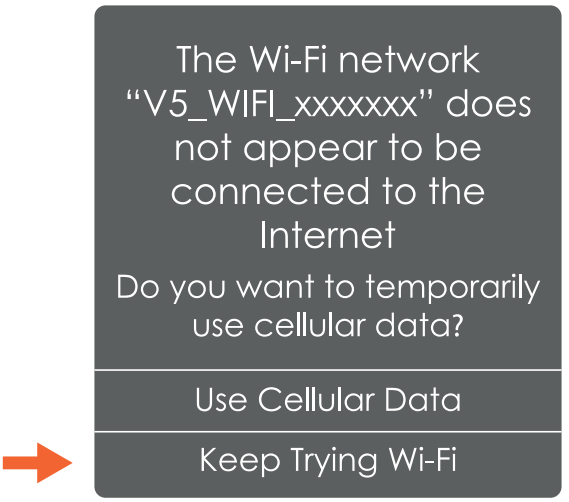

Step 4:

In the app, hit the "Connect" button to connect to your dash cam, allowing you to access live view and view/download your recordings.

Note:

Hold to the **OK** button for 2 seconds to disconnect the

Rexing Connect App

Easily download the app by scanning the QR code below or search via the App Store or Google Play

Download on the App Store

GET IT ON Google Play

Wi-Fi Connect Troubleshooting

If you bring up the Rexing Connect app and cannot connect your phone to the dash cam please go to **https://www.rexingusa.com/wifi-connect/** OR scan the QR code below.

GPS Logger

To activate the GPS logger feature, you'll need to connect the GPS Logger, GPS Charger or the GPS Smart Hardwire Kit (Sold Separately).

The GPS logger will record the speed and location of your vehicle as you drive.

You can then access these information while playing back your recordings using the GPS Video player. For windows and Mac, available at **https://www.rexingusa.com/support/rexing-apps/**

The dash cam will automatically search for the GPS signal once it's connected to the power source. Press the **MENU** button once and go to Video Settings. Toggle the GPS setting, and select your favorite speed unit.

After a GPS signal is found, the screen icon will turn from **not connected** to **active** - as per the below icons.

GPS Signal Searching

GPS Signal Active

GPS Date-Time Troubleshooting

If your dash cam GPS date and time are incorrect please go to **https://www.rexingusa.com/gps-date-time/** OR scan the QR code below.

Parking Monitor (Parking Surveillance Mode)

Parking monitor provides surveillance on your parked vehicle. When the engine is off, the hardwire kit is used to provide continuous power and protect your car battery from being discharged.

Option 1: Vibration Detection

To enable the Parking Monitor, you'll need to connect it with a Rexing Type-C GPS Smart Hardwire Kit or Type-C Smart Hardwire Kit (sold separately).

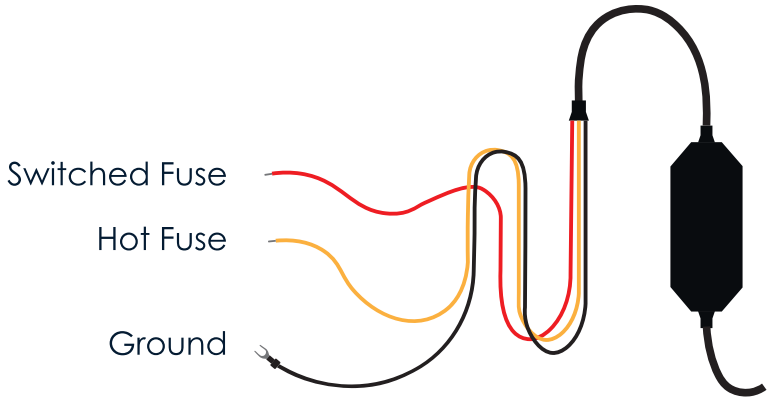

This feature will allow the dash cam to switch to parking mode automatically if the vehicle's engine turns off and switch back to the normal recording after the vehicle's engine turns on.

Gravity Sensing Record:

The Gravity Sensing detects significant or sudden movement (such as an impact or collision), it will trigger an event recording. We suggest setting the "Gravity Sensing" to High sensitivity for Parking Mode Recording.

Note:

If you do not use the parking mode function, please change the Gravity Sensing sensitivity to low. Otherwise, the video will easily be locked and the video cannot be deleted by the loop recording function. This will cause the memory card to be full of locked videos and cause the recorder to fail to work normally.

Please **DO NOT ENABLE** the Parking Monitor function in the settings of the dash cam **WITHOUT** connecting a Type-C GPS Smart Hardwire Kit or Type-C Smart Hardwire Kit . They may cause a malfunction.

We kindly suggest taking a moment to watch our tutorial video. It's designed to help you have a smooth and successful installation experience. We believe you'll find it very helpful!

Please go to **https://www.rexingusa.com/ihwkinstall** or scan QR code

Warranty & Support

Warranty

The Rexing RW4 Dash Cam comes with a full 12-month warranty. If you register your product on our official site (https://www.rexingusa.com/support/registration), you can extend the warranty to 18 months.

Support

If you have any questions regarding your product, please do not hesitate to contact us at care@rexingusa.com, or call us at (877) 740-8004. Queries are typically answered within 12-24 hours.

Your opinion matters

Rexing is firmly committed to always improving our products, services, and user experience. If you have any thoughts on how we can do even better, we welcome your constructive feedback and suggestions.

Connect with us today at care@rexingusa.com

Thank you for choosing Rexing!

FCCID: 2AW5W-RW4

This device complies with part 15 of the FCC Rules. Operation is subject to the following two conditions: (1) This device may not cause harmful interference, and (2) this device must accept any interference received, including interference that may cause undesired operation.

Changes or modifications not expressly approved by the party responsible for compliance could void the user's authority to operate this equipment.

REXING®

MADE IN CHINA

FCC Warnning:

This equipment has been tested and found to comply with the limits for a Class B digital device, pursuant to part 15 of the FCC Rules. These limits are designed to provide reasonable protection againstharmful interference in a residential installation. This equipment generates, uses and can radiateradio frequency energy and, if not installed and used in accordance with the instructions, maycause harmful interference to radio communications. However, there is no guarantee thatinterference will not occur in a particular installation. If this equipment does cause harmfulinterference to radio or television reception, which can be determined by turning the equipmentoff and on, the user is encouraged to try to correct the interference by one or more of thefollowing measures:

- Reorient or relocate the receiving antenna.
- Increase the separation between the equipment and receiver.
- Connect the equipment into an outlet on a circuit different from that to which the receiver is connected.
- Consult the dealer or an experienced radio/TV technician for help.

Caution: Any changes or modifications to this device not explicitly approved by manufacturer could void your authority to operate this equipment.

This device complies with part 15 of the FCC Rules. Operation is subject to the following two conditions:

(1)This device may not cause harmful interference, and (2) this device must accept any interference received, including interference that may cause undesired operation.

This equipment complies with FCC radiation exposure limits set forth for an uncontrolled environment. This equipment should be installed and operated with minimum distance 20cm between the radiator and your body.