NE6037

Quick Installation Guide

DOCSIS 3.1 Cable Modem

Package Content

- NE6037 x 1
- Power Adapter x 1
- Ethernet Cable x 1
- Quick Installation Guide x 1

Installation Instructions

- Position the device vertically on a stable surface, ensuring the foot stand is properly attached.
- Install the unit near a power outlet so that the AC adaptor can be used without stressing the and it can be easily connected to a power outlet. Observe the maximum load of the electrical outlet.
- Connect the device according to the installation instructions in Figure 3.

Figure 1:

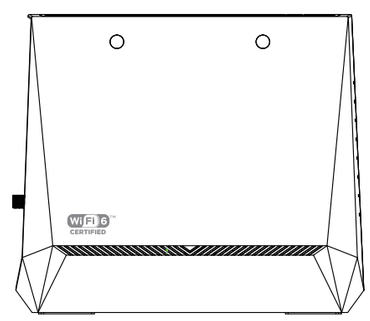

Figure 2:

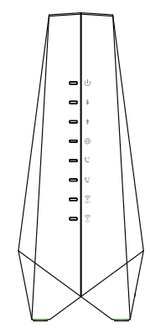

Figure 3:
Connection Diagram

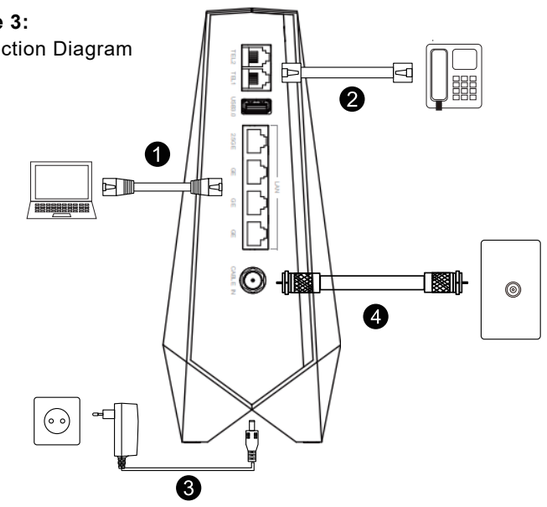

① Connect your computer to one of the Ethernet ports.

② Connect your phone to the 1 port. A second device (phone, fax, answering machine) can be connected to the 2 port.

③ Connect the round (DC) connector to the plug on the modem, and the power adaptor into the wall outlet, to power up the device.

④ Connect one end of a 75 ohm coaxial cable to the RF cable port. Connect the other end to the cable wall outlet.

封面

封底

Physical

Items	Features
Operating Temperature	0 to 40 ℃
Operating Relative Humidity	10-90% (Non condensing)
Operating Relative Humidity	-40 to 70℃
Dimensions (L x D x H)	255*90.5*221.5mm
LED	POWER, US, DS, ONLINE, 2.4G, 5G, TEL1, TEL2, WPS

Interfaces

Items	Features
RF Interface	External 'F' type connector
Data Interfaces	3 x 10/100/1000 Base-T Ethernet (RJ-45 connector) 1 x 10/100/1000/2500 Base-T Ethernet(RJ-45 connector) 1 x USB P
Analog Telephony Interface	2 lines, RJ-11
Input Voltage	100~240VAC, 50/60 Hz

Wireless

	Features
Wireless Frequency Range	2.4GHz(2.4~2.4835GHz) and 5GHz(5.15~5.85GHz)
Data Rate (Max.)	2.4G(4x4): 1148Mbps 5G(4x4): 4804Mbps
Bandwidth of channel	20, 40, 80 MHz and 160MHz
Wireless Modulation Type	BPSK, QPSK, 16QAM, 256QAM,1024QAM

RF Downstream

Items	Features
Channels	32 DOCSIS 3.0 QAM single-carrier channels; 2 OFDM channels
Tuner Configuration	Full capture tuning range
Frequency Range	108-1218 MHz or 258-1218 MHz
RF Input Sensitivity Leve	-15 to +15 dBmV
Modulation Type	DOCSIS3.0 64, 256, 1024, 2048 DOCSIS3.1 4096 QAM

RF Upstream

Items	Features
Bonded Channels	8 DOCSIS 3.0 QAM single-carrier channels; 2 OFDM-A channels
Frequency Range	5-85 MHz or 5-204 MHz
RF Output Level	+57 dBmV (32QAM and 64QAM, single upstream) +54 dBmV (32QAM and 64QAM, 4-8 upstreams) +58 dBmV (8QAM and 16QAM, single upstream) +56 dBmV (SCDMA, single upstream) +53 dBmV (SCDMA, 2-8 upstreams)
Modulation Type	DOCSIS3.0 QP SK, 8QAM, 16QAM, 32QAM, 64QAM and 128QAM (en S-CDMA) DOCSIS3.1 4096 QAM

FCC Statement

This equipment has been tested and found to comply with the limits for a Class B digital device, pursuant to part 15 of the FCC Rules. These limits are designed to provide reasonable protection against harmful interference in a residential installation. This equipment generates, uses and can radiate radio frequency energy and, if not installed and used in accordance with the instructions, may cause harmful interference to radio communications. However, there is no guarantee that interference will not occur in a particular installation. If this equipment does cause harmful interference to radio or television reception, which can be determined by turning the equipment off and on, the user is encouraged to try to correct the interference by one or more of the following measures:

— Reorient or relocate the receiving antenna.
— Increase the separation between the equipment and receiver.
— Connect the equipment into an outlet on a circuit different from that to which the receiver is connected.
— Consult the dealer or an experienced radio/TV technician for help.

FCC Radiation Exposure Statement

This device complies with FCC radiation exposure limits set forth for an uncontrolled environment. This equipment must be installed and operated in accordance with provided instructions and the antenna(s) used for this transmitter must be installed to provide a separation distance of at least 20 cm from all persons.

This device complies with Part 15 of the FCC Rules. Operation is subject to the following two conditions:
(1) this device may not cause harmful interference, and
(2) this device must accept any interference received, including interference that may cause undesired operation.

Caution!

Any changes or modifications not expressly approved by the party responsible for compliance could void the user's authority to operate the equipment.
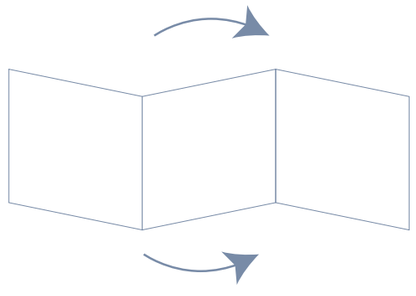
折叠方式示意图