MaeGo

Users Manual v1.0

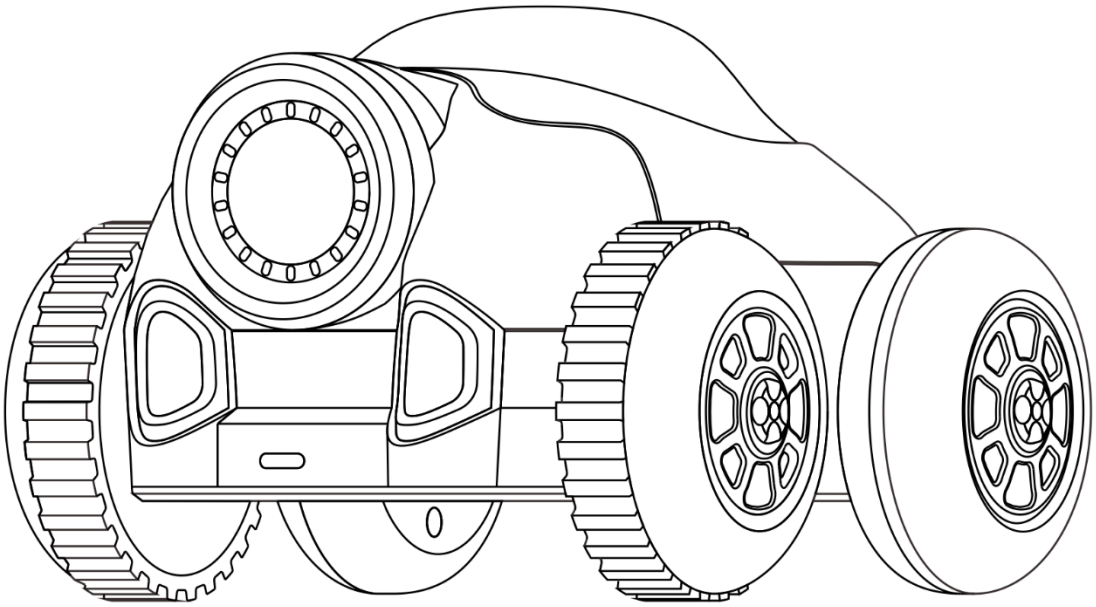

Contents

1 Warning 3

2 Overview 4

3 Diagram 5

4 Specifications 6

4.1 Robot 6

4.2 IR Blaster 7

5 Usage 8

5.1 IR blaster Battery Installation 8

5.2 IR Blaster Load 8

5.3 Robot Power On / Off 9

5.4 Game Mode 9

5.4.1 Place obstacles 9

5.4.2 Vision Marker 10

5.4.3 Start Game 11

5.4.4 LED Indicator 11

5.4.5 Switch IR blaster Bullet mode 12

5.5、Coding Mode 12

5.5.1 Python Coding 12

5.5.2 Blockly Coding 13

5.6 upgrade 16

5.7 Charging 17

1 Warning

1.1、Do not immerse the product or any part in water or any other form of liquid

1.2、Do not drop, throw, or kick MaeGo and IR blaster as this may damage mechanical functions.

1.3、Do not allow MaeGo to roam freely or leave unattended near edges from which MaeGo could fall.

1.4、Do not allow MaeGo to work outdoor, cause the Lidar cannot work in sunshine.

1.5、It's recommended using MaeGo on a smooth surface.

2 Overview

MaeGo is the world’s first AI robot car that runs, stops, turns and performs preset tasks autonomously to play FPS games with you in reality.

You can shoot infrared rays using the included guns or foam balls/darts from Nerf blasters at them in a multiplayer battle, having fun for hours with your families and friends.

MaeGo is more than an AI robot for shooting games, but also a coding platform to cultivate children's logic and strategic thinking and prepare them for school and future careers in STEM.

3 Diagram

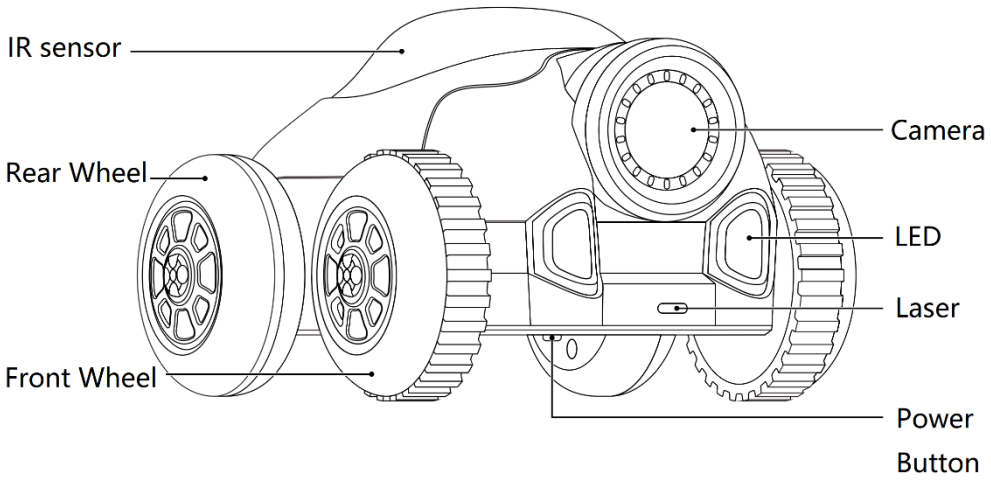
IR sensor
Rear Wheel
Front Wheel
Camera
LED
Laser
Power
Button

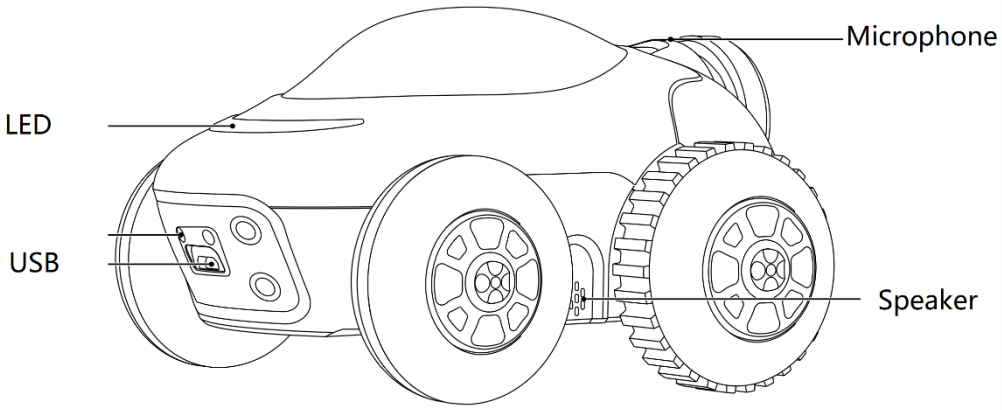
LED
USB
Microphone
Speaker

4 Specifications

4.1 Robot

Wize	150×114×82 (mm)
Weight	360g
Camera	Yes
Processor	Quadcore ARM Cortex-A35@1.3GHz
Controller	ARM CORTEX-M4@120MHz
Lidar	Yes
IMU	Yes
IR	Yes
Microphone	Yes
Speaker	Yes
Battery	3.8V 1100mAh LiPo
Charger	USB
Running time	About 30 minutes
Charging time	About 60 minutes
Max speed	2m/s
WiFi	Yes
Coding	Pyhton,Blockly
Upgrade	OTA

4.2 IR Blaster

Size	176×132×40(mm)
Weight	160g (w/o battery)
IR	Yes
Max distance	10m
Speaker	Yes
LED	Yes
Battery	1.5V AAA×2 (Not Included)
Auto power off	Yes
Ejecting Magzine	Yes

5 Usage

5.1 IR blaster Battery Installation

2 AAA battery is needed for IR blaster

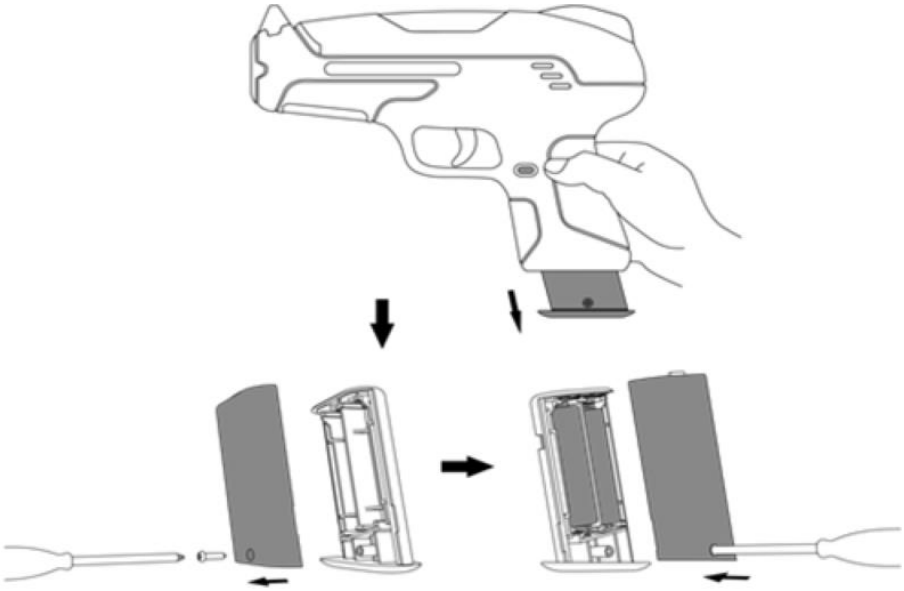

5.2 IR Blaster Load

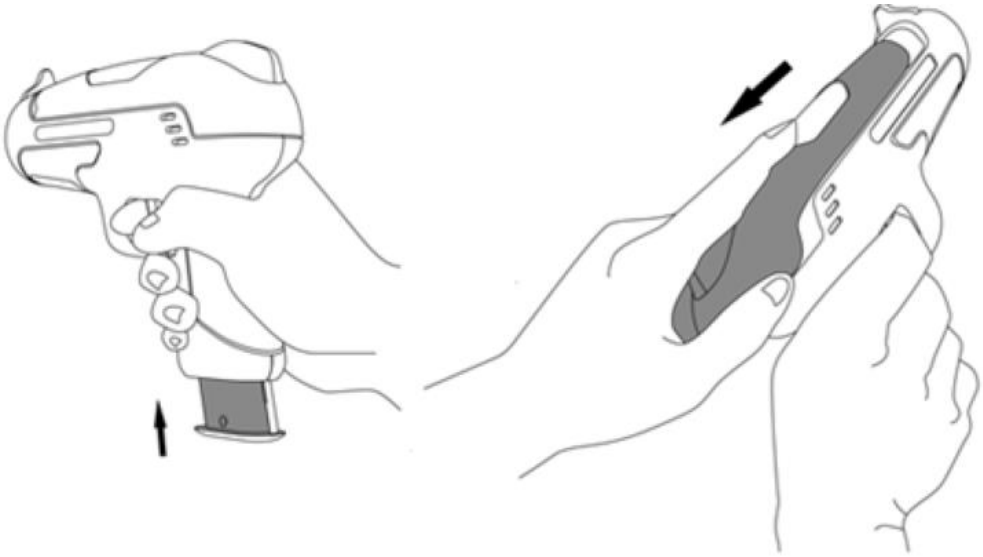

tips: ten bullets each load

5.3 Robot Power On / Off

Power on: press power button 1s

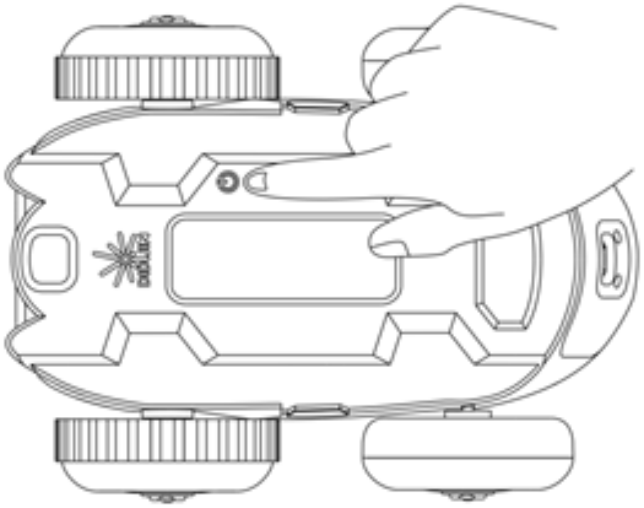

Power off：press power button 3s

Force power off：press power button 8s

tips：LED is solid yellow during power up.

The time for system boot up is about 15s

5.4 Game Mode

5.4.1 Place obstacles

In the game mode, you can place some obstacles in the field to increase the fun of the game.

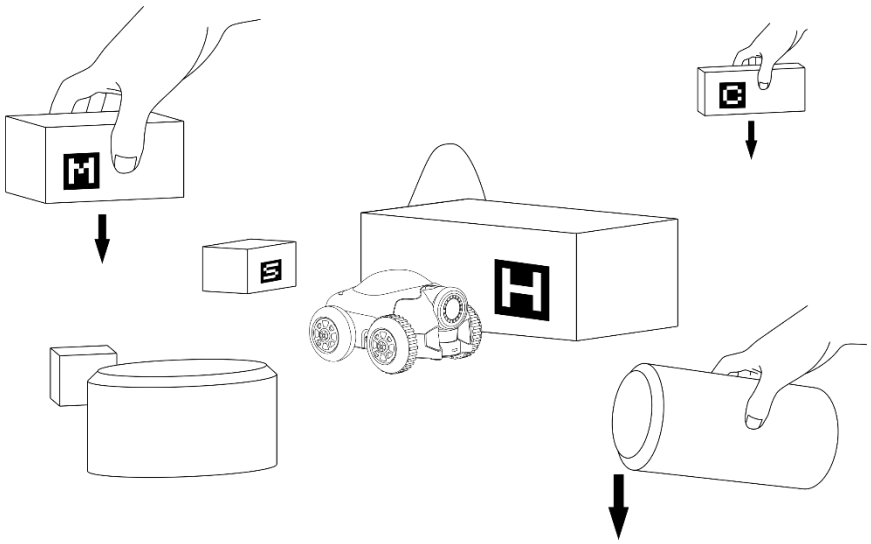

5.4.2 Vision Marker

Place April tag on the obstacle for MaeGo vision recognition to nincrese the fun of the game. Different tag present different function.

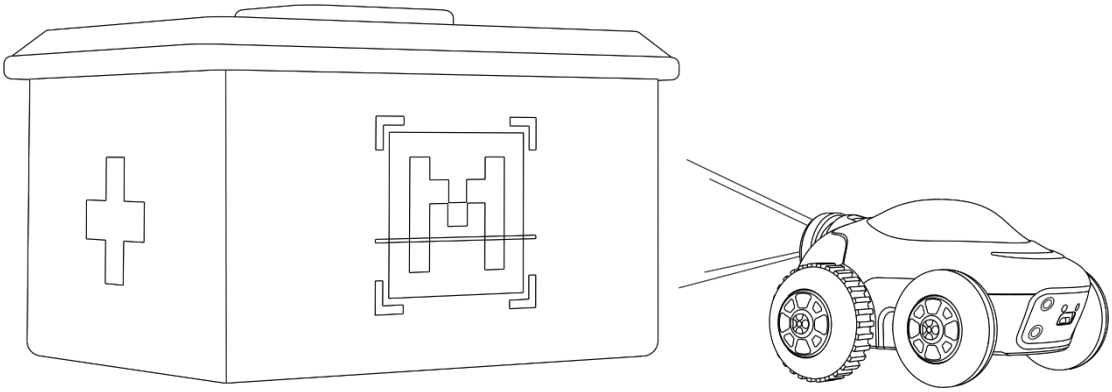

5.4.3 Start Game

shoot at the red semitransparent part on the top of robot by IR blaster can start the target shooting game.

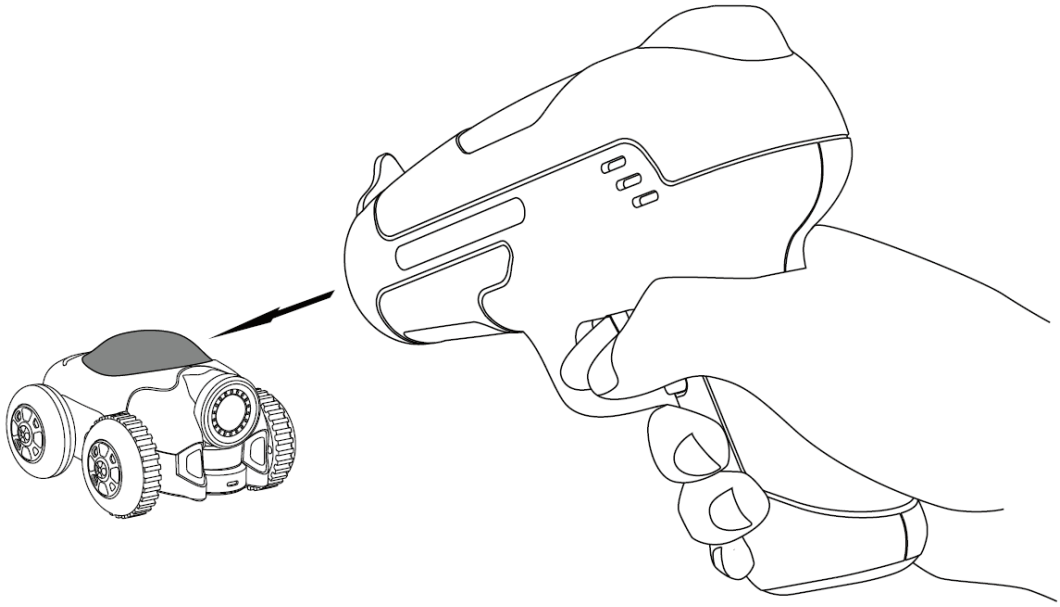

5.4.4 LED Indicator

mode	color		status	notes
Mode switch	red		Blink 4 times	Swith to game mode
	green		Blink 4 times	Switch to coding mode
game	front	green	blink	Hp enough
		red	blind	Hp is not enough
	rear	Red/green	Blink 1 time	Be shot

5.4.5 Switch IR blaster Bullet mode

5.5、Coding Mode

5.5.1 Python Coding

5.4.1.1 download Python coding software on PC

Windows version：

Ubuntu version：

Notes: windows 7+ or ubuntu 16.04+ is required to install MaeGo Python.

5.5.1.1 connect PC to MaeGo’s WiFi Access Point

open internet access menu on the computer and connect to MaeGo’s WiFi access point MaeGo_xxxxxx(xxxxx is different on different product)；

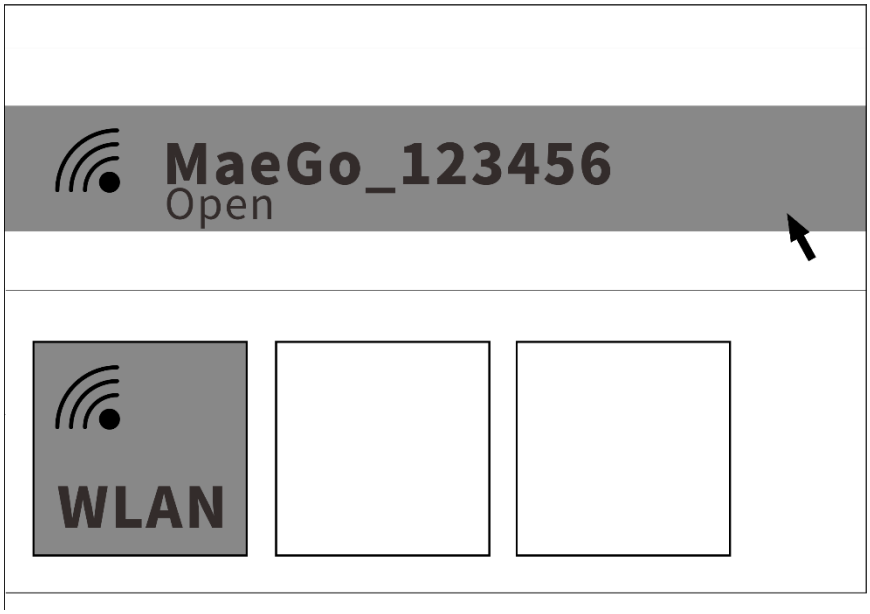

5.5.1.2 MaeGo Python

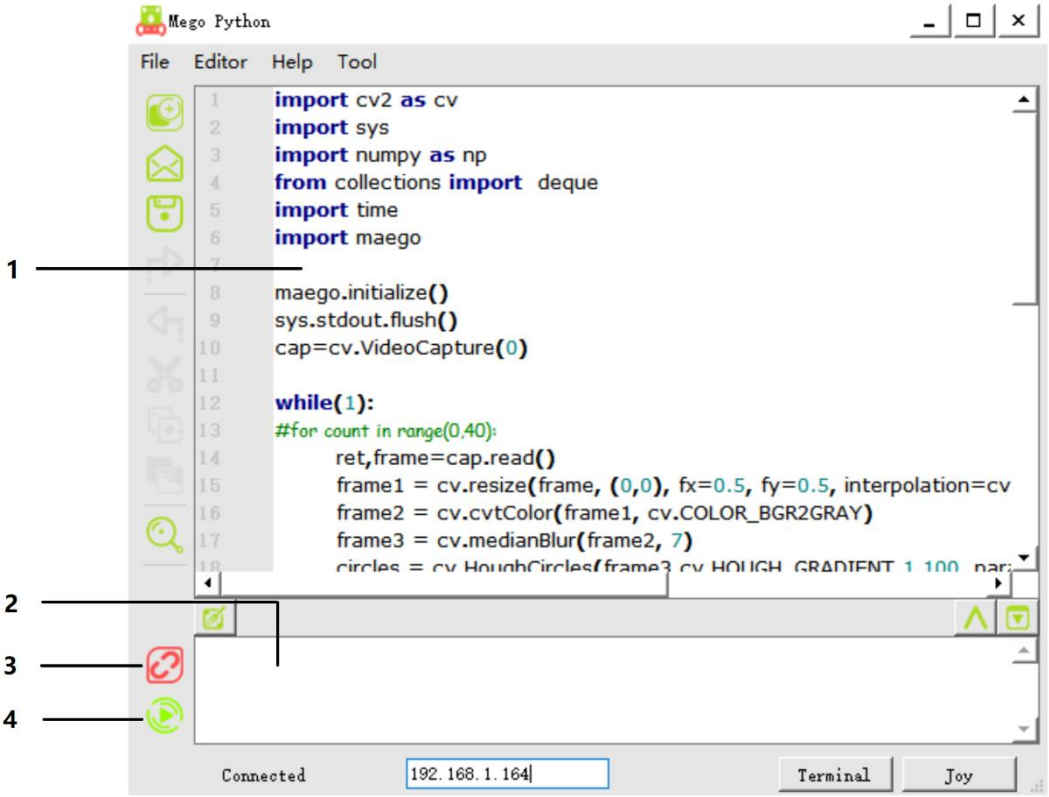

1: code edit

2: log display

3: connect / disconnect to MaeGo

4: run code

5.5.2 Blockly Coding

5.5.2.1 Connect Smart Phone to MaeGo’s WiFi

5.5.2.2 MaeGo APP

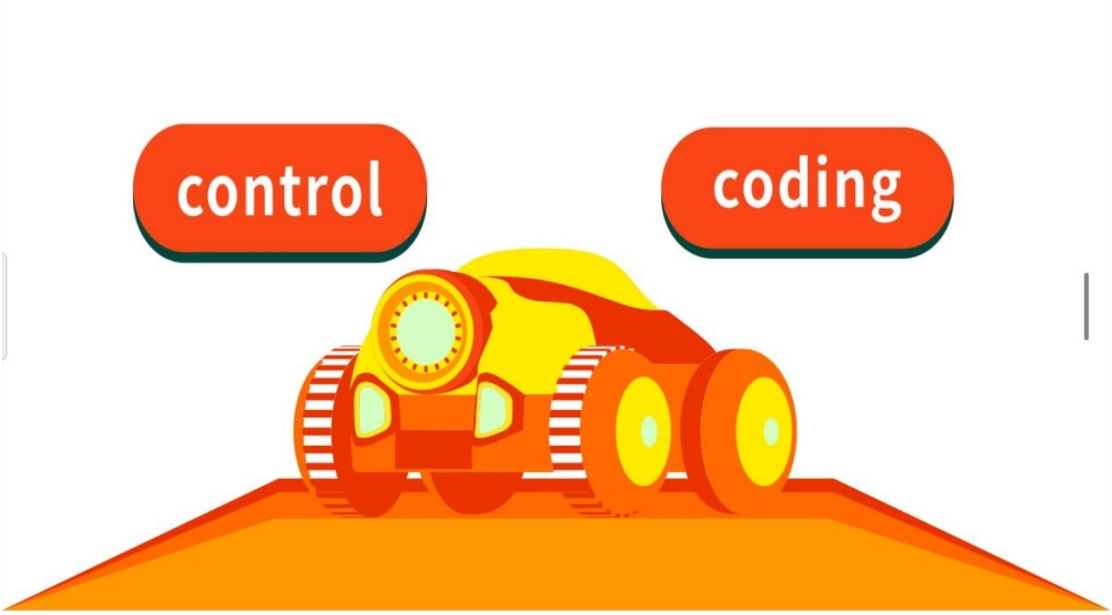

5.5.2.3 Blockly

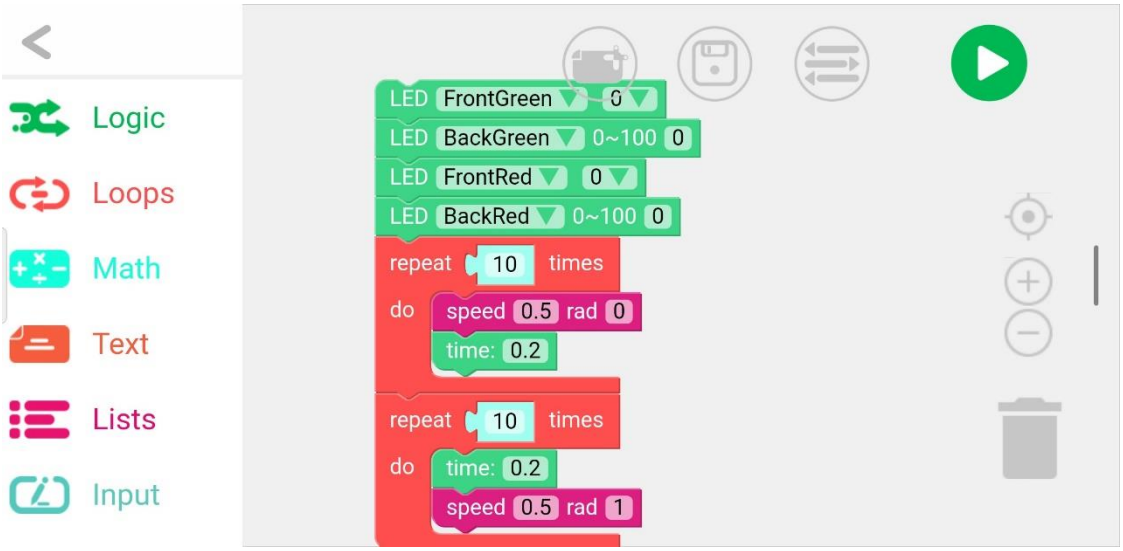

5.5.2.4 FPV control

Control function of APP can FPV control the MaeGo.

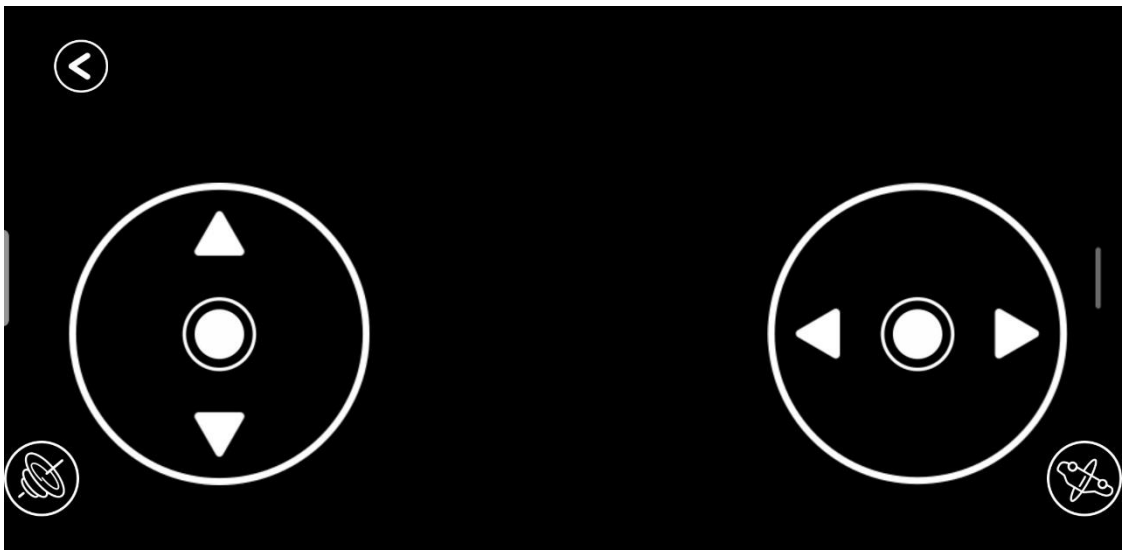

1：forward / backward

2：turn left / turn right

5.5.2.5 Settings

5.6 upgrade

Connect MaeGo to PC by the USB cable attached.

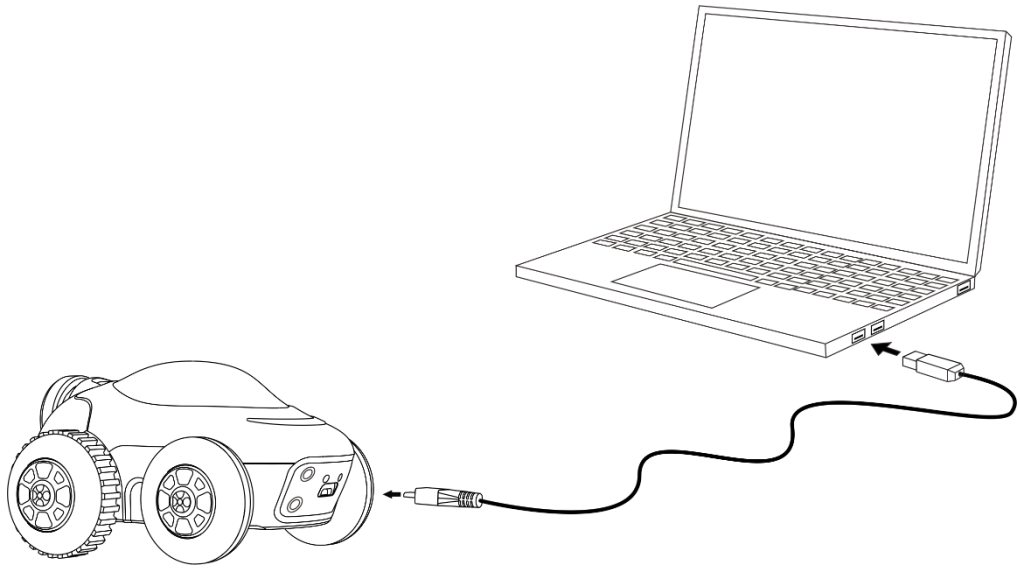

run MaeGo Pytho, and open the upgrade menu;

tips: led blinks yellow means the robot is upgrading.

Warning: The upgrade process cannot go on if the battery is not enough.

5.7 Charging

Connect MaeGo to a usb adapter to charge it.

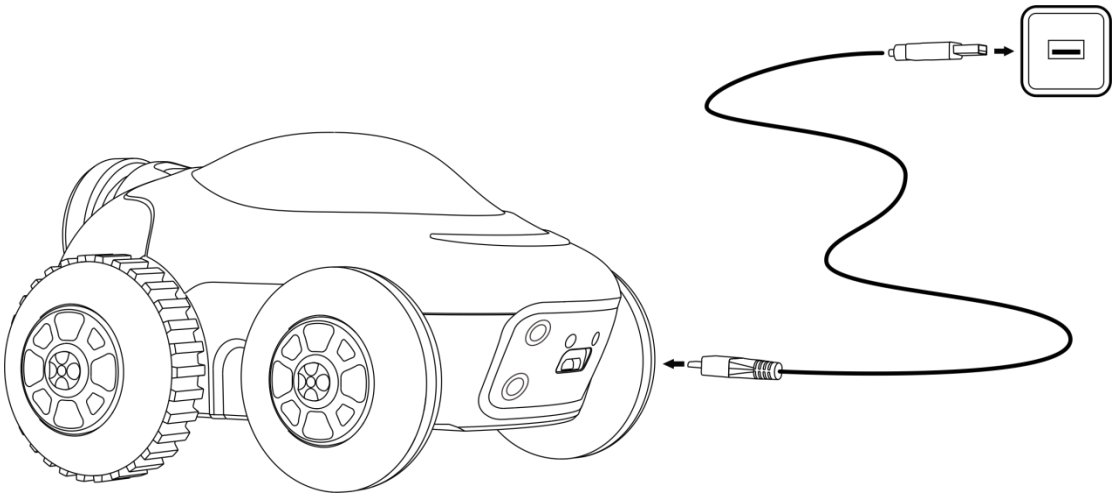

LED status description:

LED red：charging

LED green：full charged

Notes: charger with output current 2A+ is suggested.

FCC Statement

Any changes or modifications not expressly approved by the party responsible for compliance could void the user's authority to operate the equipment.

This device complies with part 15 of the FCC Rules. Operation is subject to the following two conditions: (1) This device may not cause harmful interference, and (2) this device must accept any interferencereceived, including interference that may cause undesired operation.

This equipment has been tested and found to comply with the limits for a Class B digital device, pursuant to part 15 of the FCC Rules. These limits are designed to provide reasonable protection against harmful interference in a residential installation. This equipment generates, uses and can radiate radio frequency energy and, if not installed and used in accordance with the instructions, may cause harmful interference to radio communications. However, there is no guarantee that interference will not occur in a particular installation. If this equipment does cause harmful interference to radio or television reception, which can be determined by turning the equipment off and on, the user is encouraged to try to correct the interference by one or more of the following measures:

—Reorient or relocate the receiving antenna.

—Increase the separation between the equipment and receiver.

—Connect the equipment into an outlet on a circuit different from that to which the receiver is connected.

—Consult the dealer or an experienced radio/TV technician for help.

FCC Radiation Exposure Statement:

This equipment complies with FCC radiation exposure limits set forth for an uncontrolled environment .

This transmitter must not be co-located or operating in conjunction with any other antenna or transmitter.

This equipment should be installed and operated with minimum distance 20cm between the device and your body.