ISUZU

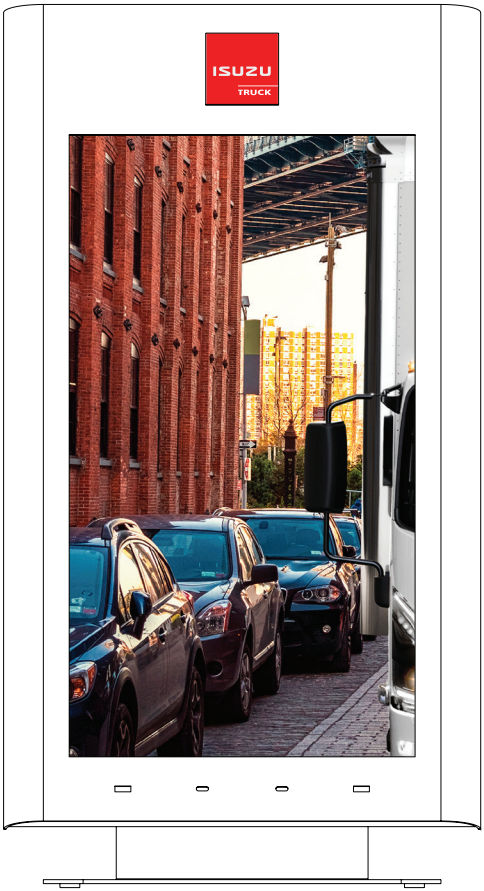

ISUZU DIGITAL SIGNAGE

User Manual
21.5 inch Digital Signage Display

TABLE OF CONTENTS

Without prior notice, all product information and specifications contained in this manual are subject to change to improve the performance of the product.
The power cord provided may differ depending upon the region.

1. Safety precautions **3**

2. Getting started **4**

2.1 Unboxing and inspection 4
2.2 Controls and functions 4
2.2.1 Brightness control 4
2.2.2 Input and output ports 5
2.2.3 Use of the navigation bar of the screen 5
2.3 Initial setup 6
2.3.1 Selecting time zone 6
2.4 Connecting the screen to the internet 11
2.4.1 Option A: Connect to Wi-Fi 12
2.4.2 Option B: Connect with an Ethernet cable 16
2.5 Powering on and off 17
2.6 Mounting and placement 17
2.7 Stand assembly 18
2.8 Display registration form 18

3. Troubleshooting and support **19**

3.1 Basic problem solving 19
3.2 Contacting customer support 19

4. Maintenance and care **20**

4.1 Cleaning and maintenance guidelines 20
4.2 Storage and transportation guidelines 20

5. Technical specifications **21**

6. Warnings **22**

6.1. FCC Warning 22
6.2. IC Warning 23

1. SAFETY PRECAUTIONS

caution

Please read these safety precautions carefully before operating your product. It is advisable to keep the manual for future reference.

Power Cord Safety

1. Do not use a damaged power cord or plug, or a loose power socket.
   - An electric shock or fire may result.
2. Do not use multiple products with a single power socket.
   - Overheated power sockets may cause a fire.
3. Do not touch the power plug with wet hands.
   - Insert the power plug securely to avoid an electric shock or fire.
4. Connect the power plug to a grounded power socket (type 1 insulated devices only) to prevent electric shock or injury.
5. Do not bend or pull the power cord forcefully.
6. Avoid leaving the power cord under a heavy object to prevent fire or electric shock.
7. Keep the power cord and product away from heat sources to avoid fire or electric shock.
8. Clean dust around the pins of the power plug or the power socket with a dry cloth to prevent a fire.
9. Do not disconnect the power cord while the product is in use to avoid damage by electric shock.
10. Use only the provided power cord for your product to prevent fire or electric shock.
11. Keep the power socket unobstructed; disconnect the power cord during issues to cut off power.
12. Hold the plug when disconnecting the power cord to avoid electric shock or fire.

Installation Warning

1. Do not place candles, insect repellents, or cigarettes on top of the product to prevent a fire.
2. Keep the plastic packaging out of the reach of children to prevent suffocation.
3. Avoid exposing the product to direct sunlight, heat, or hot objects to prevent a reduced lifespan or fire.
4. Edible oil, such as soybean oil, can damage the product; do not install it in a kitchen or near a kitchen counter.
5. Handle the product carefully during movement to prevent product failure or personal injury.
6. Do not set down the product on its front to avoid screen damage.
7. Never disassemble, repair, or modify the product yourself to prevent fire or electric shock.
8. To move the product, disconnect all cables, including the power cable, to prevent fire or electric shock.
9. If the product generates abnormal sounds, a burning smell, or smoke, disconnect the power cord immediately to avoid electric shock or fire.
10. Avoid placing heavy objects or items attractive to children atop the product, as this may lead to serious injury.
11. During a lightning or thunderstorm, power off the product and remove the power cable to avoid a fire or electric shock.
12. Do not drop objects on the product or apply impact to prevent fire or electric shock.
13. Do not move the product by pulling the power cord or any cable to avoid product failure, electric shock, or fire.

Gas Safety

1. If a gas leakage is found, do not touch the product or power plug.
   - Ventilate the area immediately to prevent an explosion or fire.
2. Do not lift or move the product by pulling the power cord or any cable to avoid product failure, electric shock, or fire.
3. Do not use or keep combustible spray or an inflammable substance near the product to prevent an explosion or fire.
4. Ensure vents are not blocked by tablecloths or curtains to prevent an increased internal temperature and fire.
5. Do not insert metallic objects or easily burnable objects into the product; power off and disconnect the cord if foreign substances enter to avoid product failure, electric shock, or fire.
6. Do not place objects containing liquid or metallic objects on top of the product; power off and disconnect the cord if foreign substances enter to avoid product failure, electric shock, or fire.
7. Leaving the screen fixed on a stationary image for an extended period may cause afterimage burn-in or defective pixels; dust accumulation combined with heat can cause fire, electric shock, or electric leakage.

DC Power Adapter Safety

1. Remove the plastic bag from the DC power adapter before use to prevent a fire.
2. Do not let water enter the DC power device or get the device wet; avoid using the product outdoors where it can be exposed to rain or snow.
3. Do not put the DC power adapter near any heating apparatus to prevent a fire.
4. Keep the DC power adapter in a well-ventilated area; do not hold the product upside-down or move it by holding the stand to avoid damage or injury.
5. Do not use humidifiers or stoves around the product to prevent a fire or electric shock.
6. Do not touch the screen when the product has been turned on for an extended period as it will become hot.

2. GETTING STARTED

2.1 Unboxing and inspection

Included items and accessories:

- Display with a custom frame
- Power adapter
- Extension cable
- Hex screwdriver and drill template
- Wall plugs
- 4 small bolts
- 4 medium bolts
- Manual
- Mouse
- Stand

When unboxing, verify the integrity and completeness of the included items and accessories before use. It is recommended to first install the screen before mounting. For mounting and placement see section 2.6 and 2.7.

PLEASE NOTE: It is essential to hereafter complete step 2.8: registering your screen. This needs to be done in order to receive content on your screen.

2.2 Controls and fuctions

2.2.1 Brightness control

Click the brightness buttons on the back to adjust the display brightness to the environment.

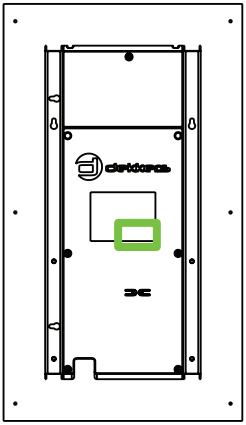

Left = - brightness
Right = + brightness

2.2.2 Input and output ports

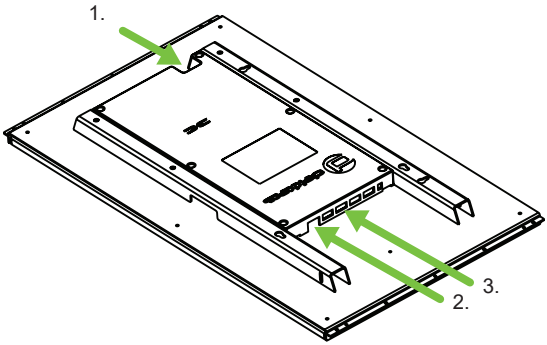

1. DC
Power input: 24V⎓3A.

2. Ethernet
Used to plug in the Ethernet cable.

3. USB
Used to plug in the mouse.

4. USB charging output:
Charging ports can be found on the front side.
There are 2 USB-A ports and 2 USB-C ports.
They do not support data transfer.
Power output: 5V / 1A.

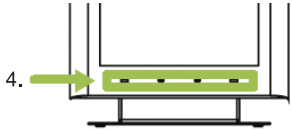

PLEASE NOTE: If the device needs to be added to a secure network, the MAC address of the screen should be communicated to your ICT department. To find the MAC address of the screen, please follow the instructions shared in the digital manual: https://www.dekkersinternational.com/isuzu-digital-signage-manuals.
Ports that must be open: TCP/443, TCP/9505, TCP/123 and TPC/5938.

2.2.3 Use of the navigation bar of the screen (only needed when installing the screen)

Use the icons in the navigation bar for the following use:

◂ Go back one page.

● Return to home screen.

■ Recently opened apps (this function is not used).

2.3 Initial setup

Time: 5 minutes

Start by following the steps below:

1. Remove display and accessories from the box.
2. Place the display face down on a clean and flat surface.
3. Connect the extension cable to the display.
4. Choose your preferred cable routing. You can route the cable either upward, downward, to the left or to the right.
5. Connect the adapter to the transparent extension cable, after this put the power plug in the wall socket.

The display will power on, this takes around 50 seconds.

6. Once the display is powered on, the correct time zone must be selected. Follow the steps on the next page.

2.3.1 Selecting time zone

1. Use the supplied screwdriver to remove the access port cover.

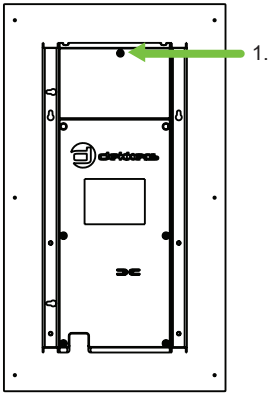

2. Plug in the provided USB mouse.

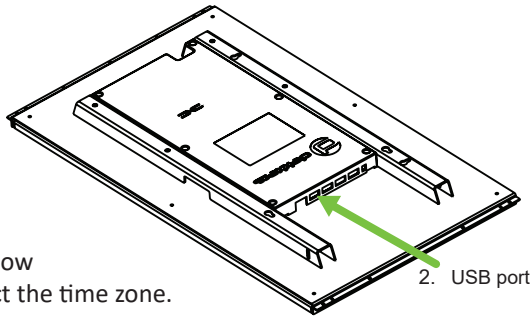

3. Turn the manual clockwise and follow the steps on the next page to select the time zone.

3.1 Click on the mouse and move the cursor to the top right corner.
Click on the 3 dots.

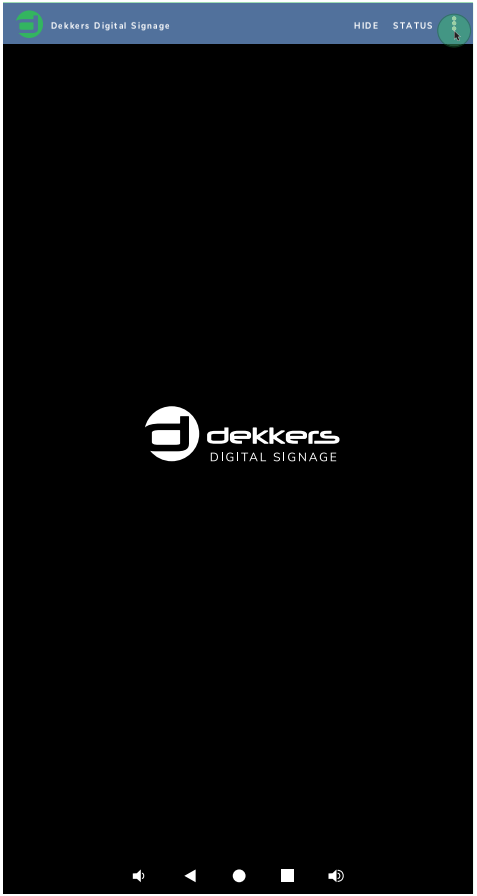

3.2 Click on System.

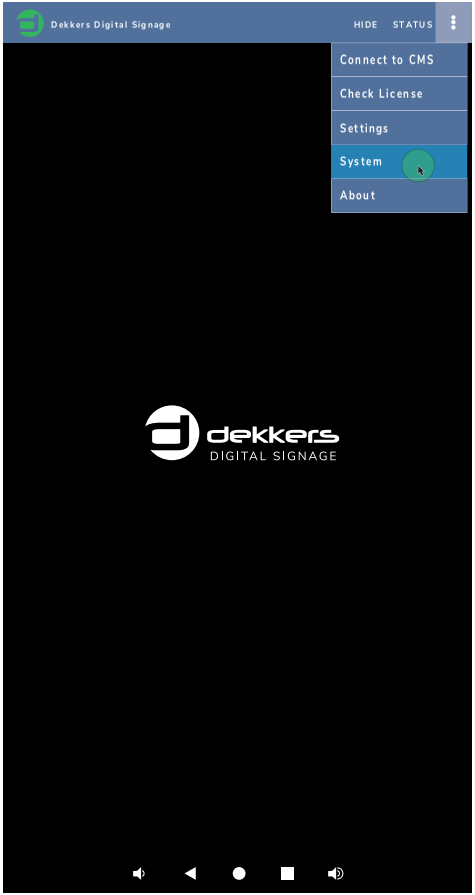

3.3 Click on System.

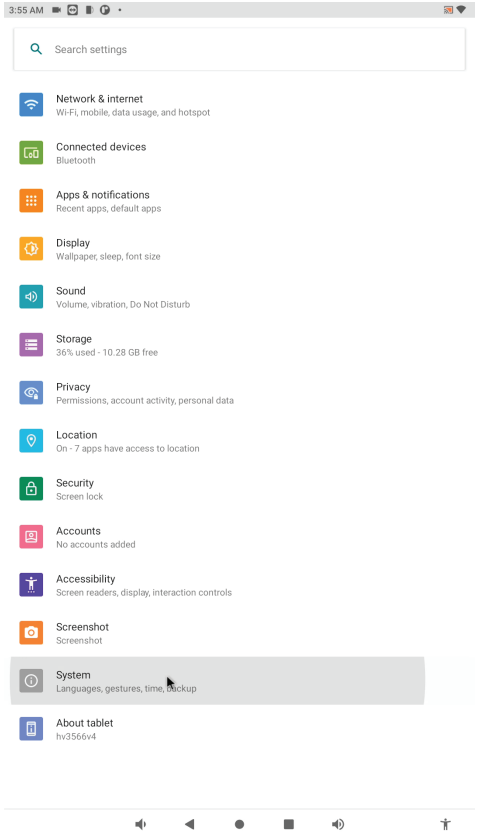

3.4 Click on Date & time.

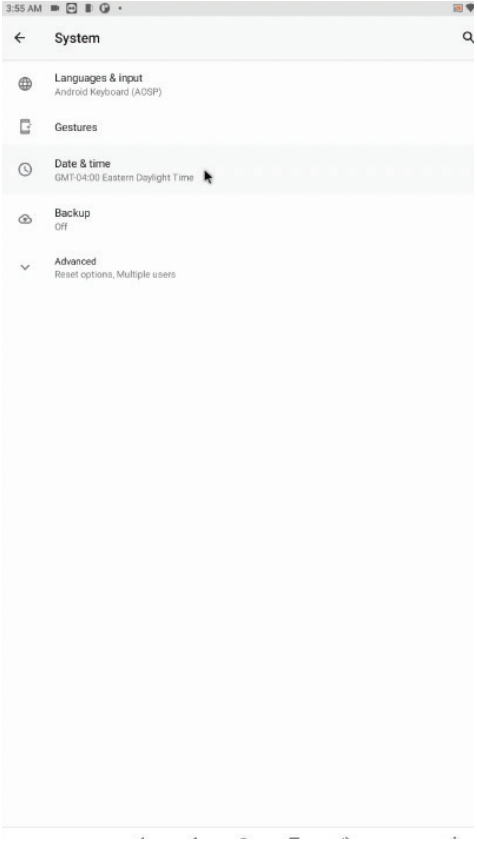

3.5 Turn off 'Use network provided time zone' by clicking on the toggle button.

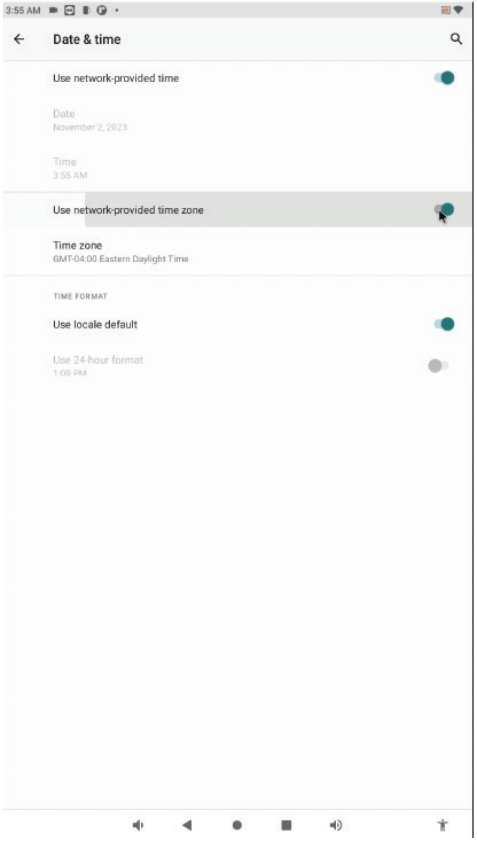

3.6 Click on Time zone.

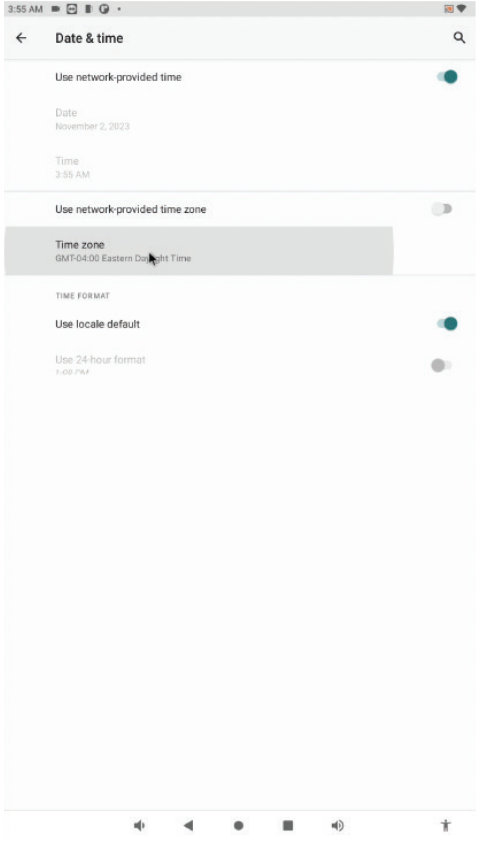

3.7 Click on Region.

3.8 Type in the country the display is located in with the keyboard.

3.9 Select the country / time zone the display is located in.

3.10 Click below on the small circle to return to the digital signage application.

3.11 Do not remove the mouse. It will be used for connecting to Wi-Fi.

When the time zone is selected, the display needs to be connected to the internet.

2.4 Connecting the screen to the internet

There are 2 options for this, which can be found in the following sections:

2.4.1 Option A: Connect to Wi-Fi (page 12)
2.4.2 Option B: Connect with an Ethernet cable (page 16)

If Wi-Fi is not available or a different method of connection to the internet is preferred, proceed to page 16.

PLEASE NOTE: If you have just finished selecting the time zone, the mouse is still connected and you can skip step 1 and 2 mentioned below.

2.4.1 Option A: Connect to Wi-Fi

1. Use the supplied screwdriver to remove the access port cover.

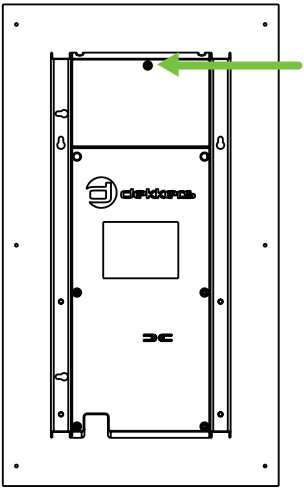

2. Plug in a USB mouse.

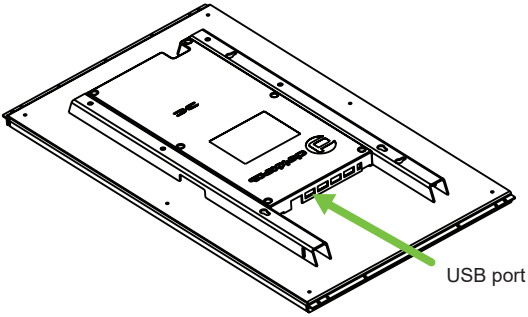

3. Turn the manual clockwise and follow the steps on the next page to connect to Wi-Fi.

3.1 Click on the mouse and move the cursor to the top right corner.
Click on the 3 dots.

3.2 Click on System.

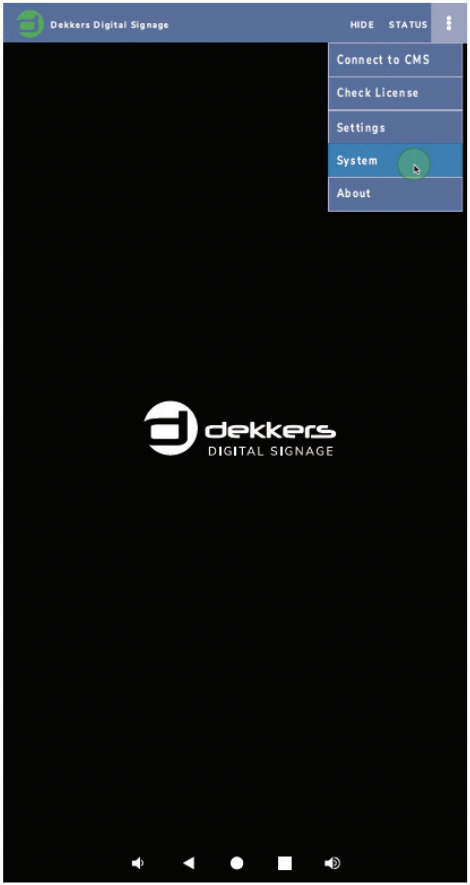

3.3 Click on Network & internet.

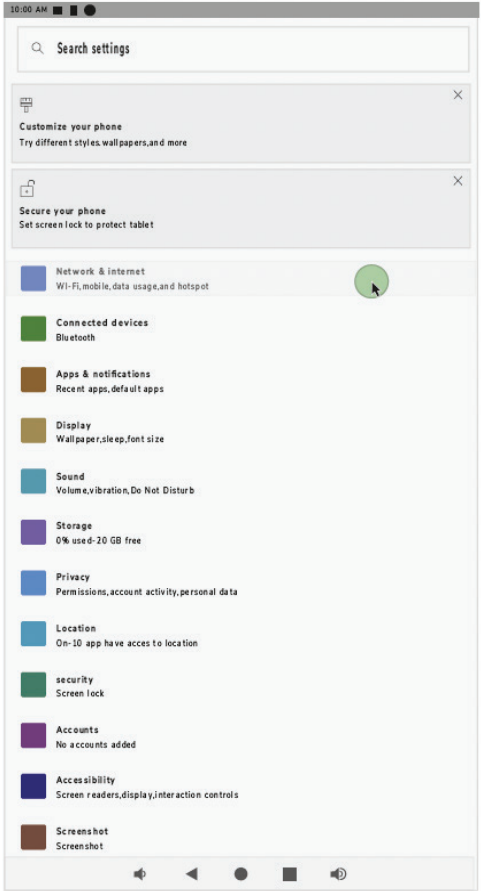

3.4 Click on Wi-Fi.

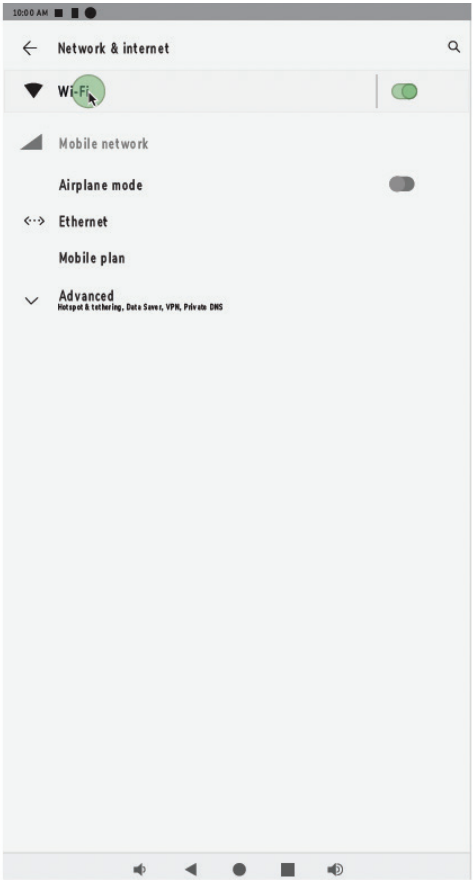

3.5 Select your preferred Wi-Fi network.

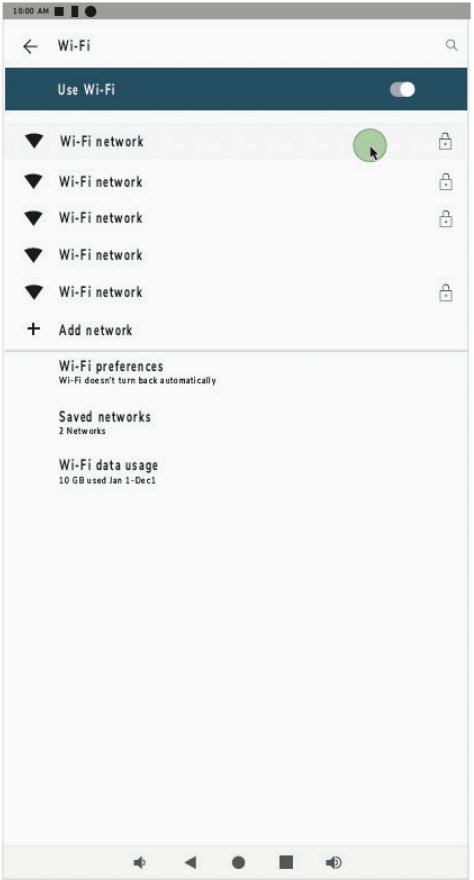

3.6 Click on the password type box.

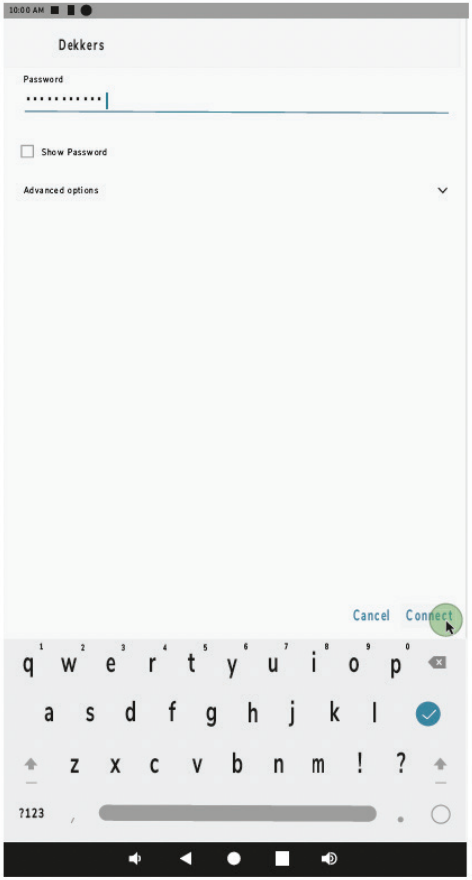

3.7 Type in the password on the key board and then click on Connect.

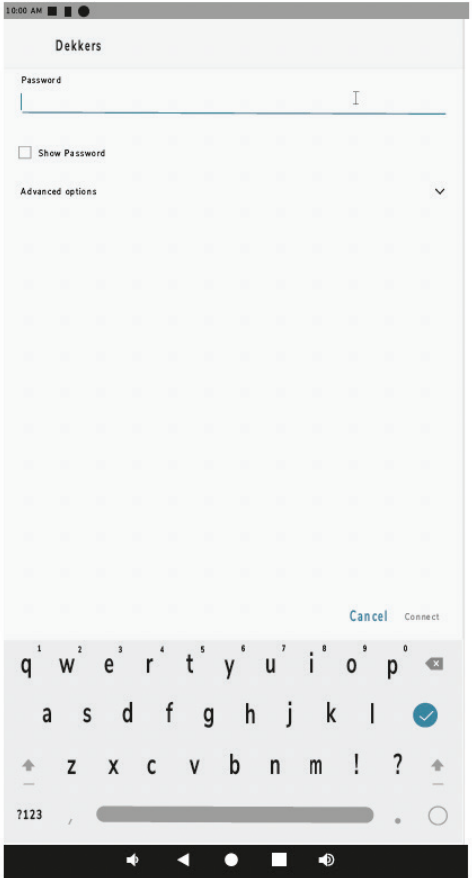

3.8 Click below on the small circle to return to the digital signage application.

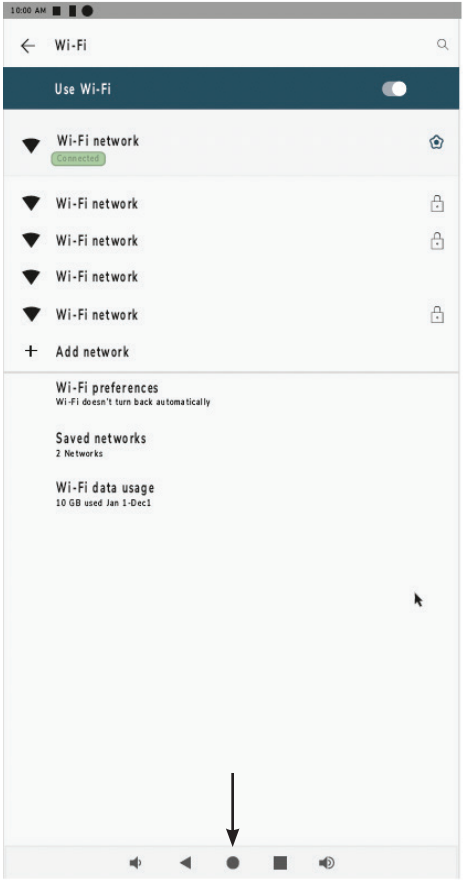

3.9: After returning, the initial slide with the ISUZU manual and QR code should appear.

3.10 The USB mouse can be removed and the port cover can be placed back in postion.

3.11 Now you can continue to step 2.6 or 2.7: mounting your screen.

PLEASE NOTE: If you have completed Option A, please proceed to page 18.

2.4.2 Option B: Connect with an Ethernet cable

1. Use the supplied screwdriver to remove the access port cover.

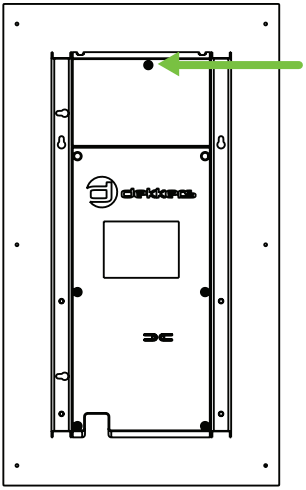

2. Plug in the connected Ethernet cable to the Ethernet port.

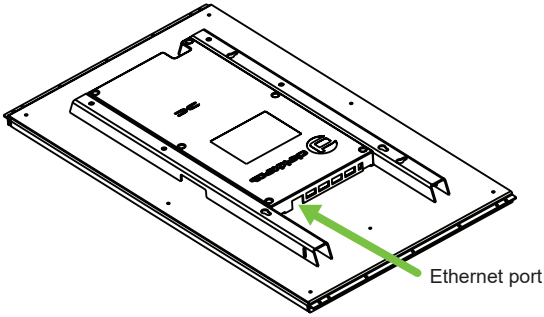

3. Check if the green light is constantly on and the orange light is blinking. If so, the display is connected to the internet.

4. The port cover can be placed back in position with the screwdriver. Once the display is connected to the internet, the planned content will start playing automatically.

2.5 Powering on and off

The device automatically powers on when the adapter is plugged in to the power outlet.

Power saving

Do not turn off the display. It turns on and off automatically based on the opening hours of its location.

2.6 Mounting and placement

Wall mounting

1. Identify a suitable wall position. Ensure the wall can support the weight of the display.
2. Use a stud finder to locate wall studs or use wall anchors if necessary.
3. Determine the hole spacing by using the provided drill template.
4. Use supplied screws and let them stick out 10 mm from the wall.
5. Carefully lift the display and align the key slot holes with the protruding screws on the wall. Ensure that it is well-secured.

Portrait

2.7 Stand assembly

May you wish to have a standing display follow the steps below.

1. Attach the top half of the stand to the baseplate using the provided medium sized bolts and screwdriver.

2. Carefully place the screen face down on a clean, flat surface.
   Attach the stand to the display's base using the provided small sized bolts and screwdriver.

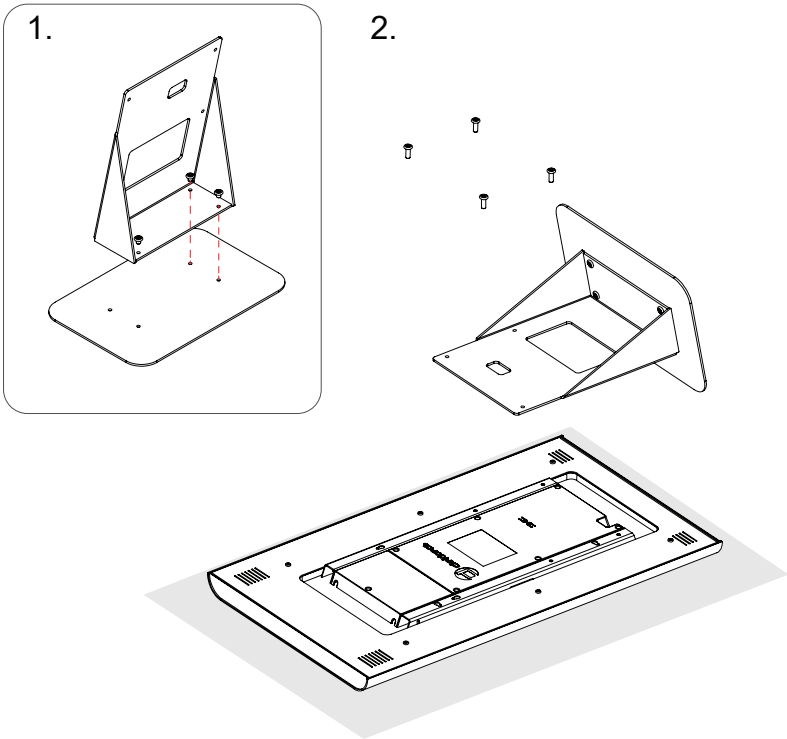

2.8 Display registration form

This step is **ESSENTIAL**.
Please make sure to register your screen in order to activate it.

To register your display go to:
https://www.dekkersinternational.com/en-us/registration-form-isuzu

Or scan the QR-code:

3. TROUBLESHOOTING AND SUPPORT

3.1 Basic problem solving

Is there no visual content on your display?

Check if the display is connected to the internet. If it is not connected, proceed to page 6 of this manual.

Check if the platform has content planned for the specific display.

If it is connected to the internet and there is content planned, please contact customer support.

Is the display not turning on?

If it is outside of the opening hours, the display will turn off automatically. It will turn on again 5 minutes before the opening time.

If it is within the opening hours, check if all power cables, the adapter and extension cable are plugged in correctly.

3.2 Contacting customer support

You can contact us by filling in the service request form: https://www.dekkersinterna-tional.com/en-us/isuzu-service-request

4. MAINTENANCE AND CARE

4.1 Cleaning and maintenance guidelines

Exercise care when cleaning the display as the panel and exterior of advanced LCDs are easily scratched. Take the following steps when cleaning:

1. Power off the display.

2. Disconnect the power cord from the product.
   Always hold the power cable by the plug, avoiding contact with wet hands to prevent electric shock.

3. Wipe the monitor with a clean, soft and dry cloth.
   Do not apply a cleaning agent that contains alcohol, solvents or surfactant to the monitor.
   Do not spray water or detergent directly on the product.

4. Dampen a soft cloth with water. Wring it thoroughly and clean the exterior of the product.

5. Reconnect the power cord once the cleaning is finished.

6. Power on the display.

4.2 Storage and transportation guidelines

The display must be transported and stored on its side.

5. TECHNICAL SPECIFICATIONS

ISUZU display	21.5 inch screen
Screen size	21.5 inch
Display resolution	1920x1080 (Full HD)
Sharpness	Full HD
Panel type	x
Aspect ratio	Standard (16:9)
Refresh rate	60 Hz / 60 FPS
Pixel density	102 PPI
Brightness (nits)	300 cd/m² - **adjustable**
HDR support	x
Contrast ratio	3000
Touchscreen	x
Local dimming	x
Color space	sRGB
Color depth	8 bit
IPS	x
Orientation	Portrait
Connectors	
USB	(2x) Standard USB-A
Smart printboard	Android 11
Power output (2x) USB-A (2x) USB-C	Power output single port 5V - 1A
Ethernet port	Yes
Power adapter	24V - 3A
Power extension cable	3 m
Wi-Fi	Yes
Environment and electrical characteristics	
Input voltage range	24V DC
Power consumption	16 W
Working temperature	-10 C ~ + 50 C
Storage temperature	-20 C ~ + 60 C
Working humidity	10 % ~ 80 % RH
Three anti-treatment	NO
ESD test	± 2 KV

6.WARNINGS

6.1. FCC Warning

Warning: To assure continued compliance, any changes or modifications not expressly approved by the party responsible for compliance could void the user's authority to operate this equipment.

FCC Statement
This equipment complies with Part 15 of the FCC Rules. Operation is subject to the following two conditions:
(1) This device may not cause harmful interference, and
(2) This device must accept any interference received, including interference that may cause undesired operation.

NOTE: This equipment has been tested and found to comply with the limits for a Class B digital device, pursuant to part 15 of the FCC rules. These limits are designed to provide reasonable protection against harmful interference in a residential installation. This equipment generates, uses and can radiate radio frequency energy and, if not installed and used in accordance with the instructions, may cause harmful interference to radio communications.
However, there is no guarantee that interference will not occur in a particular installation. If this equipment does cause harmful interference to radio or television reception, which can be determined by turning the equipment off and on, the user is encouraged to try to correct the interference by one or more of the following measures:
- Reorient or relocate the receiving antenna.
- Increase the separation between the equipment and receiver.
- Connect the equipment into an outlet on a circuit different from that to which the receiver is connected.
- Consult the dealer or an experienced radio/TV technician for help.

FCC Radiation Exposure Statement:
The equipment complies with FCC Radiation exposure limits set forth for uncontrolled environment. This equipment should be installed and operated with minimum distance 20cm between the radiator and your body.

6.2. IC Warning

(EN)
This device complies with Industry Canada licence-exempt RSS standard(s).
Operation is subject to the following two conditions: (1) This device may not cause interference, and (2) This device must accept any interference, including interference that may cause undesired operation of the device.

“This equipment complies with IC RF radiation exposure limits set forth for an uncontrolled environment.
This equipment should be installed and operated with a minimum distance of 20 centimeters between the radiator and your body.”

(FR)
Le présentappareilestconforme aux CNR d’Industrie Canada applicables aux appareils radio exempts de licence. L’exploitationestautorisée aux deux conditions suivantes: (1) l’appareil ne doit pas produire de brouillage, et (2) l’utilisateur de l’appareildoit accepter tout brouillageradioélectriquesubi, mêmesi le brouillageest susceptible d’encompromettre le fonctionnement.

“Ce matériel est conforme aux limites d’exposition aux rayonnements rf de ic énoncés dans un autre environnement.
Ce matériel doit être installé et exploité à une distance minimale de 20 cm entre le radiateur et votre corps.”

ISUZU

For support on your screen,
please contact Dekkers at:

digitalsignage@dekkersinternational.com

Fleet Value®
OE QUALITY PARTS AT COMPETITIVE PRICES

ISUZU
GENUINE PARTS