Robot Vacuum Cleaner
Zigma S4

User Manual

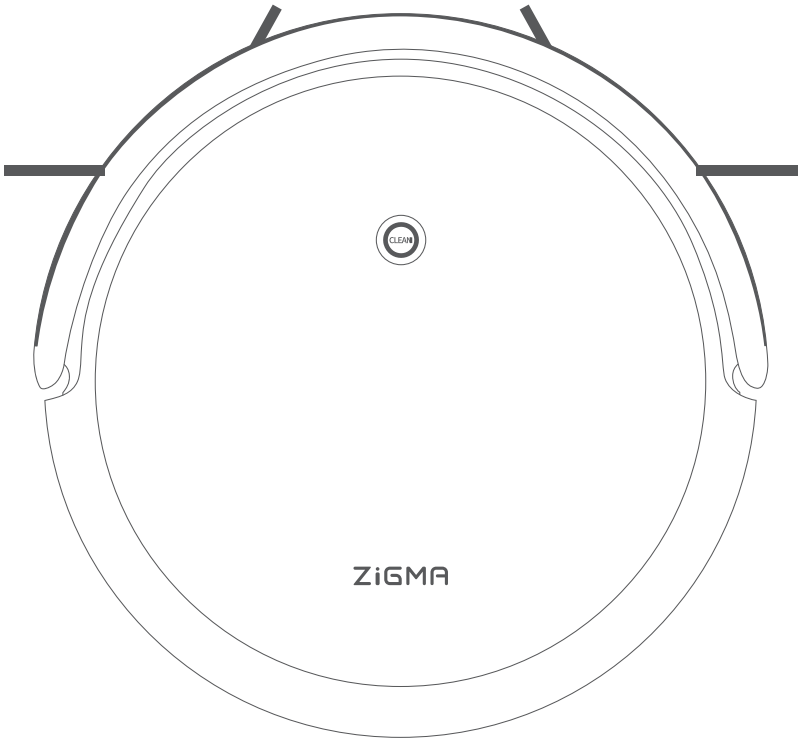

Please read this instruction carefuly before use and keep it well

Dear customers:

Thank you for choosing the artificial intelligent Robot vacuum cleaner! Please read all the operation instructions carefully before using your Robot and hang on to the operating instructions for future reference. We know you will love this vacuum! It is a highly intelligent robotic vacuum cleaner that utilizes an array of other sensors, all working together with navigation algorithms to create and follow sophisticated, accurate plans. Sweeping, vacuuming, all in one, that ends with regular, efficient, and full indoor cleaning that can be performed without the need of any human assistance.

Safety Instructions

Before using the product, please exercise caution and observe the following basic safety rules:

• Please read all content in this manual carefully and operate the product as instructed.
• Please keep the manual for future reference.
• Any operations that do not conform to the manual may cause serious personal injury or damage to the product.
• This product can only be used with the adapter, battery, and charging dock delivered with the product. Otherwise, it will cause product damage, electric shocks, or fire due to high voltage.
• Please stop using the product if the robot or any accessory is damaged. Contact after-sales service department to purchase or replace individually. Except for the repair technicians designated or authorized by **US** no one shall disassemble, repair, or modify this product.
• Do not use the product in a suspended environment (such as a second floor loft, open balcony, and tops of furniture) without a protective fence to avoid the robot accidentally falling, which may cause personal injury.
• This product is only used for floor cleaning in a home environment. Do not use it in outdoor (such as an open balcony), non-ground (such as a sofa), commercial, or industrial environments.
• Before using the product, please collect the cables in your house to prevent them from obstructing the product.
• Please put away or clean up any fragile items or debris (such as vases and plastic bags) on the floor to prevent the vacuum cleaner from being obstructed or slightly interfered with while operating, it may cause damage to valuables.
• Do not place the charging dock close to any heat sources (such as radiators).
• People with physical, mental, or sensory disabilities and small children are prohibited from using or operating this product.
• This product is not a toy. Small children and pets should be supervised when the robot is operating.
• Place the main brush cleaning tool in an area out of the reach of children.
• Do not place any objects (including children and pets) on the robot either when stationary or moving.
• Do not use the product in a room where infants or young children are sleeping.
• Do not let hair, fingers, or any other body parts near the dust suction port when the robot is operating.
• Do not use this product to clean long-strand carpets (some dark carpets may not be cleaned properly).
• Do not use this product to vacuum hard or sharp objects (such as decoration debris, glass, and iron nails).
• Do not use the bumper or top cover handles to carry the robot
• Clean or maintain the robot and charging dock only when the product is turned off or powered off.
• Do not use this product to clean burning or smoking objects (such as unextinguished cigarette butts).
• Do not use this product in an environment with a temperature above 40°C or below 0°C.
• Do not use this product on a floor covered in any liquids or sticky substances.
• Do not wipe this product with a wet cloth or directly wash the robot or charging dock under running water.
• Do not use the mopping function on the carpet or the tops of furniture.
• After unpacking, you may discover water stains or residual water drops on the product's water tank or water outlets, which is due to the specialized water tank test employed in the factory before delivery and is a normal occurrence. This will not affect product usage.
• If you need to transport this product, please ensure that the robot is turned off. It is recommended to use the original packaging for transportation.
• If you will not use this product for a long period of time, turn off the robot after it is fully charged and put the product in a cool, dry place. Charge the product at least once every three months to avoid over-discharge from the battery.
• Disconnect the product from the charging dock, turn it off, and remove the battery before disposal.
• Please strictly follow local laws and regulations for battery recycling and disposal.
• It is prohibited to burn the product even if the product is severely damaged because the burning battery may explode.
• Please use this product in accordance with the manual. Liabilities for any loss or injury caused by improper use shall be solely borne by the user.
• If the battery pack is leaking, avoid bringing the liquid in contact with the skin or eyes. If it has occurred, wash the affected area with copious amounts of water, and seek medical advice. Place the battery in a sealed plastic bag and dispose of it safely according to local environmental regulations.

Packing List

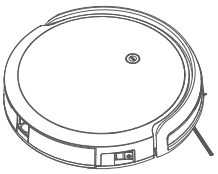

Main unit (main brush × 1
dust bin × 1, filter × 1
and side brush × 1) × 1

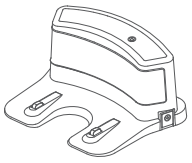

Charging dock × 1

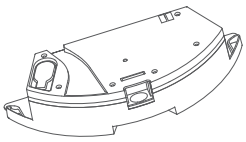

Water tank assembly
(mopping cloth × 1
and filter cartridge × 4) × 1

Power adapter x1

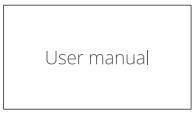

User manual × 1

Cleaning tool × 1

Remote control × 1

Note: A pair of side brushes, a set of filters, and the battery pack have been installed in the robot.

Product Appearance

Main unit

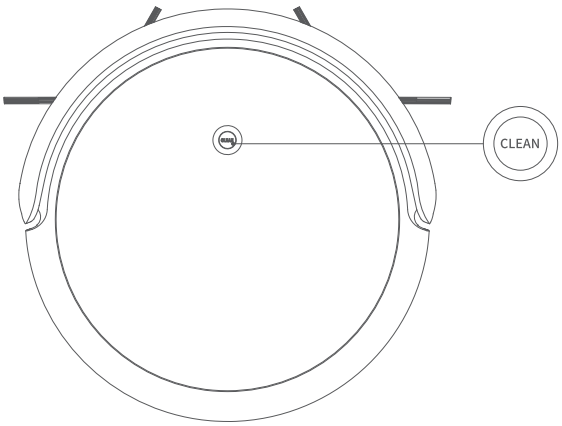

CLEAN button

- Press this button to initiate/pause cleaning.
- Press and hold this button for 3 seconds to return the robot to the charging dock.
- Press and hold this button for 8 seconds to reset the Wi-Fi.

Main Unit

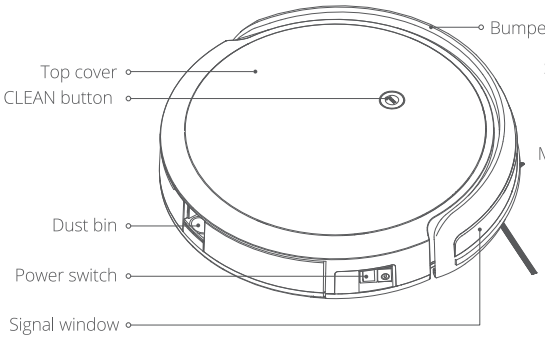

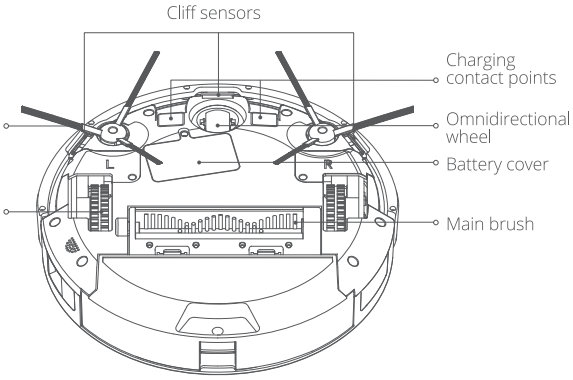

Water tank

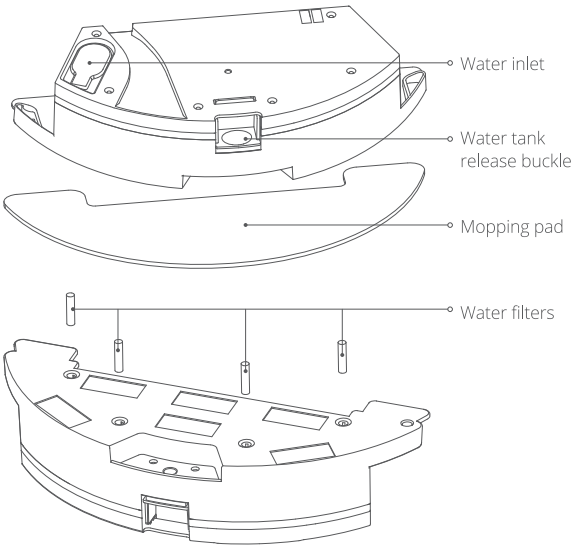

Charging dock

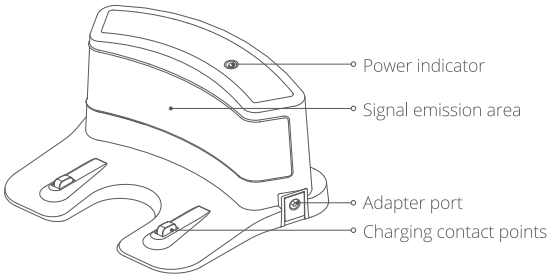

Note:
· After filling the water tank, please immediately reseal it with the rubber plug to avoid leaks due to inadequate sealing.
· The mopping function does not support scheduled cleaning.
· It is forbidden to add unapproved cleaners to prevent corrosion and blockages.

Dust bin

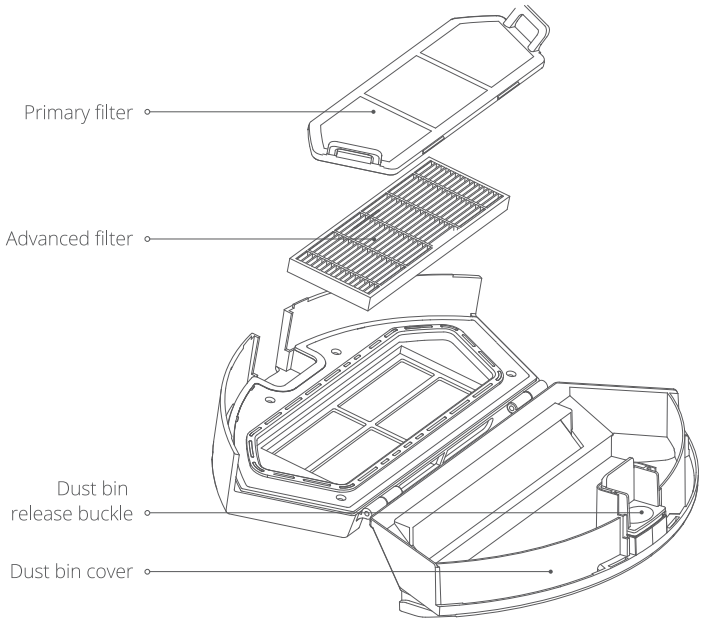

Note:
Use one hand to press and hold the bin release buckle, and the other hand to open the cover to open the dust bin.

Installation Instructions

1) Connect the power adaptor with the charging dock.

Note:
- Use cable ties to organize the excess cable to prevent the cables from being stretched by the robot while cleaning, which will interrupt the charging dock's power.
- The charging dock indicator is solid when it has power and is off when the robot is being charged.

2) Place the charging dock on the horizontal floor and connect the power supply.

Note: Please ensure that there are no objects placed within one meter on the left and right and two meters in the front of the charging dock, and there are no objects with strong reflective surfaces, such as mirrors.

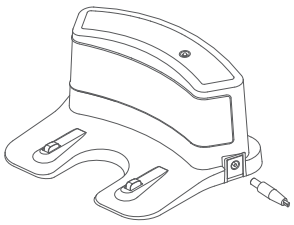

(1)

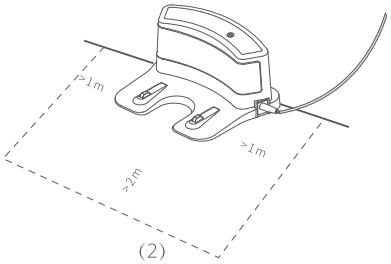

(2)

3) To ensure that the robot can operate and regularly return to the charging dock, do not move the charging dock randomly and frequently.

Note: The charging dock should be placed in an area without direct sunlight.

4) Before use, remove the protective strip on the bumper to ensure normal product use.

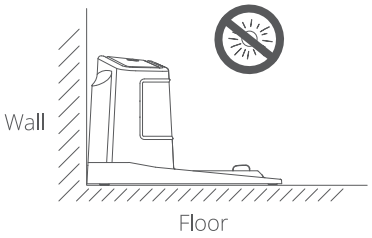

(3)

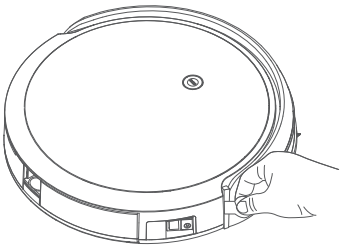

(4)

5) Turn on the robot.
The power switch is on the side of the robot, press "I" to turn the robot on (pressing "0" will turn it off).

Note:
- After the cleaning is completed, you are recommended to charge the product rather than directly powering it off to facilitate the next cleaning.
- If you will not use the product for a long period, please power off the robot to protect the battery.

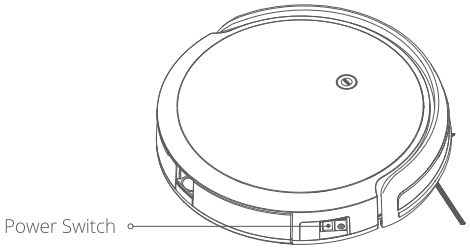

6) Charging

Method 1: Turn on the robot and place it no more than 1m in front of the charging dock. Once the start-up announcement is finished, press and hold the CLEAN button for 3 seconds, then release. The robot will automatically search for the charging dock and proceed with charging.
Method 2: Turn on the robot and place it no more than 1m in front of the charging dock. Once the start-up announcement is finished, press the charging button on the remote control. The robot will automatically search for the charging dock and proceed with charging.
Method 3: Turn on the robot and place it on the charging dock making sure the charging contact points are aligned. Then, the power indicator on the charging dock turns off, and the robot starts to charge and sounds a voice message.

Note:
- During daily use, clean the charging contact points on the charging dock and the robot. Otherwise, the charging effect might be affected.
- The product works properly at a minimum of 30% battery level left. Place the robot on the charging dock if it's below 30%.

- Maintain power to the charging dock. Otherwise, the robot will not return to the charging dock.
- When using the product to clean, ensure that the robot leaves from the charging dock to memorize the return route. (If the robot does not leave from the charging dock, it may take longer to automatically return to the charging dock, which is a normal occurrence.)
- When using the product for the first time, completely drain the battery and then fully charge it for five hours to extend battery life.
- The robot cannot return or be carried back to the charging dock in mopping mode.

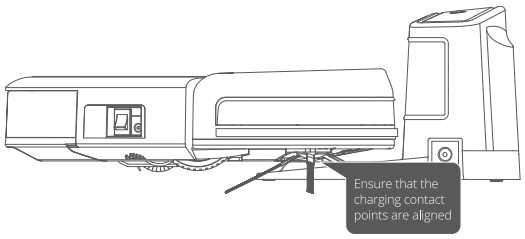

7) If the device works in a suspended environment, properly protect it with firm protective fences to prevent the device from accidentally falling, which may cause personal injury or property loss.

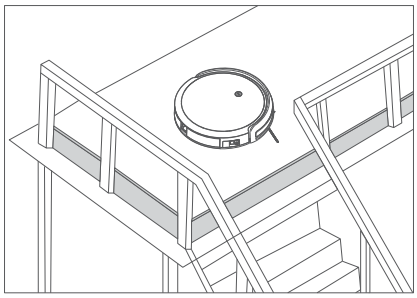

Remote Control Instructions

Product Appearance

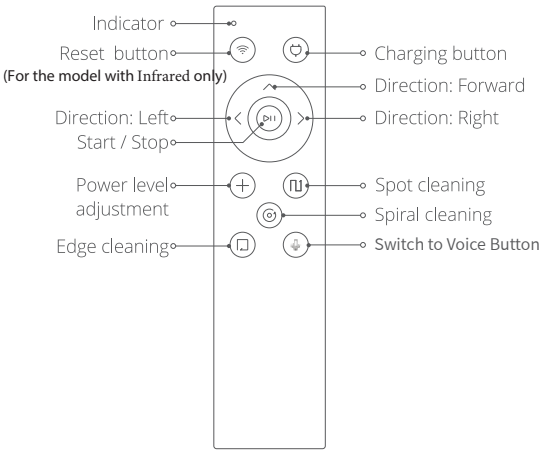

Note:
· Install two AAA batteries in the remote control and turn on the robot. Ensure the positive and negative ends are facing the correct directions as marked in the battery compartment.
· Please aim the Remote Control directly at the Robot when pressing.
· When the product is not connected to a Wi-Fi network, you can operate the robot with the remote control.
· When the robot is on the charging dock, it will back off a short distance and turns around for 180° if any direction button is pressed. After that, you can operate normally.
· In sleep mode, you can press the CLEAN button on the robot, use the app or remote control to wake it up.

Button Operation Instructions

Button		Operation	Function
	Reset button	Press and hold the button for 3s.	The product announces a voice prompt, , and the CLEAN button indicator on the cover of the robot quickly blinks blue. **(For the model with Infrared only)**
	Charging button	Quick press the button (when the robot has stopped).	The robot returns to the dock and starts charging.
		Quick press the button (when the robot is moving).	Pause / Stop: The robot is paused for its current cleaning or stopped to return to the charging dock.
	Direction: Forward	The robot works when the button is pressed and stops if the button is released.	Enable the remote control cleaning and move forwards.
	Direction: Left		Enable the remote control cleaning and turn to the left.
	Direction: Right		Enable the remote control cleaning and turn to the right.
	Start / Stop	Press the button (when the robot is stopped).	Enable automatic cleaning and self-charging mode.
		Quick press the button (when the robot is moving).	Pause / Stop: The robot is paused for its current cleaning or stopped to return to the charging dock.
	Power level adjustment	Quick press the button.	When the dust bin is equipped, if you press the button, the robot changes the power level and play a voice prompts.
	Spot cleaning	Quick press the button (when the robot has stopped).	Place the robot in the lower left corner of the area to be cleaned (about 1x1 meters). After pressing this button, the robot will start a zigzag cleaning of the area from the current position and return to the charging dock after cleaning.
		Press the button (when the robot is moving).	Pause / Stop: The robot is paused for its current cleaning or stopped to return to the charging dock.
	Spiral cleaning	Quick press the button (when the robot has stopped).	Place the robot in the center of the area to be cleaned (about 1.5 meters in diameter). After clicking this button, the robot will start a spiral pattern to clean from the current position and return to the charging dock after cleaning.
		Quick press the button (when the robot is moving).	Pause / Stop: The robot is paused for its current cleaning or stopped to return to the charging dock.
	Edge cleaning	Quick press the button (when the robot has stopped).	Enable the robot to find the wall and clean along the wall automatically. When complete, the robot returns to the charging dock.
		Quick press the button (when the robot is moving).	Pause / Stop: The robot is paused for its current cleaning or stopped to return to the charging dock.

Water Tank Assembly

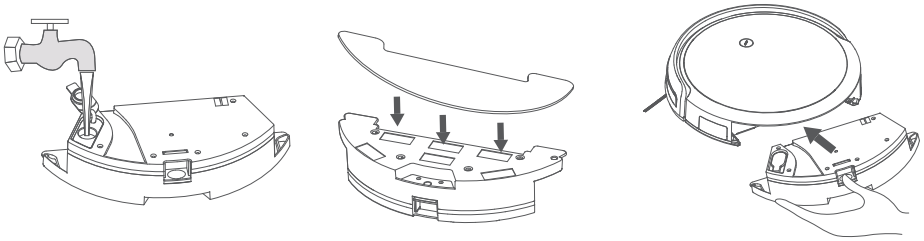

Step ❶: Lift the water tank plug up and turn it to the left or right. After filling water into the water tank, put the water tank plug back on.
Step ❷: Put the mopping cloth binding sleeves on the fixing positions on both ends on the bottom of the water tank.
Step ❸: Place the mopping cloth flat onto the Velcro on the water tank.
Step ❹: Push the water tank into the robot in the direction as shown in the figure until you hear a click.
Step ❺: Use the robot to mop the floor as normal.

Note:
· After filling the water tank, please immediately reseal it with the rubber plug to avoid leaks due to inadequate sealing."
· In order to achieve a better mopping effect, it is recommended to mop the floor with the water tank installed after the floor has been swept three times.
· Some stubborn stains may not be effectively removed after mopping. This function cannot completely replace manual cleaning.
· If there is a carpet on the floor, remove it before mopping to protect it from being smudged.
· While mopping, if you pause the robot to add water or clean the mopping cloth, the robot will re-plan the route upon restarting and re-clean the cleaned area if it paused for longer than 10 minutes, or the robot's position has changed. You are recommended to mop a single room at a time to achieve better cleaning effects.
· For your safety, remove the water tank assembly while charging, to avoid damage to wooden floors. Do not use the mopping function when there no one is home.
· After mopping, pour out the remaining water in the water tank and dry the water tank andmopping cloth.
· In order to guarantee an optimal water seeping, you should replace the water filter monthly
· Unapproved detergents or disinfectants are prohibited, since they may corrode or block the water tank.

Routine Maintenance

Routine Storage

If you will not use the robot for a long period of time, fully charge the battery and place the battery in a cool and dry place. Ensure that the bottom of the robot is dry.

Note: Please dispose of the battery properly. The battery contains hazardous substances that are harmful to the environment. Please dispose of them at specified recycling locations in accordance with the local environmental regulations.

Cleaning the Charging Contact Points

1) Power off the robot or remove the power plug.
2) Clean the charging contact points using dry cloth once every month.
3) Do not scrub the charging contact points with oil.

Cleaning the Dust Bin

Step ❶: Press the dust bin release buckle and take out the dust bin, as shown in Figure 1.
Step ❷: Use one hand to press and hold the release buckle, and the other hand to open the cover to open the dust bin and remove the dust.
Step ❸: Clean the dust bin as shown in Figure 3.
Step ❹: Take out the filters and clean the dust on them.
Step ❺: The dust bin and filters can be cleaned under running water. (Note: The dust bin and filters can only be put back after they are completely dry.)
Step ❻: After cleaning, re-install the filters and close the dust bin cover. Finally, insert the dust bin back into the robot.

Note:
・ Please open the dust bin upwards to avoid spilling anything inside.
・For a new robot, clean the dust bin once every three days in the first month. After that, clean it once every week. (It is recommended to replace the filter every 3-6 months to ensure a better cleaning result.)
・Do not place the filter under direct sunlight.

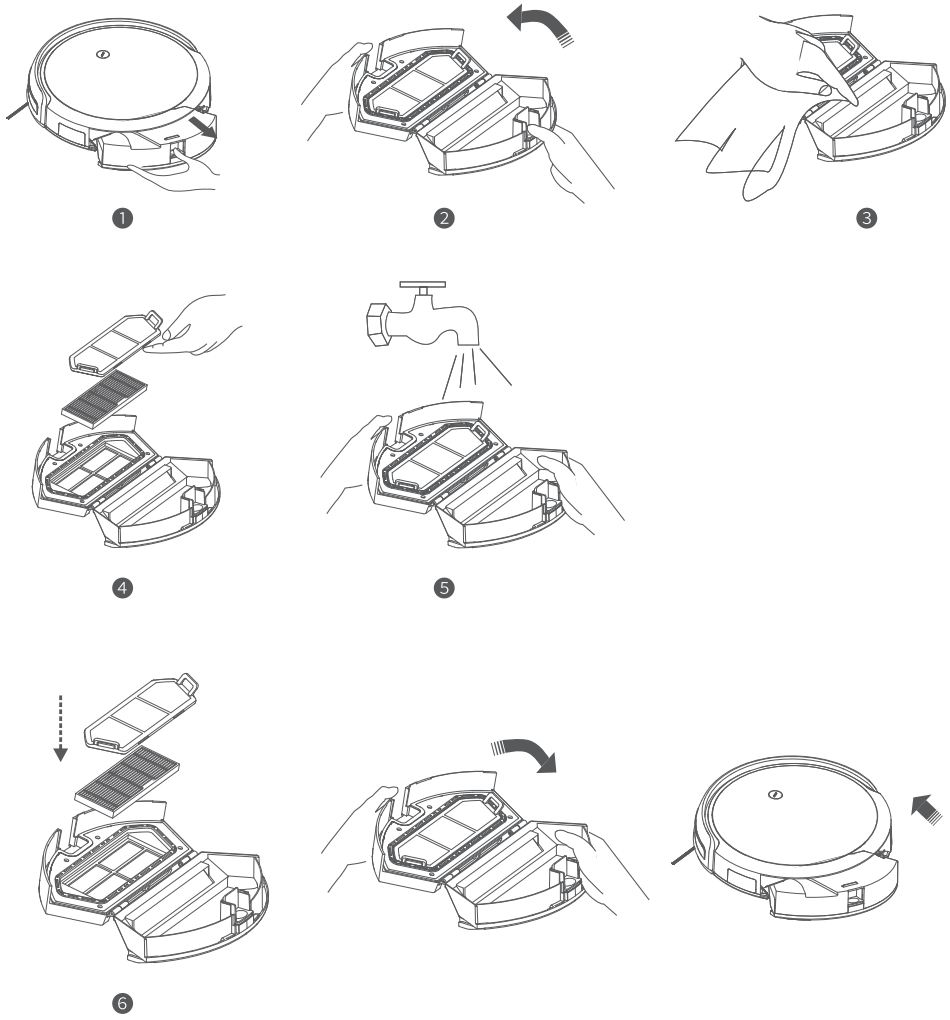

Cleaning the Mopping Pad

Step ❶: Press the water tank release buckle and take out the water tank, as shown in Figure 1
Step ❷: Remove the mopping pad from the velcro.
Step ❸: Rinse the mopping cloth, dry it, and reuse it. Avoid drying in the sun.

Note: Do not directly clean the mopping pad with the water tank under the running water.

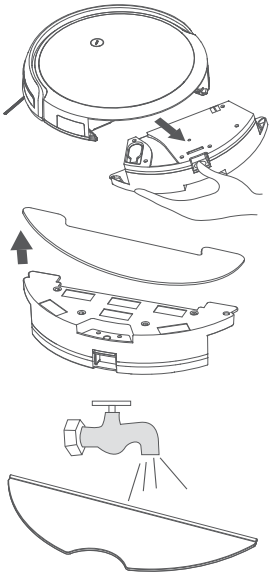

Cleaning the Wheels

Periodically clean the front, left, and right wheels using the cleaning brush.

Note: The wheel shafts may be tangled with hair, cloth strips, or other things. Please clean the wheel shafts regularly.

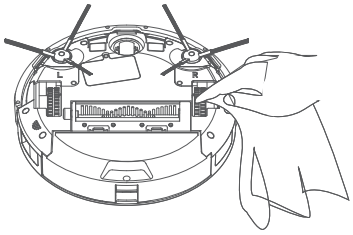

Cleaning the Sensors

It is recommended to clean each sensor of the robot (the signal window and anti-drop sensor) gently with a soft dry cloth after each cleaning to prevent dust from accumulating on the light panel, which will deteriorate the robot performance.

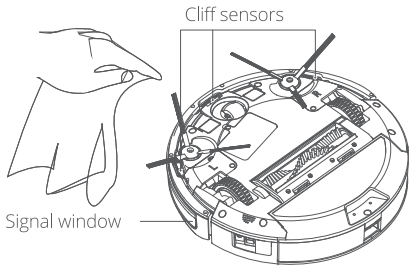

Cleaning the Side Brush

Step ❶: Remove screws from two side brushes using a screwdriver.
Step ❷: Remove the side brushes. Clean up the hair and dirt on the side brushes as well as the dirt in the side brush grooves.
Step ❸: Match the "L" and "R" marked on the bottom of the robot with the marks on the side brushes. Then, place the side brushes back in place.

Note: It is recommended to replace the side brushes every 3-6 months to ensure better cleaning.

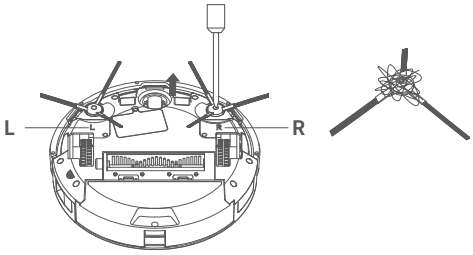

Replacing the Water Filters

Directly replace the water filters from the bottom of the water tank with new ones.

Note: It is recommended to replace the water filters monthly to ensure a better cleaning result.

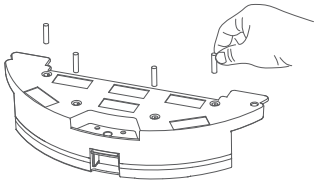

Cleaning the Universal Wheel (on a Monthly Basis)

Flip the robot over and pull out the universal wheel. Clean the hair and dirt on the wheel and in the wheel shaft, and then re-install and press the wheel firmly.

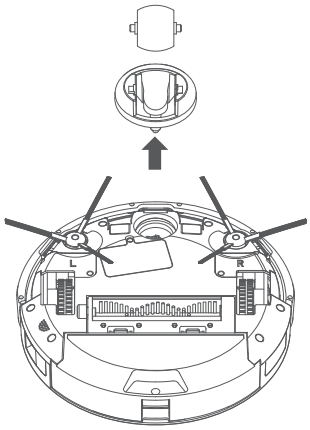

Firmware Update

In the mobile app, enter the firmware update page. Follow the prompts to update the firmware if a new firmware version is available. Ensure that the battery level is equal to or higher than 20% to perform firmware update. It is recommended to place the robot on the charging dock while updating the firmware.

Specifications

Main Unit	
Dimensions	315*315*79mm
Battery capacity	2600mAh
Operating voltage	14.4V ⎓
Rated power	30W
Battery	Lithium battery
Charging duration	⩽300min
Operating time	About 100 minutes per charging
Operating temperature range	0~45°C
Operating Humidity Range	⩽90%RH
Noise	⩽65dB

Accessories	
Power adapter	
Output voltage	19V ⎓
Output current	1A
Charging dock	
Input voltage	19V ⎓

Note: **We** reserves the rights to make any technical and design changes to the product due to the continuous improvements as well as the rights of final interpretation.

FAQ

Problem Type	Cause and Solution
The robot is unable to power on	1) When the battery level is low, place the robot on the charging dock with the charging contact points aligned. The robot will power on automatically (if the battery is completely out of power, it needs to be charged for a while before it powers on). 2) The ambient temperature is too low (below 0°C) or too high (above 50°C). Use the robot in an environment with a temperature ranging from 0°C to 40°C.
Fails to charge	1) Remove the robot and check whether the charging dock indicator is on. Make sure both of the charging dock and the power adapter are properly plugged in. 2) Clean the charging contact points of the robot and the dock.
Fails to go back to the charging dock	1) There are too many obstacles near the charging dock. Place the charging dock in an open area. 2) The robot is too far away from the charging dock to receive the signal. Try placing it near the charging dock.
Abnormal noises while cleaning	The side brush or wheel may be tangled by something. Turn off the robot and clean it.
Cleaning ability reduced, dust left behind	1) The dust bin is full. Empty and clean it. 2) The filter is clogged. Clean or replace it. 3) The side brush is tangled by something. Clean it.
Fails to connect to the Wi-Fi network	1) The Wi-Fi signal is poor. Ensure that the robot is within good Wi-Fi coverage. 2) The Wi-Fi connection is abnormal. Reset the Wi-Fi and download the latest version of the mobile app and try the connection again. 3) The input password is incorrect. 4) The router uses the 5 GHz band, while the SmartAI robot supports only the 2.4 GHz band.
Fails to perform scheduled cleaning	The battery power is insufficient. The scheduled cleaning only starts when the remaining power is ≥30%.
Does the robot consume power when it is on the charging dock?	Power consumption is very low while the robot is charging, which helps keep the battery at its optimal performance.
Is it necessary to charge the robot for 16 hours for the first three times?	The lithium battery has no memory effect. Charging can be stopped when it is fully charged. It is unnecessary to charge it for 16 hours.

Federal Communications Commission Information

This product complies with the Telecommunications Act of 1996 of the Federal Communications Commission of the United States, and its approval code (CMIIT ID) is displayed on the product nameplate.

Troubleshooting

Fault Voice Prompt	Problems and Solutions
Error 1: I need to change my start location.	The robot is lifted up or suspended.
Error 2: Wipe off the bottom anti-drop sensors.	The cliff sensor(s) is covered, dirty or suspended.
Error 3: Please clean the IR self-charging sensor.	The IR self-charging sensor corresponding to the signal window is dirty or blocked.
Error 4: Please wipe off the wall sensor.	The wall sensor responding to the signal window is dirty or blocked.
Error 5: Oh, the edge seems to be stuck.	The edge of the bumper or internal light touch sensor is stuck.
Error 6: I'm trapped. Please help!	The robot is stuck.
Error 7: I'm tilted. Please set me upright.	The robot is tilted.
Error 8: Hey, the main wheel is stuck. Please help!	The main wheel is stuck or entangled.
Error 9: Hey, the side brush is stuck. Please help!	The side brush is stuck or tangled.
Error 10: Where is the charging dock?	The robot cannot find the charging dock or the charging dock does not have power.
Error 11: Malfunction! Please try restarting me!	The robot may have encountered an unknown error. Restart the robot.
Error 12: Malfunction! Please power off!	This failure needs to power off the robot. After reminding the user, the robot automatically shuts down or goes back to the charging dock.
Error 13: I need to charge!	Cleaning is triggered while the battery level is too low (below 20%), and the robot is not on the charging dock.
Error 14: I cannot shut down on the charging dock.	The robot is powered off when it is charging on the charging dock.

Note:
- When the robot runs abnormally, the ring indicator flashes red and announces a voice prompt. Please refer to the above table to resolve the problems.
- If the problems persist after troubleshooting, please contact the after-sales service. Do not disassemble the robot yourself.

Hazardous Substance Status

Toxic and Hazardous Substances and Elements	Parts					
	Plastic Casing	Printed Circuit Boards (PCB)	Power Cord	Battery	Metal Parts	Power Adapter
Lead (Pb)	○	×	×	×	○	×
Mercury (Hg)	○	○	○	○	○	○
Cadmium (Cd)	○	○	○	○	○	○
Hexavalent chromium (Cr (VI))	○	○	○	○	○	○
Polybrominated biphenyls (PBB)	○	○	○	○	○	○
Polybrominated Diphenyl Ethers (PBDE)	○	○	○	○	○	○

The environmental protection period of each component is: PCB 10 years, power cord 10 years, battery 5 years. The environmental protection period marked by this product refers to the safe period of use for the product without any leaks of toxic and hazardous substances under the conditions specified in this user manual.

○ : It indicates that the toxic and hazardous substances in all homogeneous materials of this part are below the limit specified in SJ/T11363-2006.

× : It indicates that the toxic and hazardous substances in at least one homogeneous material of this part exceeds the limit specified in SJ/T11363-2006.

Remarks: The lead content in a small number of special-purpose SMT electronic components (such as high-voltage resistors, ceramic resistors, diodes, etc.) in the section labeled ""×"" in the above table may be ≥ 0.1%. The lead content in screws or cores of data cables can be ≥0.1% due to the superior performance of the alloy. These components are in compliance with exemption clauses of the EU RoHS Directive. At this stage, due to the limitations in the global technological development level, there are no alternative technologies or components, and the lead content of the external contactable parts of the product meets environmental protection requirements.

Precautions and After-sales Service

Warranty Content

Item	Warranty Content	Warranty Period
Main unit	Main unit (including the built-in lithium battery)	1 year
Accessories	Charging dock and power adapter	1 year
Consumables	Side brush, filter, cleaning tools, dust bin, filter cartridge and AAA batteries	/

Note: Consumables delivered with the product have no warranty.

Exclusions and Limitations

1. The product is repaired without permission, wrongly used, crashed, neglected, misused, gotten wet, or damaged in an accident, modified, wrong accessories are used, or the anti-fraud label is torn off or altered.
2. Warranty period expires.
3. Damage is caused by force majeure.
4. Circumstances not listed in the Product Performance Defect List.
5. Defects of product and accessories caused by the owner or user.

FCC Compliance Notice

This device complies with part 15 of the FCC Rules. Operation is subject to the following two conditions:

(1) This device may not cause harmful interference, and

(2) this device must accept any interference received, including interference that may cause undesired operation.

Any changes or modifications not expressly approved by the party responsible for compliance could void the user's authority to operate the equipment.

This equipment has been tested and found to comply with the limits for a Class B digital device, pursuant to part 15 of the FCC Rules. These limits are designed to provide reasonable protection against harmful interference in a residential installation. This equipment generates, uses and can radiate radio frequency energy and, if not installed and used in accordance with the instructions, may cause harmful interference to radio communications. However, there is no guarantee that interference will not occur in a particular installation. If this equipment does cause harmful interference to radio or television reception, which can be determined by turning the equipment off and on, the user is encouraged to try to correct the interference by one or more of the following measures:

-Reorient or relocate the receiving antenna.

-Increase the separation between the equipment and receiver.

-Connect the equipment into an outlet on a circuit different from that to which the receiver is connected.

-Consult the dealer or an experienced radio/TV technician for help.

FCC Radiation Exposure Statement

This equipment complies with FCC radiation exposure limits set forth for an uncontrolled environment .

This transmitter must not be co-located or operating in conjunction with any other antenna or transmitter.

This equipment should be installed and operated with minimum distance 20cm between the radiator& your body.

Warranty Card

User Information

Name _____ Tel _____

Email _____ Zip Code _____

Address _____

Product Information

Model _____

Color _____

Main Unit SN _____

Service Record

Fault Symptom	Service Date	Service Decision	Service Technician ignature