Litum

08.2020 - 1.100.M1

MOUNTING & OPERATING INSTRUCTIONS

LITUM® ANCHOR/GATEWAY

OUTDOORS

Do you have all the tools needed?

1 M5 x 30 PANHEAD SCREWS x 4

2 WALL ANCHOR x 4

Make sure that you have the correct type of anchors for the wall that you're mounting the device (i.e: concrete, drywall)

Hammer

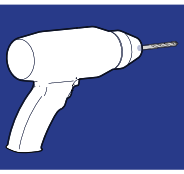
Drill

Screwdriver

Laser Meter

Tape Measure

Pencil

Bubble Level

Tape

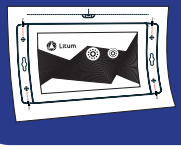
Template

INSTRUCTIONS

All instructions here are for Litum Anchor/Gateway Outdoors referred to as "Anchor/Gateway(s)" in the document.

⚠ CAUTION

The anchor/gateway is **not suitable for mounting on metal surfaces.** Make sure that you are mounting it on a non-metal surface such as concrete, plastic, drywall, etc.

⚠ CAUTION

The anchor/gateway has unique node IDs that are printed on their backside labels.

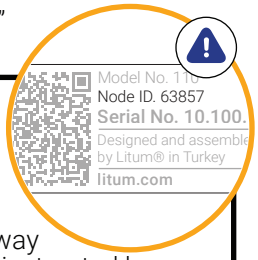

It is critical that you mount the anchor/gateway with the correct **node ID** at each location as instructed by Litum application engineering team.

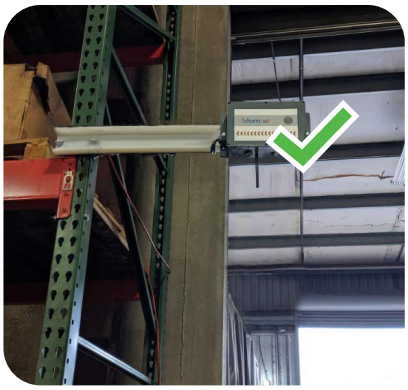

WHERE TO MOUNT

1 The anchor/gateway must be mounted **on walls, not on ceilings.**

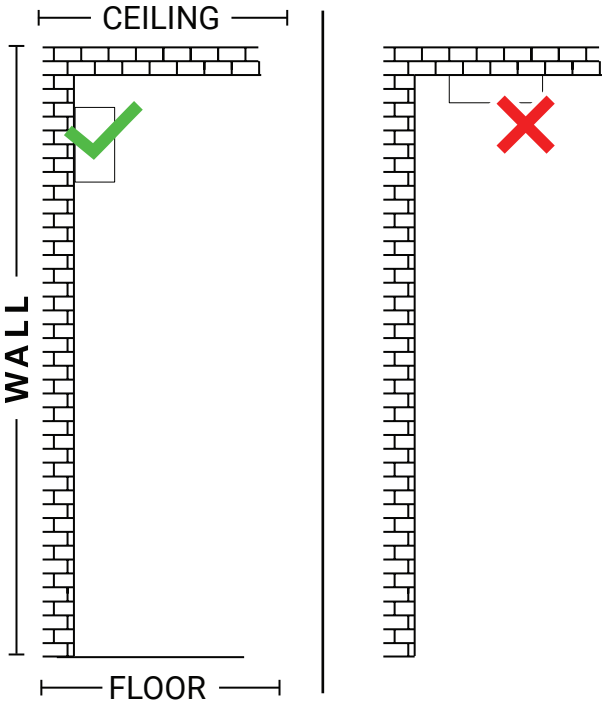

2 All anchors/gateways must be mounted consistenly to **the same height across the facility.**

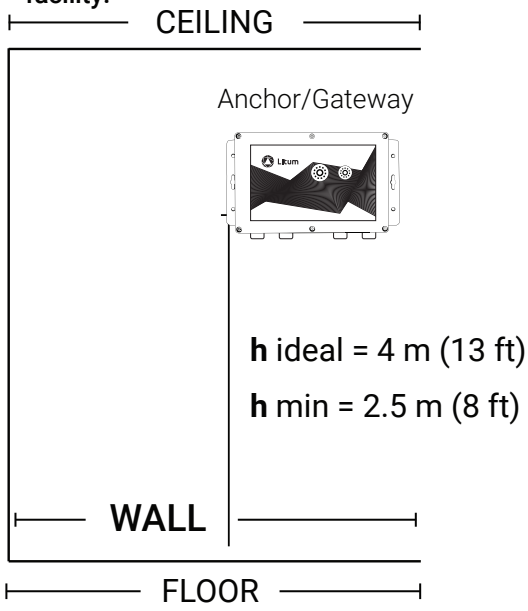

If it is required to install the anchor/gateway higher than 4m (13 ft), please consult Litum.

WHERE TO MOUNT

3 If you need to mount anchor/gateway close to a corner, make sure to stay away at least 50 cm (1.5 ft).

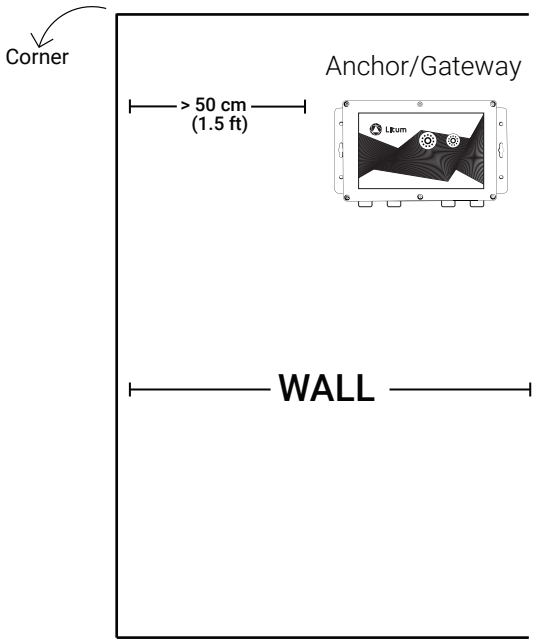

4 The anchor/gateway is a very sensitive locating device. For its optimal performance, it needs to be mounted **on the exact location** that is instructed by Litum application engineering team. When you find the correct location of the anchor/gateway, we recommend that you choose a fixed reference point (such as a corner, window, etc.) and take another measurement from there to double check its location. Please make sure that you are using a correctly scaled floor plan.

5 In cases where two anchors/gateways need to be mounted closely, make sure that they are **at least 2 m (6 ft) away from each other.**

6 Devices that transmit electromagnetic signals, such as **WiFi access points**, may have a negative impact on anchor/gateway performance. If you see such a device close to where the anchor/gateway is to be mounted, please consult with Litum application engineering team before you proceed.

HOW TO MOUNT

1 LOCATE & MARK

Print the anchor/gateway drilling template. Use it with bubble level and place it on the wall.

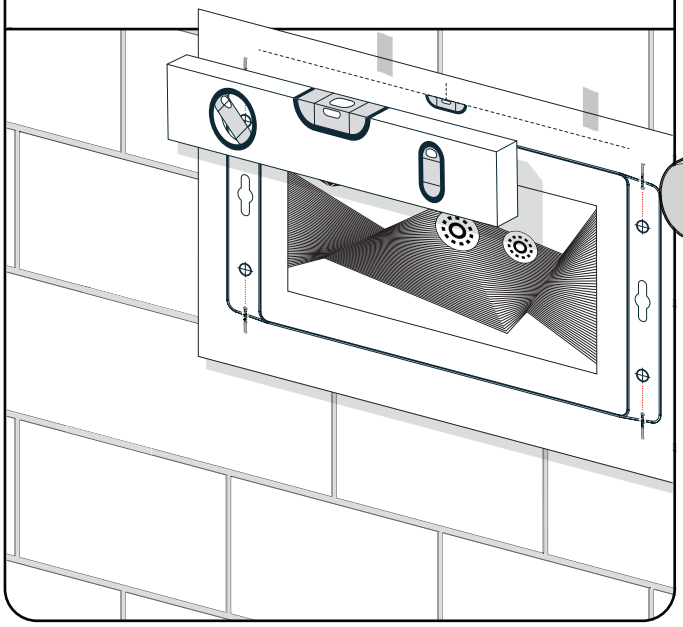

2 DRILL & INSERT WALL PLUGS

Drill the four holes on the template and insert wall plugs.

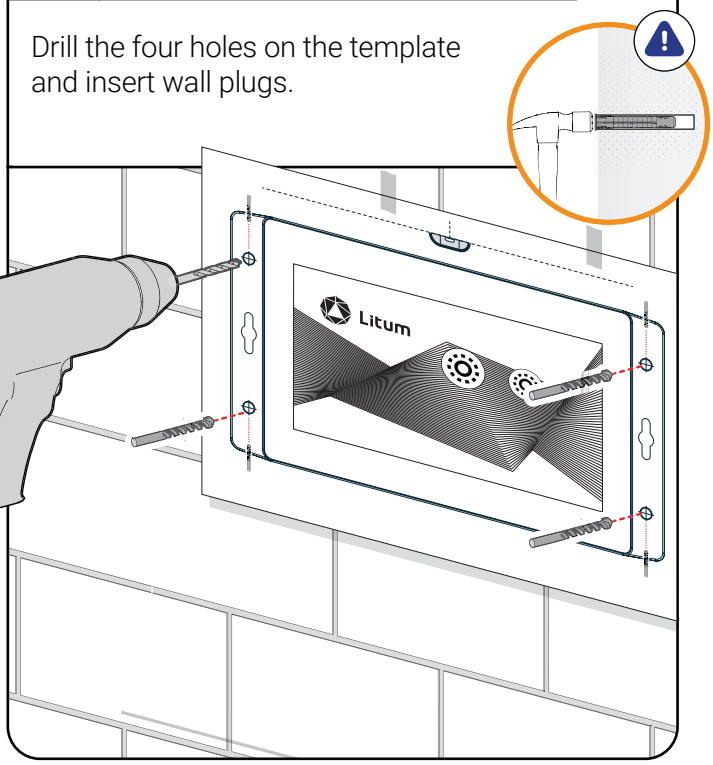

4 INSTALL SCREWS

Firmly install all screws until they are pulled flush against the plastic surface of the anchor. All screws **must be** firmly installed to prevent unwanted movement of the anchor. Ensure the device is securely fastened to the wall.

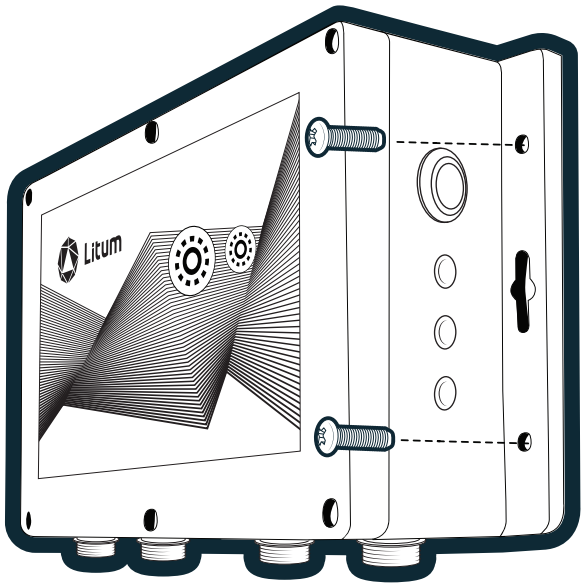

5 PLUG IN

You can connect the anchor/gateway to AC or DC power outlet as shown below.

Make sure to use correct power outlet for your device. Failure to do so might result in explosion.

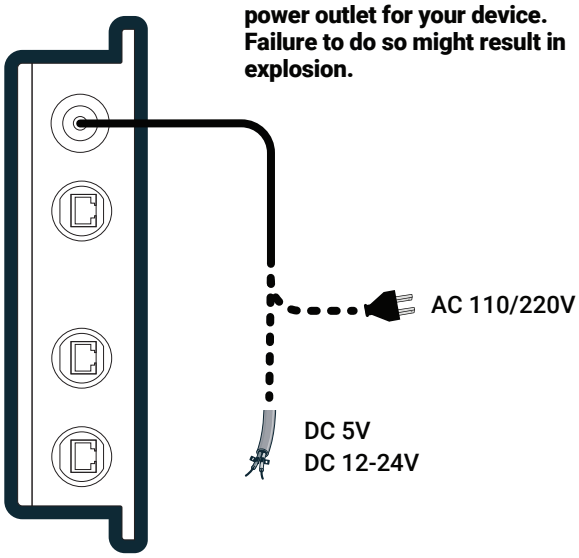

OPERATION

When the device is connected to a stable power supply, service LED should start to blink.

The service LED will light up and remain steady when the device is communicating with a server.

RF Comm LED indicates RF communication is active.

The device has an internal backup battery. Turn the backup battery switch on to ensure the device continues to work during power outage or emergencies. To turn off the device completely, the backup battery switch should be turned off.

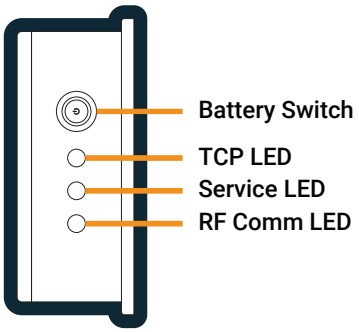

Devices with RS232 or RS485 communications can be connected to the device through the optional Aux Comm port. Please contact Litum for supported devices.

Digital input and relay output can be pushed through the optional I/O port. For details please contact Litum.

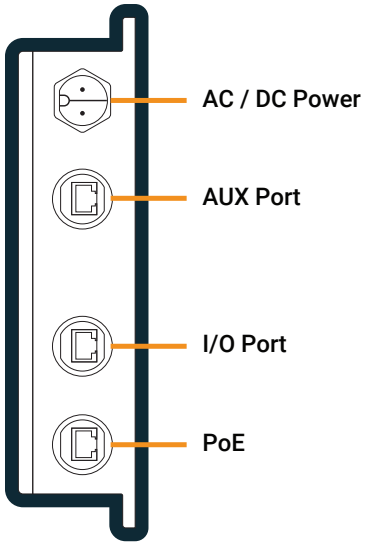

In case of emergencies that can be triggered by the system, the siren and the lights will provide alerts.

TCP LED will only be available if the device is a gateway and it will be constantly on. Network settings for the gateways will be done by Litum.

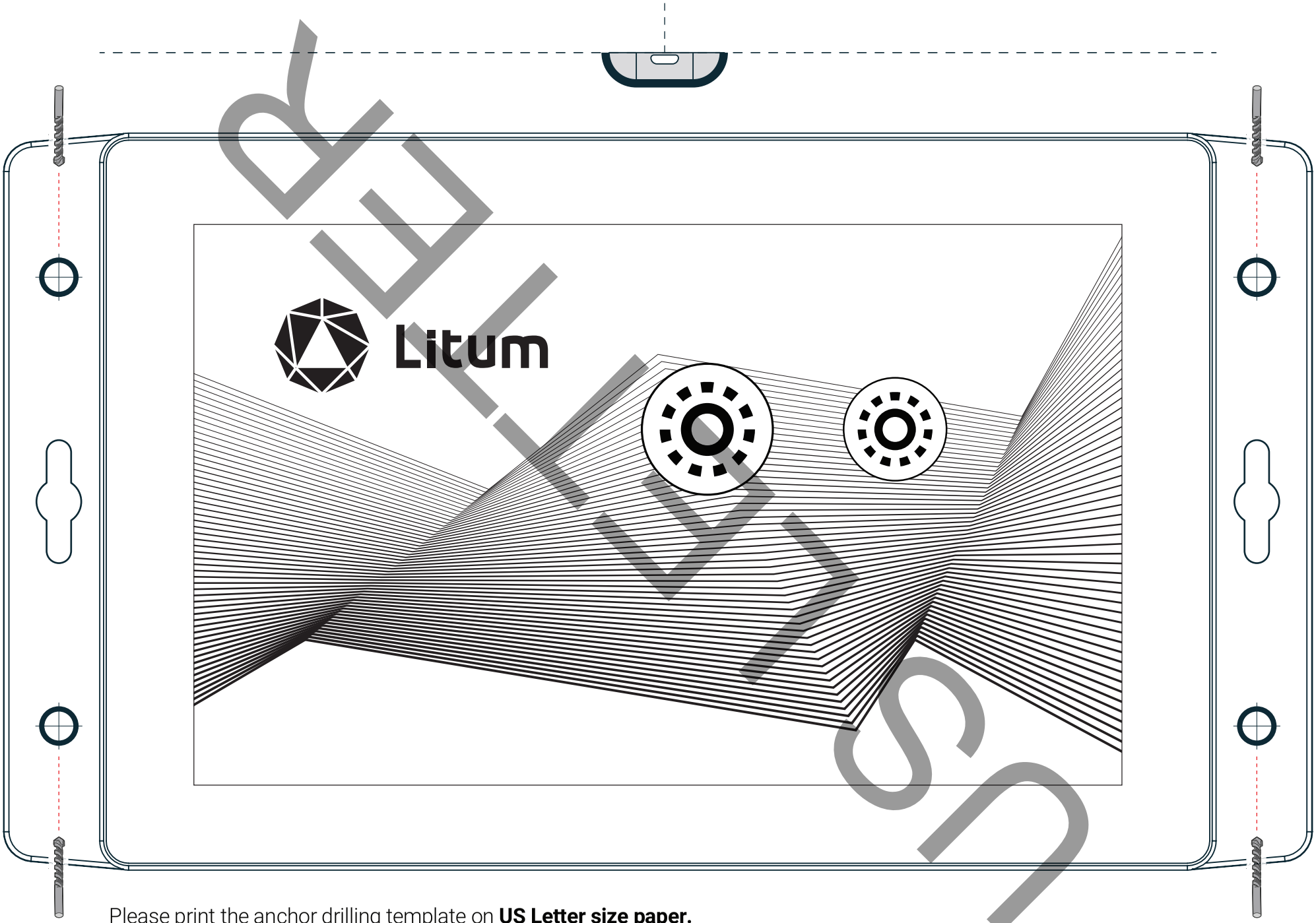

Please print the anchor drilling template on **US Letter size paper.**

Please check that the **template printout aligns with Litum Anchor/Gateway Outdoors screw holes** before proceeding.

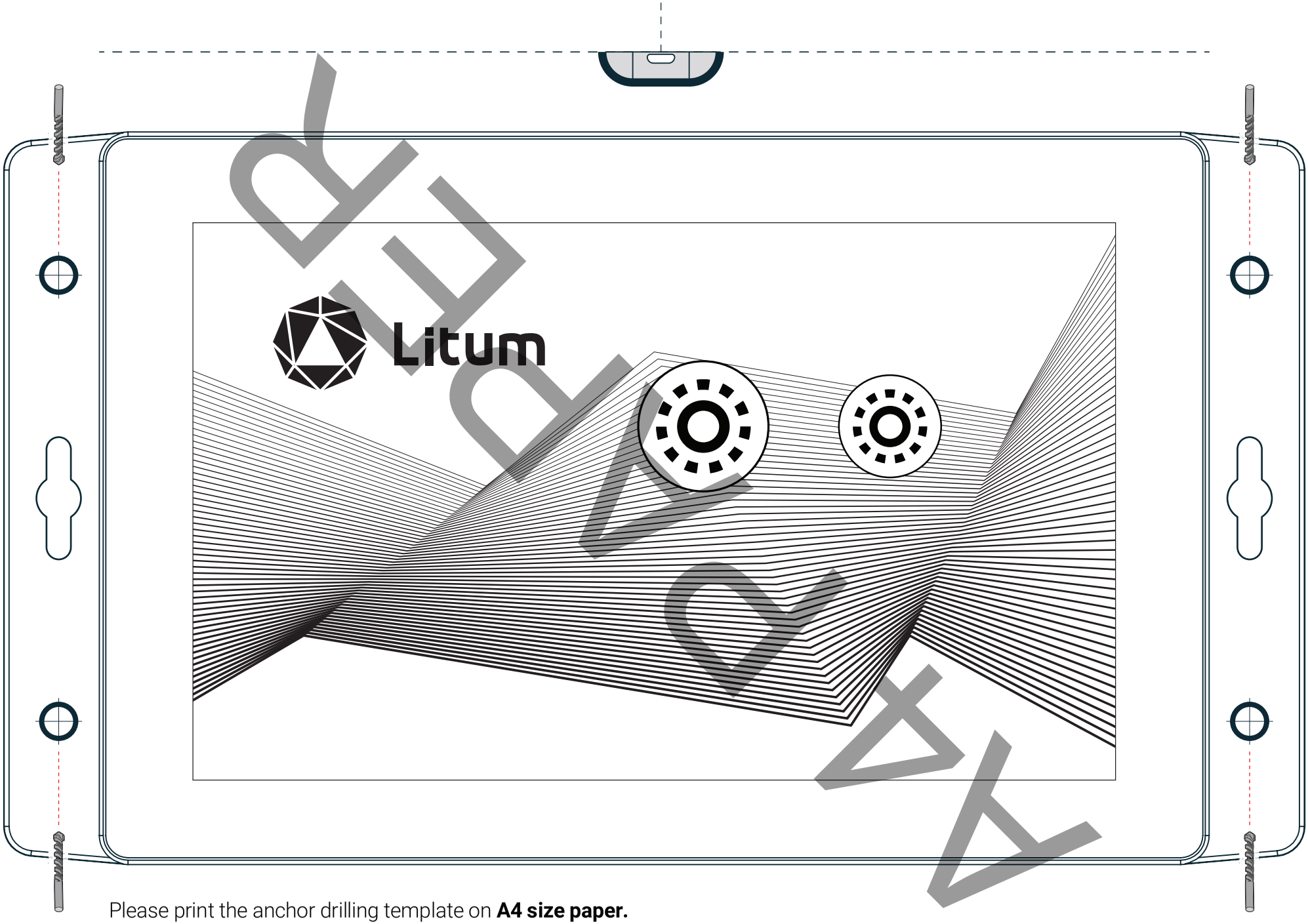

Please print the anchor drilling template on **A4 size paper.**

Please check that the **template printout aligns with Litum Anchor/Gateway Outdoors screw holes** before proceeding.

FCC Warning

This device complies with part 15 of the FCC Rules. Operation is subject to the following two conditions: (1) This device may not cause harmful interference, and (2) this device must accept any interference received, including interference that may cause undesired operation.

Any Changes or modifications not expressly approved by the party responsible for compliance could void the user's authority to operate the equipment.

Note: This equipment has been tested and found to comply with the limits for a Class B digital device, pursuant to part 15 of the FCC Rules. These limits are designed to provide reasonable protection against harmful interference in a residential installation. This equipment generates uses and can radiate radio frequency energy and, if not installed and used in accordance with the instructions, may cause harmful interference to radio communications. However, there is no guarantee that interference will not occur in a particular installation. If this equipment does cause harmful interference to radio or television reception, which can be determined by turning the equipment off and on, the user is encouraged to try to correct the interference by one or more of the following measures:

-Reorient or relocate the receiving antenna.

-Increase the separation between the equipment and receiver.

-Connect the equipment into an outlet on a circuit different from that to which the receiver is connected.

-Consult the dealer or an experienced radio/TV technician for help.

This equipment complies with FCC radiation exposure limits set forth for an uncontrolled environment. This equipment should be installed and operated with minimum distance 20cm between the radiator & your body.