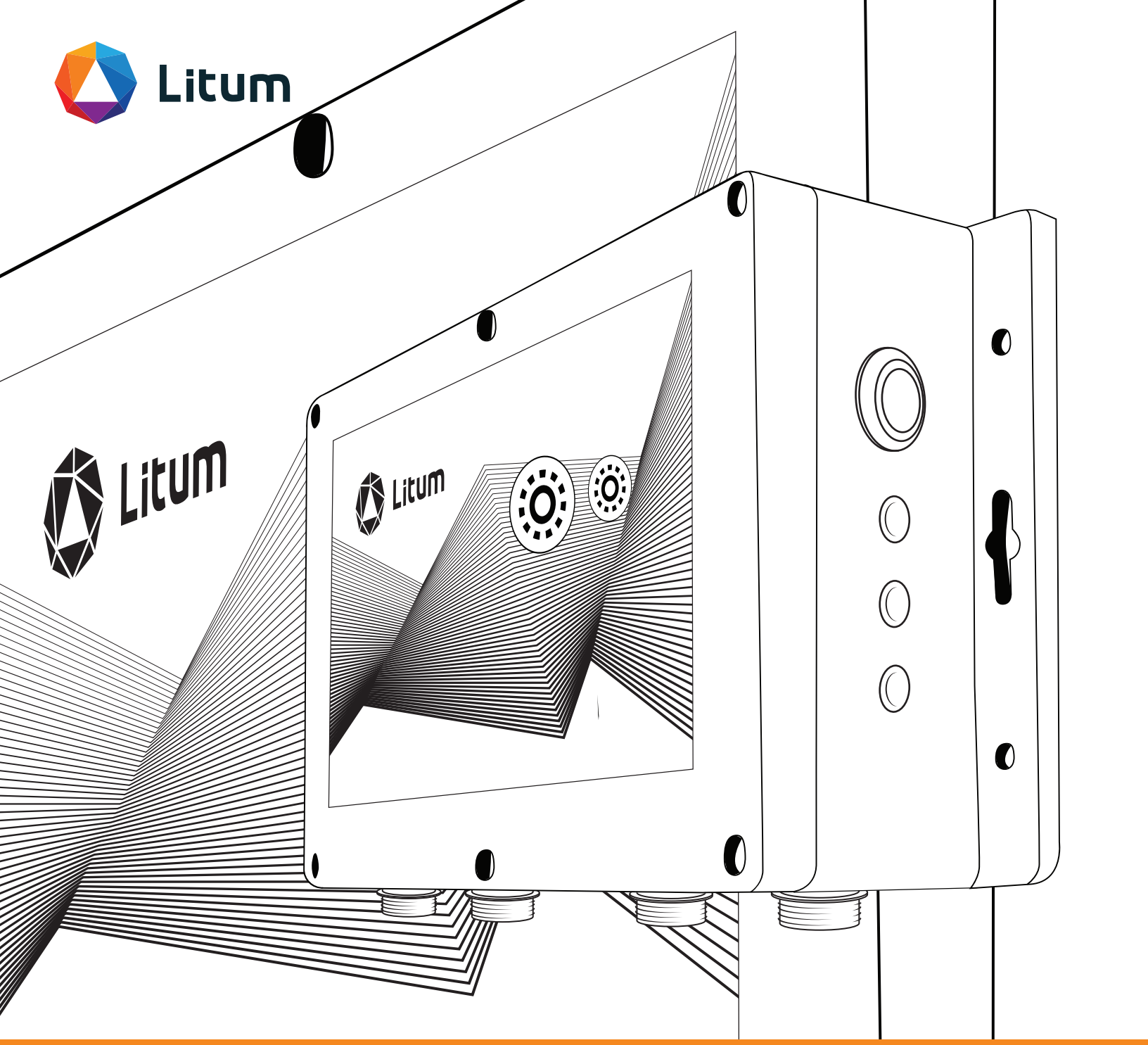

09.2020 - 1.100.M1

MOUNTING & OPERATING INSTRUCTIONS

200

ENDURANCE **GATEWAY**

Do you have all the tools needed?

1 M5 x 30 PANHEAD SCREWS x 4

2 WALL ANCHOR x 4

Make sure that you have the correct type of anchors for the wall that you're mounting the device (i.e: concrete, drywall)

Hammer

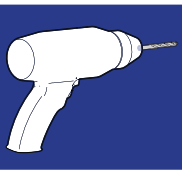
Drill

Screwdriver

Laser Meter

Tape Measure

Pencil

Bubble Level

Tape

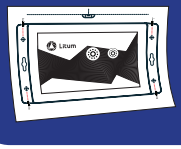
Template

INSTRUCTIONS

All instructions here are for Litum Anchor/Gateway Endurance referred to as "Anchor/ Gateway(s)" in the document.

⚠ CAUTION

The anchor/gateway is **not suitable for mounting on metal surfaces.** Make sure that you are mounting it on a non-metal surface such as concrete, plastic, drywall, etc.

⚠ CAUTION

The anchor/gateway has unique node IDs that are printed on their backside labels.

It is critical that you mount the anchor/gateway with the correct **node ID** at each location as instructed by Litum application engineering team.

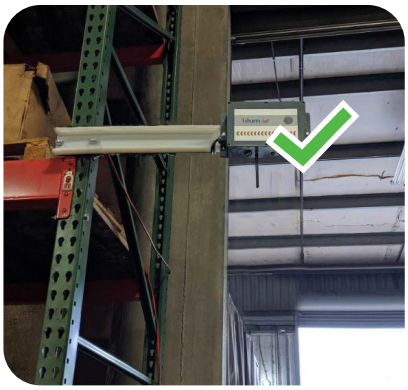

WHERE TO MOUNT

1 The anchor/gateway must be mounted **on walls, not on ceilings.**

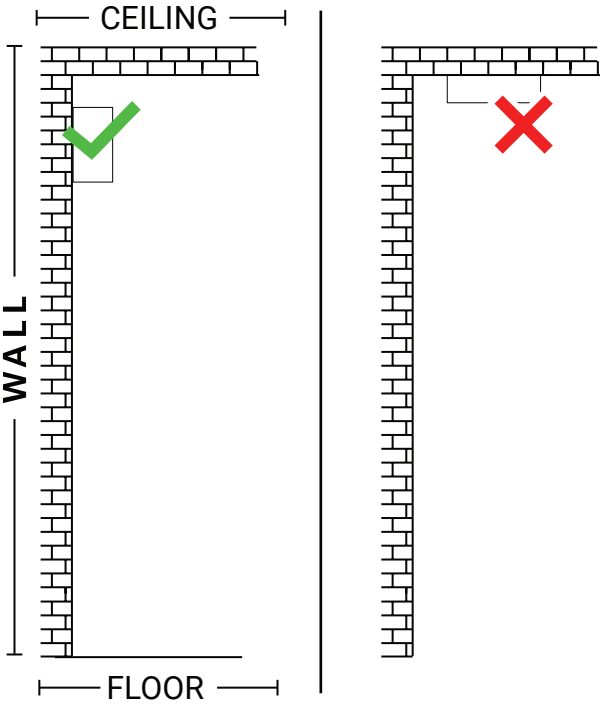

2 All anchors/gateways must be mounted consistenly to **the same height across the facility.**

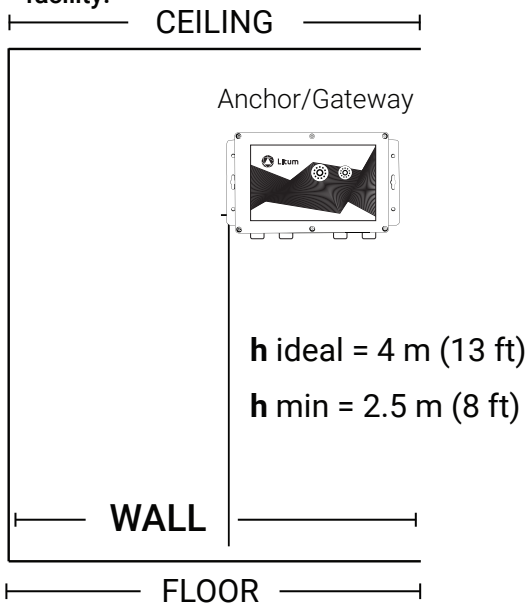

If it is required to install the anchor/gateway higher than 4m (13 ft), please consult Litum.

WHERE TO MOUNT

3 If you need to mount anchor/gateway close to a corner, make sure to stay away at least 50 cm (1.5 ft).

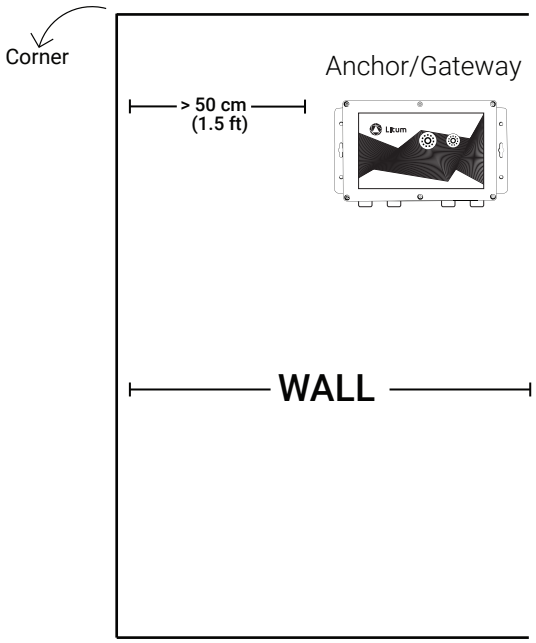

4 The anchor/gateway is a very sensitive locating device. For its optimal performance, it needs to be mounted **on the exact location** that is instructed by Litum application engineering team. When you find the correct location of the anchor/gateway, we recommend that you choose a fixed reference point (such as a corner, window, etc.) and take another measurement from there to double check its location. Please make sure that you are using a correctly scaled floor plan.

5 In cases where two anchors/gateways need to be mounted closely, make sure that they are **at least 2 m (6 ft) away from each other.**

6 Devices that transmit electromagnetic signals, such as **WiFi access points**, may have a negative impact on anchor/gateway performance. If you see such a device close to where the anchor/gateway is to be mounted, please consult with Litum application engineering team before you proceed.

HOW TO MOUNT

1 LOCATE & MARK

Print the anchor/gateway drilling template.
Use it with bubble level and place it on the wall.

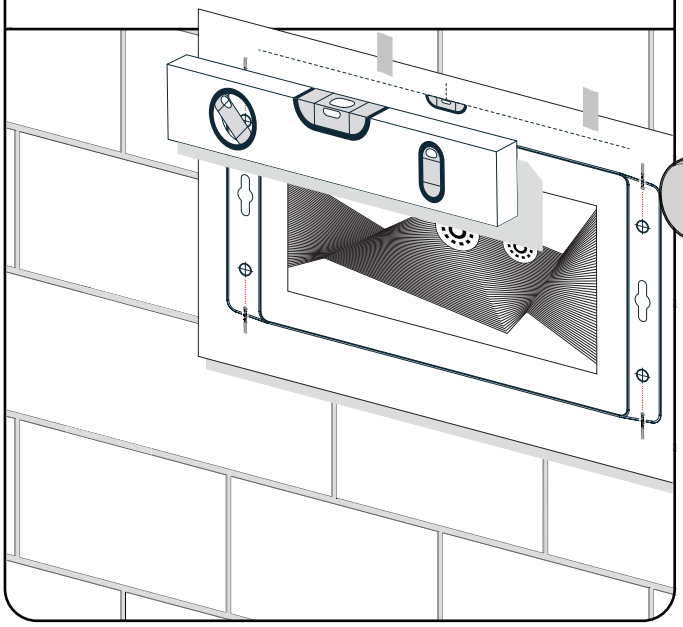

2 DRILL & INSERT WALL PLUGS

Drill the four holes on the template and insert wall plugs.

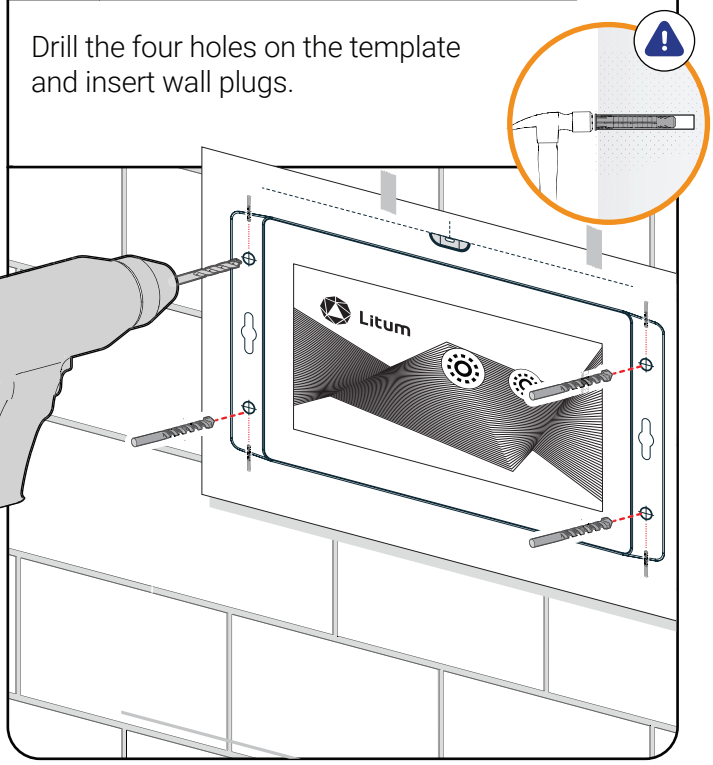

4 INSTALL SCREWS

Firmly install all screws until they are pulled flush against the plastic surface of the anchor. All screws **must be** firmly installed to prevent unwanted movement of the anchor. Ensure the device is securely fastened to the wall.

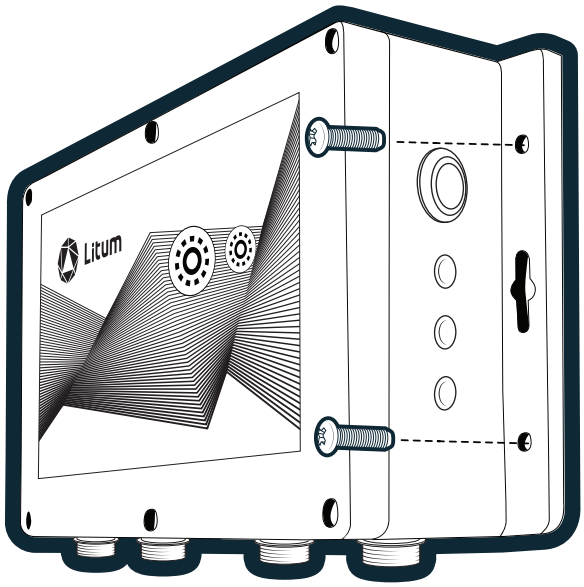

5A POWER CABLE CONNECTION

Disassemble connector as shown below. Connect the power cable and then reassemble the connector to complete. All components must be fastened properly to ensure water resistency.

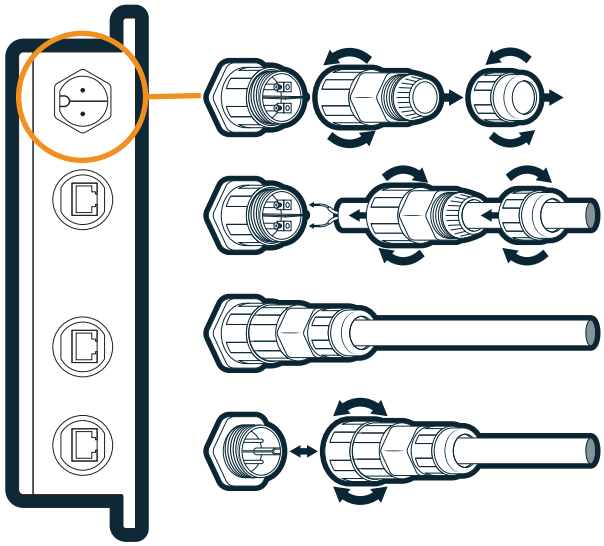

5B PLUG IN

You can connect the anchor/ gateway to AC or DC power outlet as shown here.

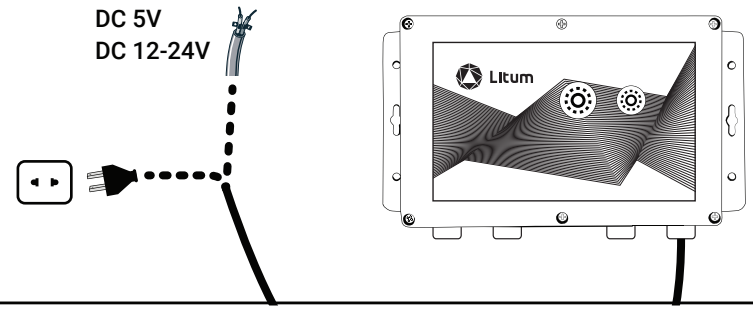

Make sure to use correct power outlet for your device. Failure to do so might result in explosion.

OPERATION

When the device is connected to a stable power supply, service LED should start to blink.

The service LED will light up and remain steady when the device is communicating with a server.

RF Comm LED indicates RF communication is active.

The device has an internal backup battery. Turn the backup battery switch on to ensure the device continues to work during power outage or emergencies. To turn off the device completely, the backup battery switch should be turned off.

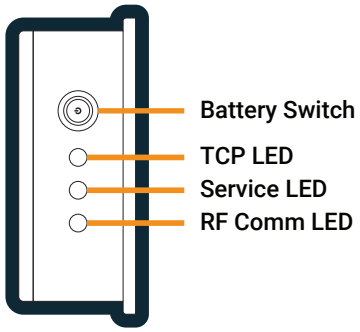

Devices with RS232 or RS485 communications can be connected to the device through the optional Aux Comm port. Please contact Litum for supported devices.

Digital input and relay output can be pushed through the optional I/O port. For details please contact Litum.

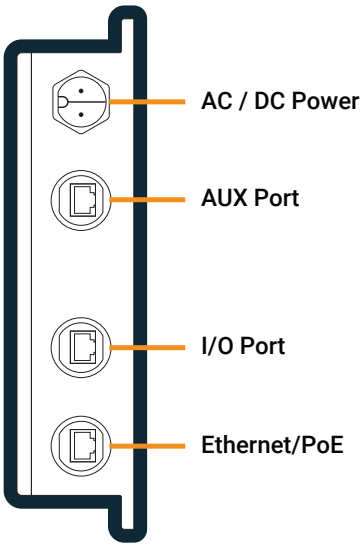

In case of emergencies that can be triggered by the system, the siren and the lights will provide alerts.

TCP LED will only be available if the device is a gateway and it will be constantly on. Network settings for the gateways will be done by Litum.

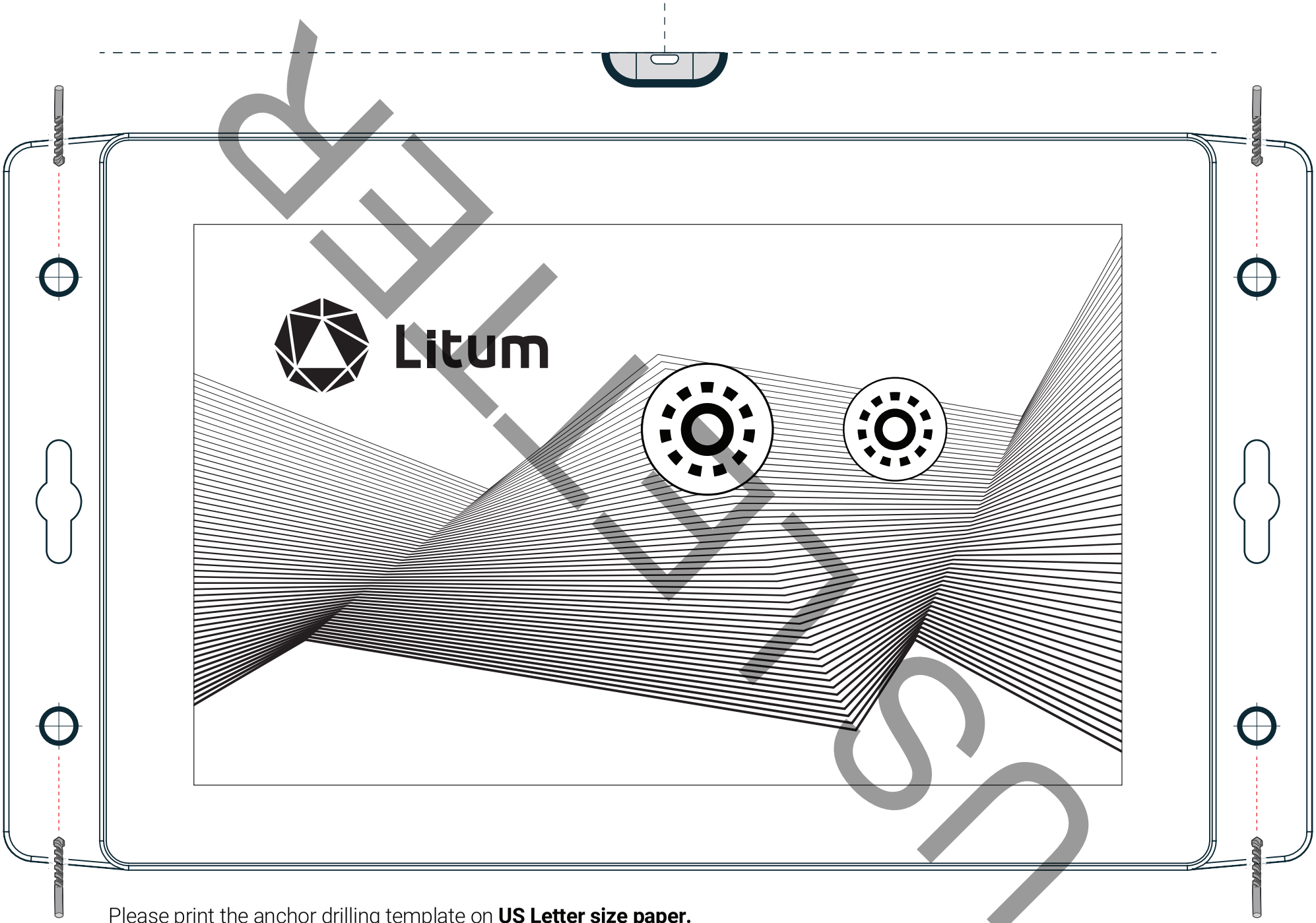

LETTER

Please print the anchor drilling template on **US Letter size paper.**

Please check that the **template printout aligns with Litum Anchor/Gateway Endurance screw holes** before proceeding.

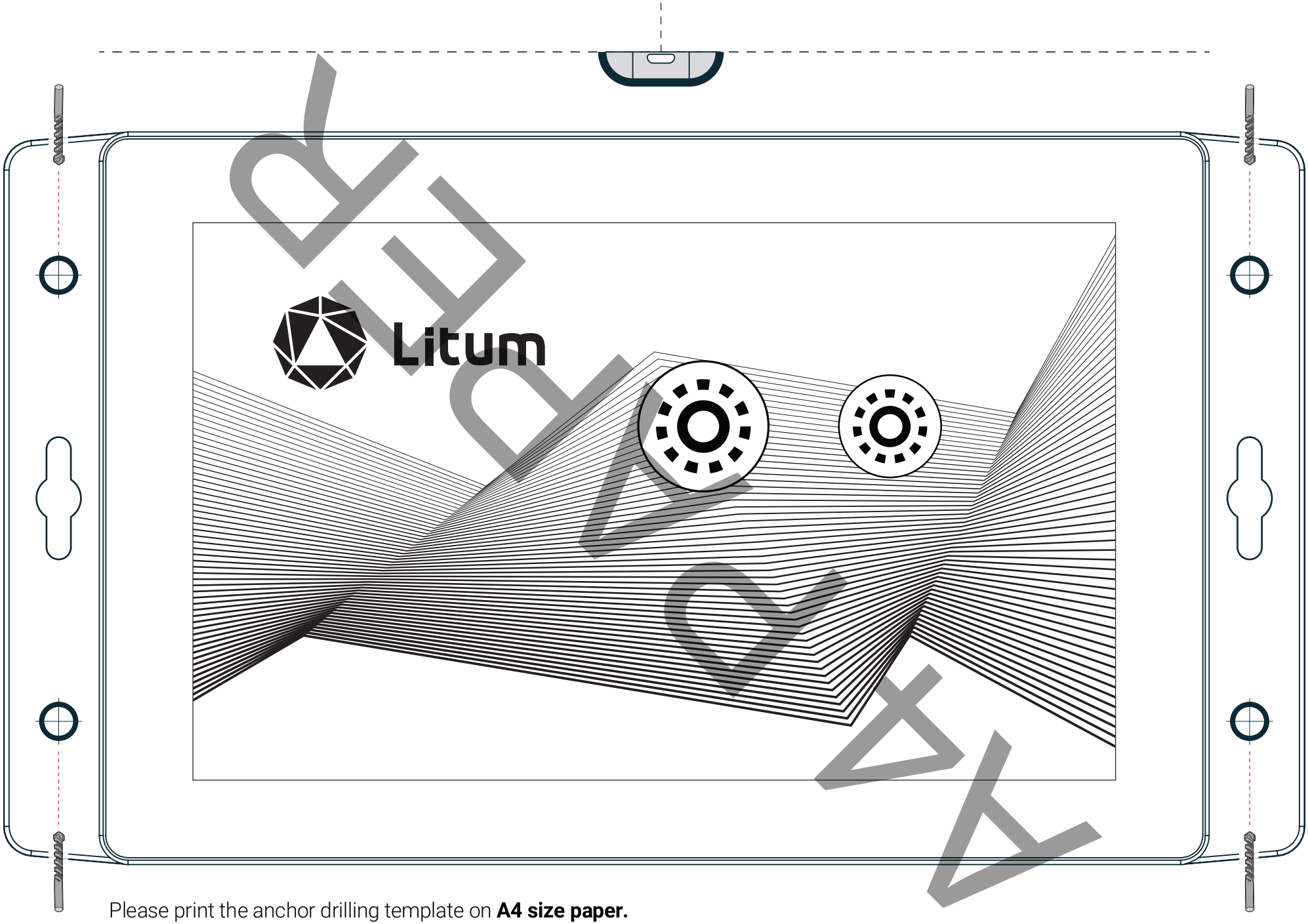

Please print the anchor drilling template on **A4 size paper.**

Please check that the **template printout aligns with Litum Anchor/Gateway Endurance screw holes** before proceeding.

LITUM LIMITED HARDWARE WARRANTY

This Limited Product Warranty ("Warranty") is an agreement between the buyer ("Buyer") and Lİtum Bilgi Teknolojileri San. Ve Dıs Tic. A.S ("Seller") applicable to hardware ("Product", "Products") provided by the Seller.

1. Seller warrants the Buyer that the Product will substantially conform to Seller's then-current published specifications for such Product. This limited warranty lasts one year from the date of shipment to Buyer and it is available worldwide.

2. If a Product is to be returned to Seller, Buyer shall, at its expense, return the Product in accordance with Seller instructions, including use of the Return Material Authorization (RMA) number assigned by the Seller, detailed description of the problem, and return shipping information including return address and contact person.

3. Any Product returned to Seller under this warranty should be packaged in a sturdy, outside shipping carton, to prevent damage in transit and should not contain any hazardous and forbidden materials.

4. Seller obligations under this limited warranty are: (a) subject to Buyer's compliance with Seller then- current RMA procedures; (b) subject to Buyer's written notice to Seller of a warranty claim during the applicable warranty period; and (c) limited to Products that are received by Seller no later than four weeks following the last day of the applicable warranty period and are determined by Seller to be covered by the warranty provided in these terms. Seller will make the final determination as to whether a Product is defective.

5. If Seller determines, after an examination of the returned Product, that a returned Product is not defective under the warranty, then Buyer will be notified, the Product will be returned at Buyer's expense and Buyer will pay for Seller for its examination and/or testing of by Seller at its rates then in effect. Seller may offer out- of-warranty repair services for Products at rates then in effect.

6. If Seller reasonably confirms that a Product is defective under the warranty and not covered by the exclusions below, then Seller shall, at its option and expense and in accordance with these terms, either: (a) repair the Product; (b) replace the Product; or (c) issue a credit or refund for the amount paid by Buyer for the Product.

7. If Seller elects to repair or replace a Product, Seller will have 20 business days to repair the Product or provide a replacement.

8. A repair/replacement under this warranty is free of charge. The warranty repair does not restart the warranty period; all Products repaired or replaced under warranty shall be warranted for the remainder of the warranty period or 90 days. Repaired or replaced Products may contain used or refurbished parts. Replaced parts or Products become Seller property.

9. The repaired/replaced Product is returned to the Buyer at Seller expense. Seller may not be held responsible for any legal fees, taxes and/or handling fees that can be associated with shipment of the Product to and from Seller.

LITUM LIMITED HARDWARE WARRANTY

10. The warranty covers all defects of the Product during the warranty period due to faults in workmanship or material at the shipping date. The warranty is limited to repair and/or replacement and does not include any other obligations including but not limited to incidental or consequential damages. The warranty is not valid if the Product has been misused, installed and/or used contrary to the instruction manual.

11. Seller has the right to render the warranty null and void in the following cases:

a. If the Product has been altered or modified.

b. If the Product has been attempted to be opened in order to modify the enclosure. This will degrade the ingress protection of the Product which may cause dust and water ingress.

c. If the Product has been attempted to be repaired by non-authorized service without prior authorization by the Seller.

d. If the Product has been connected to an improper power supply (amps, voltage, frequency).

e. If the Product has sustained damage due to external influences or foreign substances including but not limited to the following:

i. if the Product has been dropped or has marks of mechanical or chemical damage,

ii. if the Product has been damaged as a result of fire or natural disasters,

iii. if the Product has been damaged as a result of liquids or other substances getting inside,

iv. if the Product original identification markings (trademark, serial number) have been modified, rubbed off, removed or is illegible, or has been programmatically deleted (for devices with unique serial number).

f. If the Product was used with non-approved accessories and/or parts.

Product Data Sheet

GATEWAY SERIES

LITUM® GATEWAY ENDURANCE

Litum
Transform. Reach beyond.

Model No. 200

Litum Gateway Series products are fundamental to the mesh network required to track, monitor and locate staff, equipment and assets. Litum Anchor Endurance is specifically engineered for optimum performance in rough environments with a robust design.

Litum RTLS system allows gateways to work together seamlessly with anchors to collect and transfer high accuracy location information.

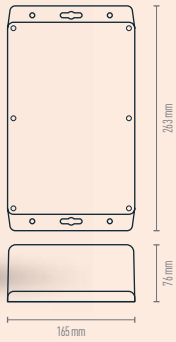

Features

- Optimized for demanding environments
- Back-up battery
- Built-in alarm siren
- Optional sensors: temperature, humidity, and gas

Benefits

- Wide area coverage
- Highly accurate location detection
- Automated network discovery and connection.
- Operates during power outages w/ back-up battery.
- One-time license fee
- No interference with other RF equipment

Technical Specifications

General	Use	Demanding Environments
Physical	Dimensions	263 x 165 x 76 mm (10.4 x 6.5 x 3.0 in)
	Weight	800 g (28.2 oz)
	Operating Temperature	-10 / +60°C
	Relative Humidity	0 to 95% non-condensing
	Environmental Protection	IP65
	Vibration Resistance	3G
	Casing	ABS
	Remote Firmware Upgrade	Yes
	Power/Battery	PoE
	AC Supply	110 V, 220 V

Physical	DC Supply	12 - 24 V
	Back-up Battery	Li-ion 2900 mAh
	Expected Battery Life	10 Hours
Operating	Aux. Com. Interface	Optional (RS232, RS485)
	I/O Interface	Optional (Dry Contact, Analog and Digital Input / Relay Output)
	LED Indicators	Power, Service
	Optional Add Ons	AUX sensor - Temperature, Humidity, Light, Multiple Gas Sensors
	Frequency	2.432 GHz SRD & 6.4896 GHz (UWB)
Other	Certification	FCC, IC

Supporting Document List

- Installation Manual
- Product Warranty
- Certifications

FCC Warning

This device complies with part 15 of the FCC Rules. Operation is subject to the following two conditions: (1) This device may not cause harmful interference, and (2) this device must accept any interference received, including interference that may cause undesired operation.

Any Changes or modifications not expressly approved by the party responsible for compliance could void the user's authority to operate the equipment.

Note: This equipment has been tested and found to comply with the limits for a Class B digital device, pursuant to part 15 of the FCC Rules. These limits are designed to provide reasonable protection against harmful interference in a residential installation. This equipment generates uses and can radiate radio frequency energy and, if not installed and used in accordance with the instructions, may cause harmful interference to radio communications. However, there is no guarantee that interference will not occur in a particular installation. If this equipment does cause harmful interference to radio or television reception, which can be determined by turning the equipment off and on, the user is encouraged to try to correct the interference by one or more of the following measures:

-Reorient or relocate the receiving antenna.

-Increase the separation between the equipment and receiver.

-Connect the equipment into an outlet on a circuit different from that to which the receiver is connected.

-Consult the dealer or an experienced radio/TV technician for help.

This equipment complies with FCC radiation exposure limits set forth for an uncontrolled environment. This equipment should be installed and operated with minimum distance 20cm between the radiator & your body.

Endurance Gateway belongs to FCC Part 15.517 indoor UWB systems.
“This equipment may only be operated indoors. Operation outdoors is in violation of 47 U.S.C. 301 and could subject the operator to serious legal penalties.”

IC Warning

This device complies with Industry Canada’s licence-exempt RSSs. Operation is subject to the following two conditions:
(1) This device may not cause interference; and
(2) This device must accept any interference, including interference that may cause undesired operation of the device.

This equipment complies with IC radiation exposure limits set forth for an uncontrolled environment. This equipment should be installed and operated with minimum distance 20cm between the radiator & your body.

Cet appareil est conforme aux CNR exemptes de licence d'Industrie Canada . Son fonctionnement est soumis aux deux conditions suivantes :
(1) Ce dispositif ne peut causer d'interférences ; et
(2) Ce dispositif doit accepter toute interférence , y compris les interférences qui peuvent causer un mauvais fonctionnement de l'appareil.

Ce matériel est complété par une exposition de rayonnements IC pour un environnement naturel. Ce matériel doit être installé et se faire avec une distance minimale de 20cm entre les radiateurs et les autresYour body shop.