LED Functions:

Slow on/off Blue - Device is on and in stand-by mode
Solid Blue - Device is on and in charging mode.
Red - Error Mode:

- **Phone not aligned with charging coil under ARC logo -** Align phone
- **Foreign Object Detected -** Remove metal from near charger.
- **Phone is too close -** Move phone greater than 20mm (0.78") away.
- **Power Adapter Issue -** Only use original plug pack.
- **NON-Compatible Phone -** Upgrade phone.

Common Faults & Troubleshooting

My phone isn't charging or is charging slowly.
Generally the wireless charging coil is located in the middle of a phone, so please make sure your phone is placed over the center of the resontor pad. If the phone case is too thick or has metal/magnetic accessories, your phone may not charge.

Is the table too thin or too thick?
ARC-H (LD) is designed for worksurfaces with surfaces 20-50mm (0.78"-2") thick
FCC requirements in USA limit the maximum worksurface thickness to 30mm (1.18").

Will my device charge with metal objects on the charging surface?
Devices won't charge if there's a metal object on the charging surface. Remove the object and allow several seconds for the device to begin charging again.

Can ARC-H charge other wireless charging devices?
Due to the coils size, ARC-H will only charge your compatible mobile phones.

The phone will not charge when I place the phone directly on the charger, to check it works before installation?
The charger will not charge a phone unless it is separated (and aligned) from the phone by **at least 20mm(0.78").**

The magnets will not attract each other through my desk?
The magnets only work up to 25mm(1"). Either route the desk underside to <25mm (1") thick or call to purchase the Electronic Alignment Guide.

Alignment

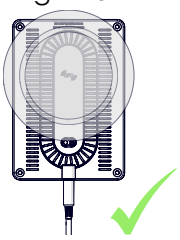

The ARC logo identifies the coil center which must be aligned with the Resonator Pad

Pad fitted over the centre of the charger - WILL NOT WORK

The charging coil is Off-Center, the alignment guide MUST be used to guarantee accuracy

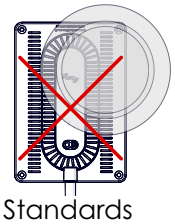

Pad misaligned - WILL NOT WORK

The alignment guide MUST be used to guarantee accuracy

Standards

- Qi Compatible
- FCC part 15 (when installed under surfaces 20-30mm (0.78"-1.18") thick)
- IEC62386-1:2014 +A11:2017
- EN50655:2017
- ETSI EN 301 489-1 V2.2.3 (2019-11)
- ETSI EN 301 489-3 V2.1.1 (2019-03)
- ETSI EN 303 417 V1.1.1 (2017-09)

Precautions

- Follow installation guidelines overleaf for optimum charge.
- Keep metal objects (keys, coins, credit cards etc) away from charging area. They may activate foreign object detection (FOD) and ARC-H will not operate.
- Do not use phone cases with magnet or metallic blocks when charging.
- Charger will only charge through non-metallic surfaces.
- Install further than 35mm from metal objects.
- Do not expose ARC-H to liquids.
- Use only supplied 19V power supply with correct plug attachment for country of use.
- Complies with the following Safety and EMC standards.

FCC Statement

This device complies with Part 15 of the FCC Rules. Operation is subject to the following two conditions:
(1) this device may not cause harmful interference, and
(2) this device must accept any interference received, including interference that may cause undesired operation.

Changes or modifications not expressly approved by the party responsible for compliance could void the user's authority to operate the equipment.

NOTE: This equipment has been tested and found to comply with the limits for a Class B digital device, pursuant to part 15 of the FCC Rules. These limits are designed to provide reasonable protection against harmful interference in a residential installation. This equipment generates uses and can radiate radio frequency energy and, if not installed and used in accordance with the instructions, may cause harmful interference to radio communications. However, there is no guarantee that interference will not occur in a particular installation. If this equipment does cause harmful interference to radio or television reception, which can be determined by turning the equipment off and on, the user is encouraged to try to correct the interference by one or more of the following measures:
- Reorient or relocate the receiving antenna.
- Increase the separation between the equipment and receiver.
- Connect the equipment into an outlet on a circuit different from that to which the receiver is connected.
- Consult the dealer or an experienced radio/TV technician for help

RF Exposure Warning Statements:
This equipment complies with FCC radiation exposure limits set forth for an uncontrolled environment. This equipment shall be installed and operated with minimum distance 20cm between the radiator & body.

oeelectrics

OE Head Office
www.oeelectrics.co.uk
+44 (0) 1924 367255
sales@oeelectrics.co.uk

OE GmbH
www.oeelectrics.de
+49 (0)2261 958 3001
info@oeelectrics.de

OE Inc
www.oeelectrics.com
+1 (844)-927-0600
sales@oeelectrics.com

oeelsafe

www.oeelsafe.com.au
+61 2 9454 7500
sales@oeelsafe.com.au

Arc-H-User-Manual-Universal-2020(LD)-v3

oe arcH LD

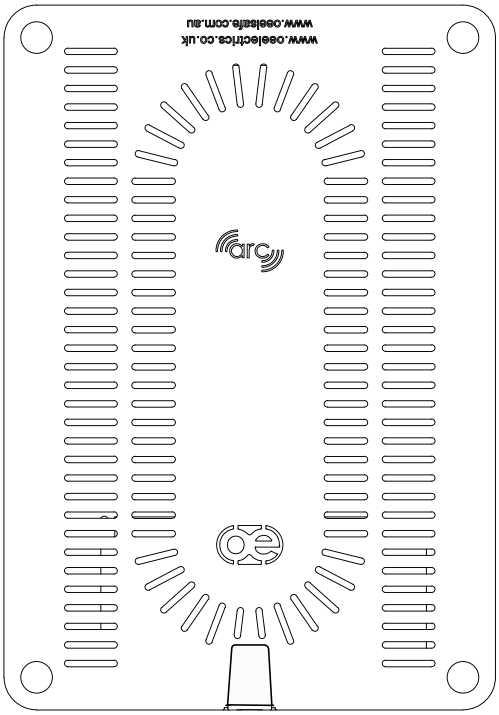

Through Surface Wireless Charging

ADVANCED RESONANT CHARGER

Arc-H User Manual Universal 2020 (LD) v3

ARC-H (LD) is designed for surfaces 20-50mm (0.78-2") thick. However, for USA, FCC compliance requires ARC-H to be fitted to worksurfaces 20-30mm (0.78-1.18") only

1 Attract magnets

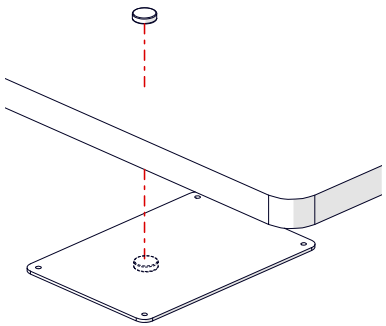

2 Move guide to your desired location

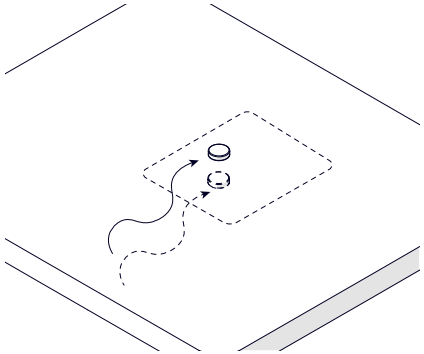

3 Adjust to ensure correct clearance and mark screw holes

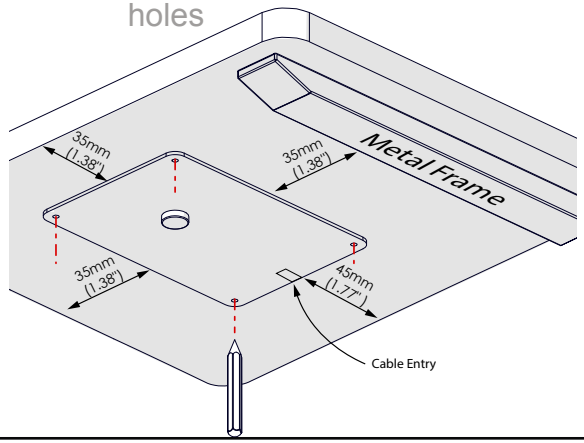

4 Place resonator pad where magnet indicated

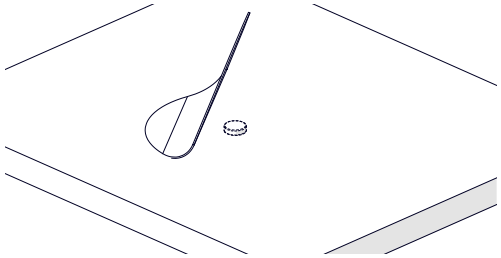

5 Fit ARC-H (LD) with tape (provided) or screws

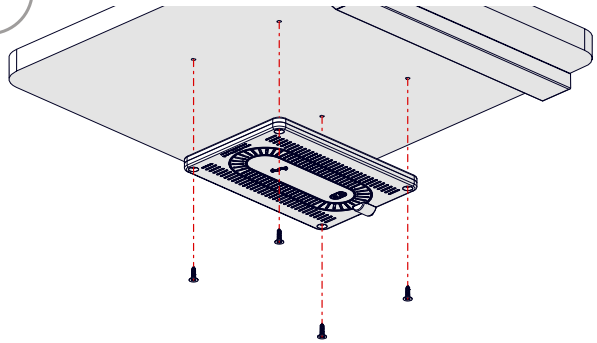

6 Connect power and check for blue LED

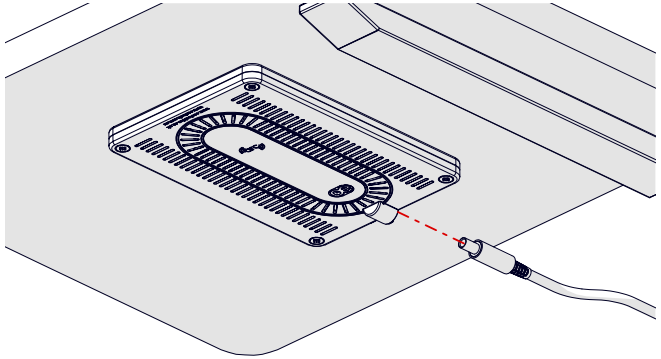

7 Place phone on the pad and charge

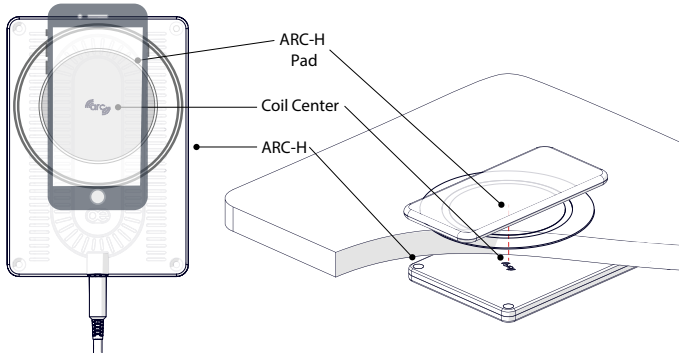

The ARC logo identifies the coil center which must be aligned with the resonator pad

Contents:

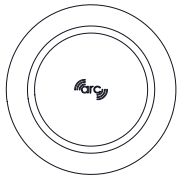

1 x Resonator Pad

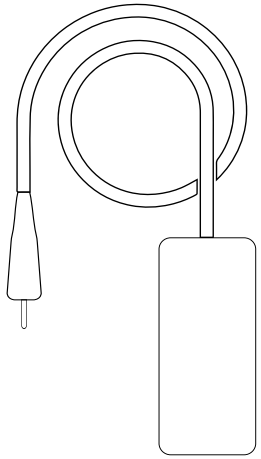

Power Adapter

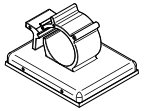

3x cable clips

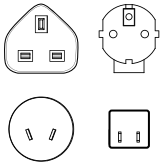

Interchangeable plug attachments

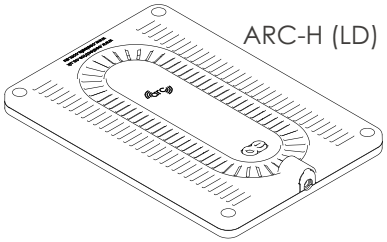

ARC-H (LD)

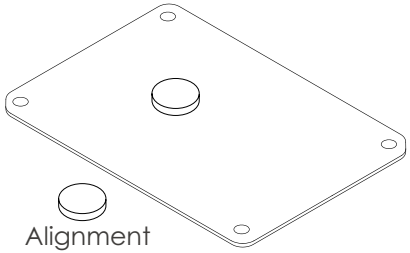

Alignment Magnet

Alignment Template