ELECTRIC UNDER DESK ELLIPTICAL

SF-E3959

USER MANUAL

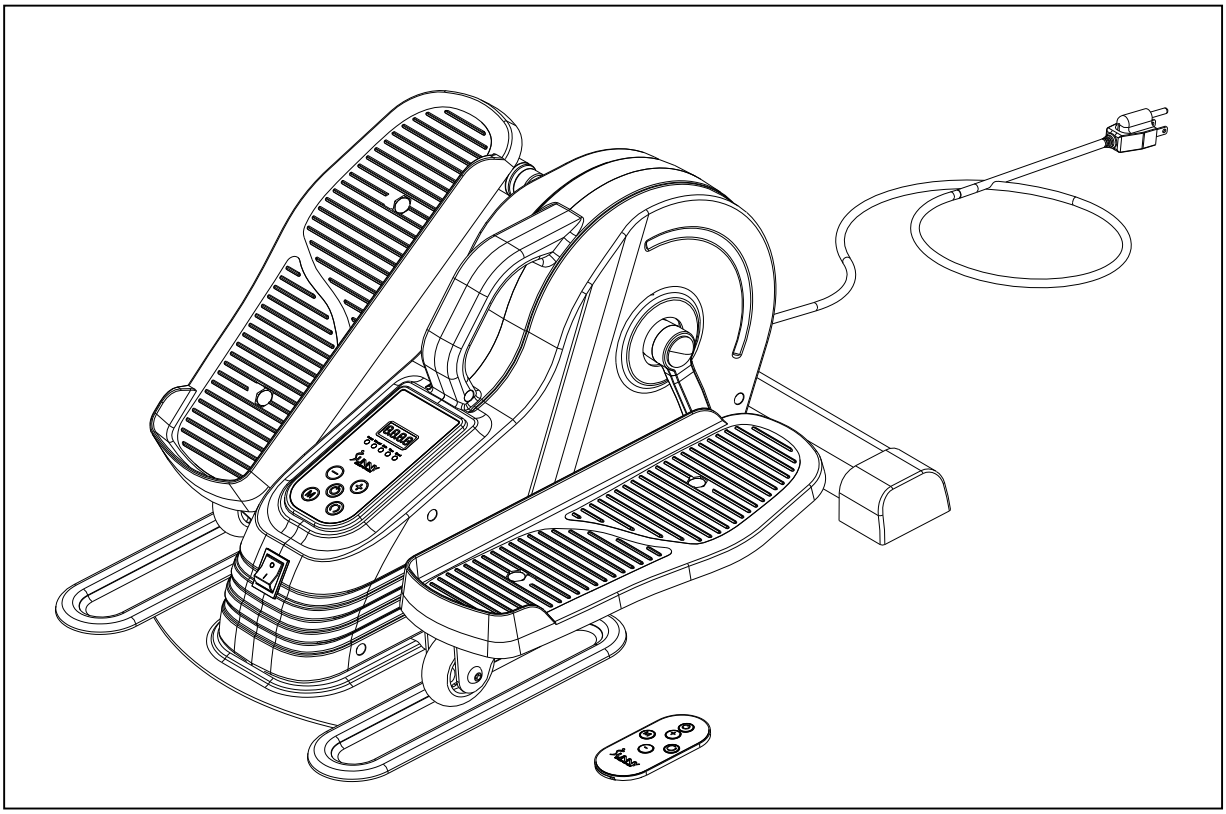

IMPORTANT! Please retain owner's manual for maintenance and adjustment instructions. Your satisfaction is very important to us, **PLEASE DO NOT RETURN UNTIL YOU HAVE CONTACTED US**: support@sunnyhealthfitness.com or 1- 877 - 90SUNNY (877-907-8669).

WWW.SUNNYHEALTHFITNESS.COM

IMPORTANT SAFETY INFORMATION

When using an electrical appliance, basic precautions should always be followed, including the following:

Read all instructions before using this appliance.

DANGER – To reduce the risk of electric shock:

1. Always unplug this appliance from the electrical outlet immediately after using and before cleaning.

WARNING – To reduce the risk of burns, fire, electric shock, or injury to persons:

1. To reduce the risk of electric shock, this appliance has a polarized plug (one blade is wider than the other). This plug will fit in a polarized outlet only one way. If the plug does not fit fully in the outlet, reverse the plug. If it still does not fit, contact a qualified electrician to install the proper outlet. Do not change the plug in any way.
2. This product's rated voltage is 110V, rated power is 220W, 30 min.
3. An appliance should never be left unattended when plugged in. Unplug from outlet when not in use, and before putting on or taking off parts.
4. Do not stand on the elliptical, only use the elliptical while sitting.
5. Close supervision is necessary when this appliance is used by, on, or near children, invalids, or disabled persons. Keep children away from appliance. This is for adult use only.
6. Use this appliance only for its intended use as described in this manual. Do not use attachments not recommended by the manufacturer.
7. Never operate this appliance if it has a damaged cord or plug, if it is not working properly, if it has been dropped or damaged, or dropped into water. Return the appliance to a service center for examination and repair.
8. Do not carry this appliance by supply cord or use cord as a handle.
9. Keep the cord away from the heated surfaces.
10. Never operate the appliance with the air openings blocked. Keep the air openings free of lint, hair, and the like.
11. Never drop or insert any object into any opening.
12. Do not use outdoors.
13. Do not operate where aerosol (spray) products are being used or where oxygen is being administered.
14. To disconnect, turn all controls off, then unplug from outlet.
15. To reduce the risk of injury, place the appliance on a flat, horizontal, and stable surface. Do not place or use the appliance on a slippery surface.
16. To reduce the risk of injury, do not use the appliance with wet shoes, wet feet, or socks.
17. To reduce the risk of injury, do not use the appliance if the surface is wet. If the appliance surface becomes wet, dry the surface before using.
18. Turn off the power after each use. After using or before cleaning the appliance, unplug the power supply from the outlet.
19. Do not cover while using, to avoid motor overheating and cause malfunction or damage.
20. Be aware how you are feeling. If you feel uncomfortable or experience any adverse symptoms, stop the using the appliance immediately.
21. Do not use the appliance if it is damaged or defective.
22. This appliance is not suitable for therapeutic use. Do not use with other medical electronic equipment, such as pacemakers or EKG machines.
23. Do not use the appliance in wet or dusty environment. Do not use in humid environment, such as

bathroom.

24. Keep the appliance away from direct sunlight.
25. Do not operate the appliance with wet hands.
26. Do not allow water and other liquids to touch control switch.
27. Do not place the power cord under the appliance or any heavy object.
28. Do not wind the power cord around the appliance. That could damage the power cord, cause electric shock or electrical fire.
29. If the power plug is loose, do not use the appliance.
30. If there is a power surge during use, stop using the appliance. Sudden restoration of power could cause injury to you.
31. Consult your physician before use, especially if you have any medical conditions such as diabetes.

SAVE THESE INSTRUCTIONS

Caution: The user is cautioned that changes or modifications not expressly approved by the party responsible for compliance could void the user's authority to operate the equipment.

This device complies with Part 15 of the FCC Rules. Operation is subject to the following two conditions: (1) this device may not cause harmful interference, and (2) this device must accept any interference received, including interference that may cause undesired operation.

NOTE: This equipment has been tested and found to comply with the limits for a Class B digital device, pursuant to Part 15 of the FCC Rules. These limits are designed to provide reasonable protection against harmful interference in a residential installation. This equipment generates, uses and can radiate radio frequency energy and, if not installed and used in accordance with the instructions, may cause harmful interference to radio communications. However, there is no guarantee that interference will not occur in a particular installation.
If this equipment does cause harmful interference to radio or television reception, which can be determined by turning the equipment off and on, the user is encouraged to try to correct the interference by one or more of the following measures:
-- Reorient or relocate the receiving antenna.
-- Increase the separation between the equipment and receiver.
-- Connect the equipment into an outlet on a circuit different from that to which the receiver is connected.
-- Consult the dealer or an experienced radio/TV technician for help.

FCC Radiation Exposure Statement
This equipment complies with FCC radiation exposure limits set forth for an uncontrolled environment. This transmitter must not be co-located or operating in conjunction with any other antenna or transmitter.

EXPLODED DIAGRAM

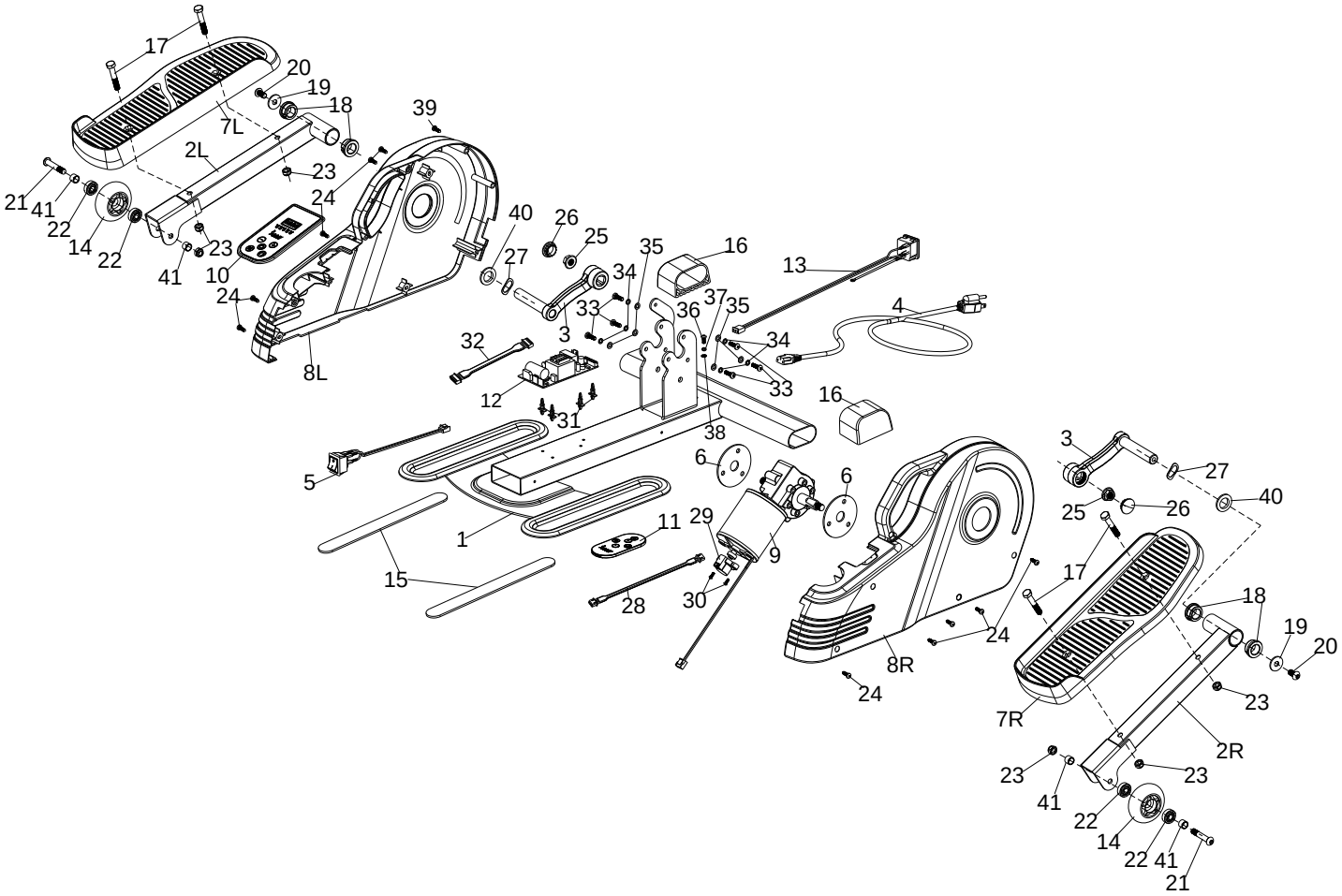

PARTS LIST

No.	Description	Spec.	Qty		No.	Description	Spec.	Qty
1	Main Frame		1		21	Hex Bolt	M8*45*15	2
2R	Pedal Frame (R)		1		22	Bearing		4
2L	Pedal Frame (L)		1		23	Nylon Nut	M8	6
3	Crank		2		24	Screw	ST4.2*15	10
4	Power Cable		1		25	Flange Nut	M10	2
5	Power Switch		1		26	End Cap		2
6	Rubber Pad		2		27	Rubber Washer		2
7L/R	Pedal		2		28	3P data line		1
8L/R	Belt Cover		2		29	Sensor		1
9	Motor		1		30	Screw	M3x8	2
10	Control panel		1		31	Fixing bolt		4
11	Remote Control		1		32	6P data line		1
12	Controller		1		33	Screw	M5x16	6
13	Outlet		1		34	Spring Washer	Φ2.7*Φ4.2*1.1	6
14	Slide Wheel		2		35	Flat Washer	Φ5.5*Φ10*1	6
15	Silicone Pad		2		36	Screw	M4x10	1
16	End Cap		2		37	Spring Washer	Φ2.2*Φ3.4*0.8	1
17	Bolt	M8*45*15	4		38	Non-Slip Pad		1
18	Alloy Wrap		4		39	Screw	ST3.5*15	1
19	Flat Washer	Φ8.2*Φ25*1.5	2		40	Flat Washer	Φ16.2xΦ28x1.2	2
20	Screw	M8*16	2		41	Sleeve		4

Ordering Replacement Parts (U.S. and Canadian Customers only)

Please provide the following information in order for us to accurately identify the part(s) needed:

- ✓ The model number (found on cover of manual)
- ✓ The product name (found on cover of manual)
- ✓ The part number found on the “EXPLODED DIAGRAM” and “PARTS LIST” (found near the front of the manual)

Please contact us at support@sunnyhealthfitness.com or 1- 877 - 90SUNNY (877-907-8669).

OPERATING INSTRUCTIONS

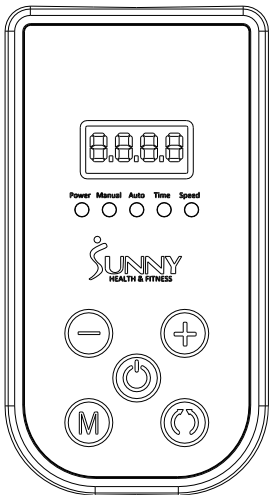

ELECTRICAL INFORMATION

- Rated Voltage: 110V

SAFETY NOTES

- Do not stand on cycle. Only use while seated in a
- chair. If cycle is tilted over 45 degrees, it will auto stop.
- If cycle detects problems during exercise, it will auto stop within 10 seconds.

REMOTE CONTROL FUNCTION KEYS

POWER	Power on and off
Mode	Changes between automatic and manual
Direction	Changes the direction forward or back ward
Speed+-	Select key for increasing or decreasing speed (18 speed levels)

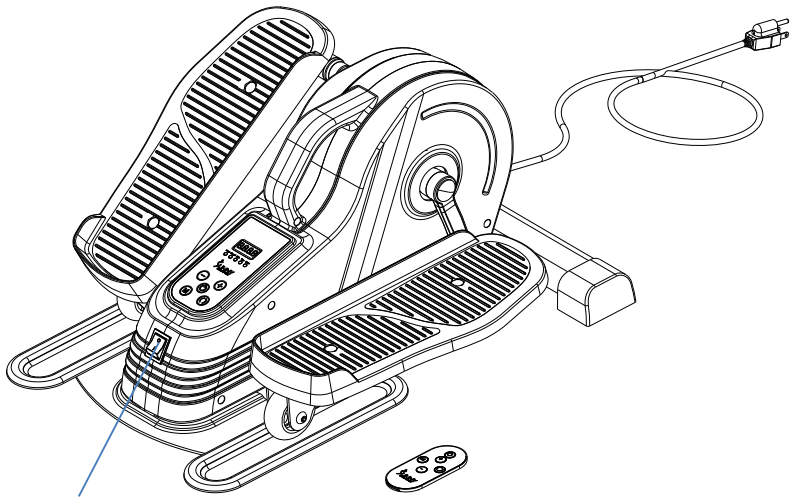

Power switch

1. Plug in the power. Turn on the power switch. Cycle beeps and LED display shows “OFF“. It is in standby mode.
2. Press the POWER button on the remote control to start the cycle, it works from manual mode. Display shows L1. Press the POWER button longer than 5 seconds, the cycle will clear all the LED display information.
3. Under the manual mode, press the SPEED + button to increase the speed from L1 to L18. Or press the SPEED – button to decrease the speed from L18 to L1.
4. Under the manual mode, press the DIRECTION button to change the forward or backward direction.
5. Under the manual mode, the LED display will show next information after 6 seconds from speed level to time, from time to RPH, then from RPH to speed level. It stops after 30minutes.
6. Press the Mode button on the remote control to change the mode from manual mode to auto mode P1, press again from P1 to P2 mode, press again from P2 to P3, then press again from P3 back to the manual mode.
7. Under the automatic mode, there’re P1/P2/P3 modes included. All the modes will include speed increase stage, reverse direction, speed decrease stage, reverse direction, speed increase stage, keep repeating.

   P1 will have 2 different speed level, P2 will have 9 different speed level, P3 will have 18 different speed level. Each speed level will continue 15seconds before change to next speed level. For example, P1 working logical:

   Speed Level 1 forward direction 15seconds, Speed level 2 forward direction 15seconds, Speed level 2 backward direction 15seconds, Speed level 1 backward direction 15seconds, then back to Speed Level 1 forward direction 15seconds, and keep repeating.
8. After each 30minutes running, the circle will stop automatically and the LED display will show “OFF”.

NOTE:

After finish using, pls turn off the switch and disconnect the power.

BATTERY REPLACEMENT

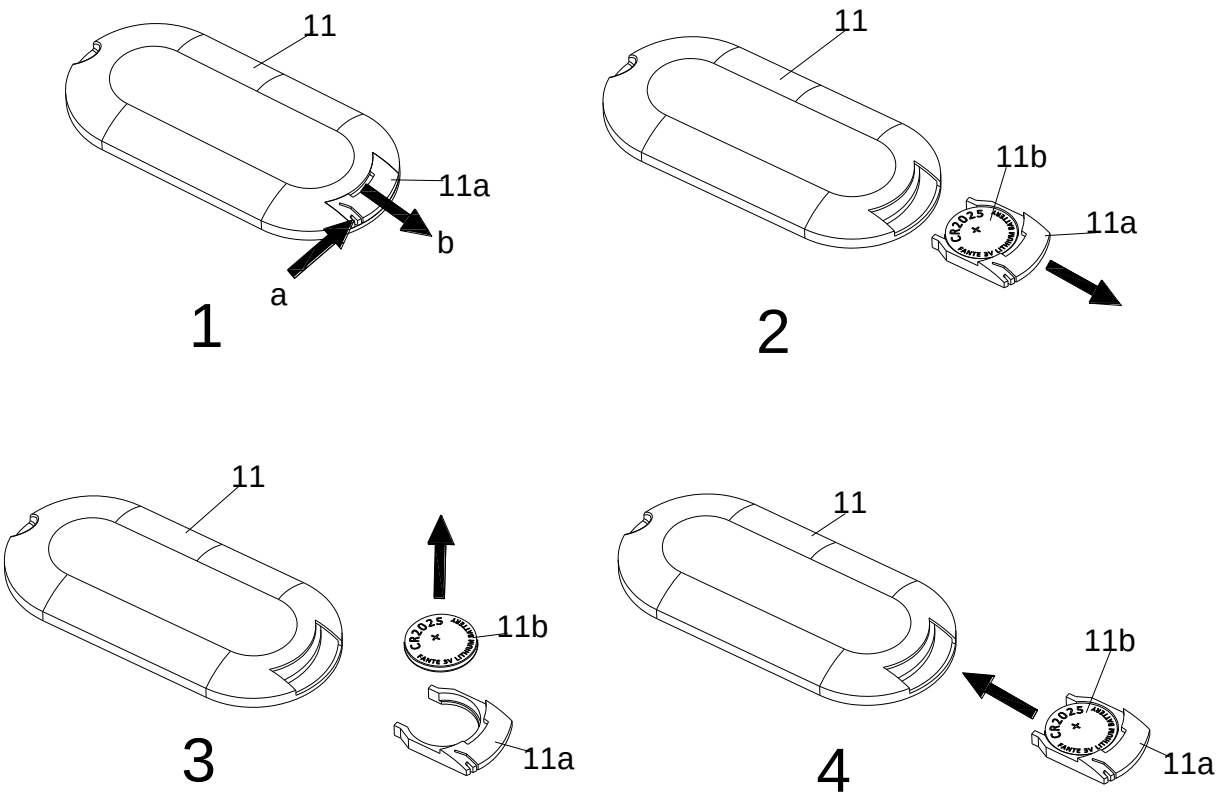

Press the arrow to squeeze point A of battery seat (NO.11A), and buckle point B of battery seat (NO.11A), and pull out b attery seat (NO.11A).Take out the old battery (NO.11B), put the new battery into the battery seat (NO.11A), and finally i nsert it into the Romote Control（NO.11）.

CONNECT WITH US

FOR FITNESS ARTICLES, VIDEOS & WORKOUTS

@SUNNYHEALTHANDFITNESS

@SUNNYHEALTHFITNESS

@SUNNYHEALTHFIT

/SUNNYHEALTHFITNESS

/SUNNYHEALTHANDFITNESS

SUNNY HEALTH & FITNESS

WWW.SUNNYHEALTHFITNESS.COM