redeye 2

Hemoglobin sensor

User Manual

Taiwan RedEye Biomedical Inc.

Preface

Thank you for buying redeye 2. In order to use this product properly, please read the user manual seriously before using.

Commitment：If you need more information when using this product, please contact us.

Parts replacement：Customers can only use filters that produced by RedEye. When there is any part broken, please ask our technical Service Engineer for help. If users don't use the parts that RedEye offer and cause any damage, RedEye won't be responsible for it.

Precaution :

This device complies with part 15 of the FCC Rules. Operation is subject to the following two conditions :

(1) This device may not cause harmful interference, and

(2) This device must accept any interference received, including interference that may cause undesired operation.

This equipment has been tested and found to comply with the limits for a Class B digital device, pursuant to Part 15 of the FCC Rules. These limits are designed to provide reasonable protection against harmful interference in a residential installation. This equipment generates, uses and can radiate radio frequency energy and, if not installed and used in accordance with the instructions, may cause harmful interference to radio communications.

However, there is no guarantee that interference will not occur in a particular installation. If this equipment does cause harmful interference to radio or television reception, which can be determined by turning the equipment off and on, the user is encouraged to try to correct the interference by one or more of the following measures:

- ◆ Reorient or relocate the receiving antenna.
- ◆ Increase the separation between the equipment and receiver.
- ◆ Connect the equipment into an outlet on a circuit different from that to which the receiver is needed.
- ◆ Consult the dealer or an experienced radio/TV technician for help.

Warning:

Changes or modifications to this unit not expressly approved by the party responsible for compliance could void the user authority to operate the equipment.

1. To comply with FCC RF exposure compliance requirements, a separation distance of at least 20 cm must be maintained between the antenna of this device and all persons.
2. This Transmitter must not be co-located or operating in conjunction with any other antenna or transmitter

- Product name：Redeye Hemoglobin Sensor
- Model name：redeye 2
- Model name of Wireless Charger: redeye-S
- Trade Name：RedEye
- MFD：As shown on the package
- Effective period：5 years
- Manufacturer: Taiwan RedEye Biomedical Inc.

The copyright of this user manual belongs to Taiwan RedEye Biomedical Inc.

The pictures in this user manual are only for instruction, please give the priority to the real products. The authorities of explanation and revising belongs to Taiwan RedEye Biomedical Inc.

Date of editing: March, 5. 2020

If you have any problem about this user manual or using step, please contact us. Our phone number is 03-5750701

10F-7, No.118, Ciyun Rd., Hsinchu City 300, Taiwan

About redeye 2：Redeye 2 can detect the existence of hemoglobin in toilet water. People don't need to collect specimen of excrement, but it can't become the basis to judge if you get sick or not.

Attributes of redeye 2：

- redeye 2 is a kind of optical apparatus that can be used to monitor your health at home. It is used to offer people warning that there might have some problem of their bodies to achieve the goal that the earlier you find out the diseases, the earlier you can get treatment.
- According to the guideline of International customs product classification, redeye's HS CODE is 902750, which is about a apparatus that use optical radiation like UV rays, visible lights, and infrared, to operate.

Principle about redeye 2：

Redeye 2 determines whether urine or excrements contain hemoglobin through sensing the heme spectrum signal in toilet water by following the principle of spectrophotometer.

Compositions of redeye 2： This product is composed of a Hemoglobin tester, Wireless Charger, and software.

- Hemoglobin tester：It contains a DC 3.7V，950mAh lithium battery, and its case is made of plastic.
  Weight (with lithium battery): 200g; Wide: 30mm, Height: 55mm, Length:270mm
- Wireless Charger： Its case is made of plastic.
  Weight: 500g; Wide: 110mm, Height: 210mm, Length:83mm
- Filter：
  Filter is a kind of consumable product that only can be used once. It is made of biodegradable virgin pulp.
  40 pieces/pack, Weight:8g/pack, Length:50mm

Condition of charging：

Hemoglobin tester：Lithium Battery DC 3.7V，1500mAh；

Wireless Charger：Current input over 5V, 1A or power adaptor with input over AC 220V，50Hz and output over 5V, 1A. The power adaptor should be prepared by yourself.

The function of wireless charger

1. Every time you put hemoglobin tester back to the wireless charger, the product will automatically turn on the fan and ultraviolet light to dry and sterilize the drill for 30 min. If you don't use this product for a long time, the wireless charger will automatically turn on the fan and ultraviolet light to dry and sterilize the drill every 12 hours. Using wise way to keep product dry and sterilize the drill can improve the feeling of using this product and feel more sanitary.

2. These products are all equipped with micro USB jacks, they can be used to directly charge the hemoglobin testers.

Specification：

Product name	Hemoglobin sensor
Model name	redeye 2
Icons	positive 、negative 、invalid
Way of sensing	Spectrophotometry
Level of sensitivity	25 ± 5 ppm
Power supply	Lithium battery (1500mAh)
Way of charging	Wireless charging Qi 120kHz~225kHz
Wireless charger	Wireless charging、sterilizing with ultraviolet light、drying with fan
Fan current input	5V, 80mA
Display interface	0.96" color TFTLCD
WIFI	802.11 b/g/n 2.4GHz
Waterproof performance	IPX7 (hemoglobin tester)、IPX5 (wireless charger)

Environment of using	＋ 10 ～＋ 40 ℃、30～85％ RH
Environment of storing	－20 ～＋ 60 ℃、10～95％ RH
Weight	Hemoglobin sensor 200 g、wireless charge 500 g
Size of the product	Wide: 30mm, Height: 55mm, Length:270mm(hemoglobin tester) Wide: 110mm, Height: 83mm, Length:270mm(wireless charger)
consumables	Filters for redeye 2

Reminders:

- Do not test during menstrual bleeding, hemorrhoids bleeding, or diarrhea.
- Please store the unused filters at room temperature and avoid moisture.

Appearance of the product：

Installing steps：

1. Fix the wireless charger on the base.

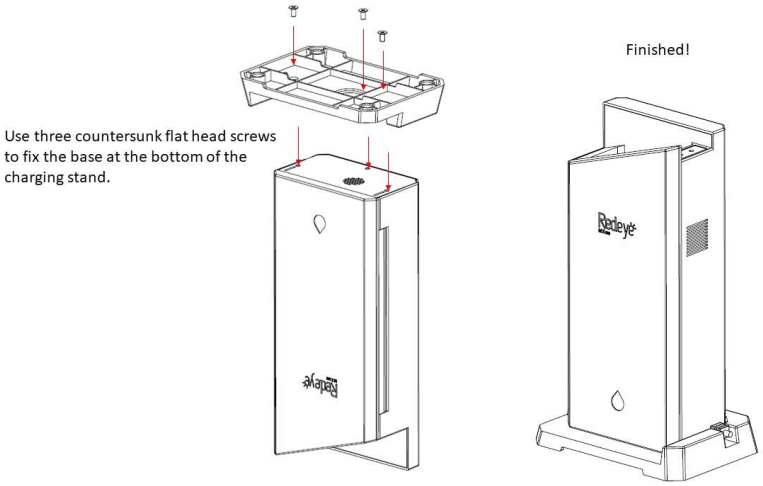

2.

Mount the wireless charger on the wall.

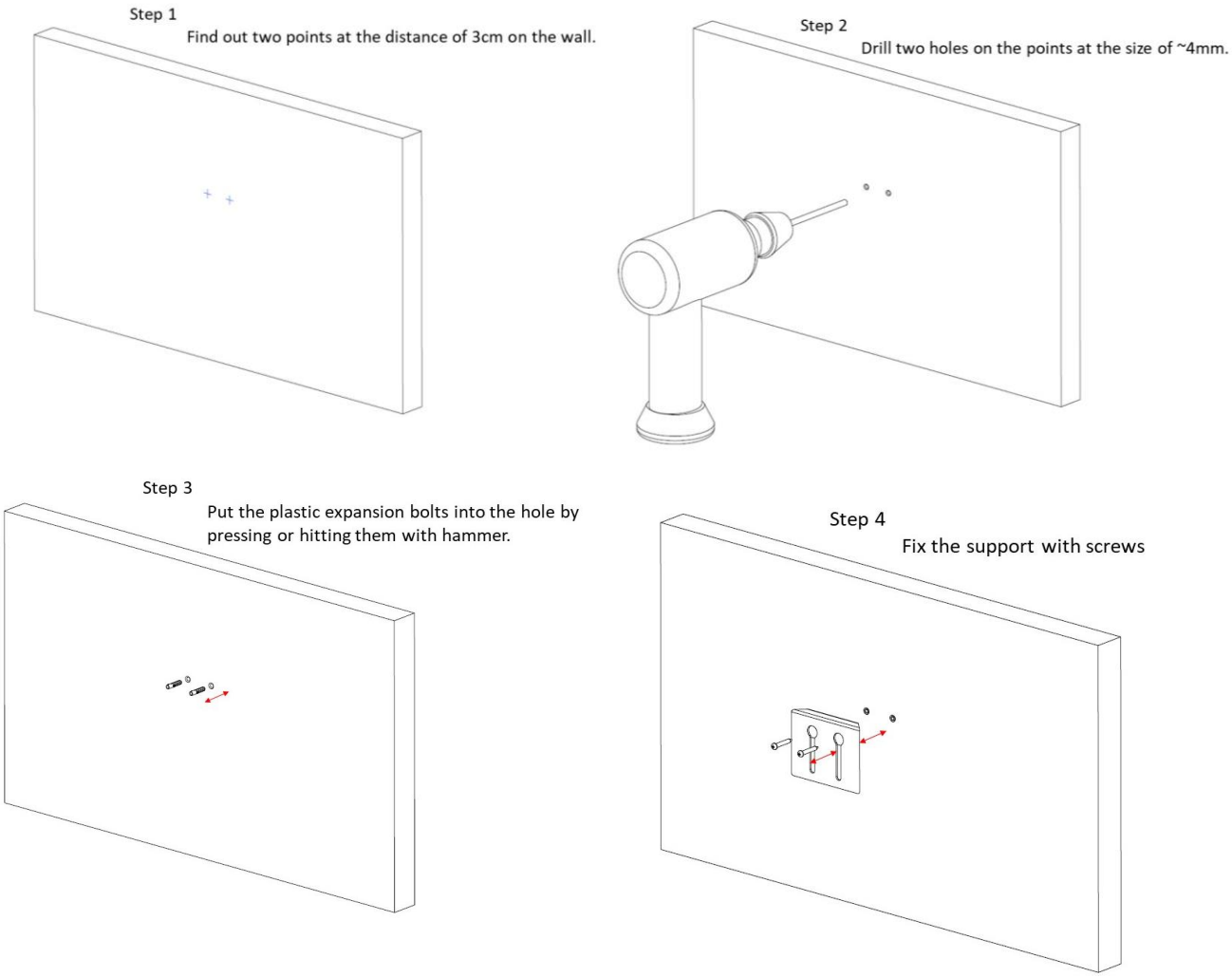

Step 5

Fasten the thumb screws on the back of the charging stand.

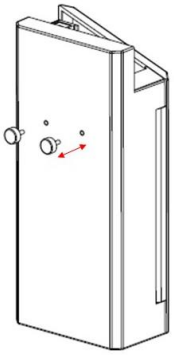

Step 6

Assemble the two parts and pull the charging stand down slightlyto fix the device.

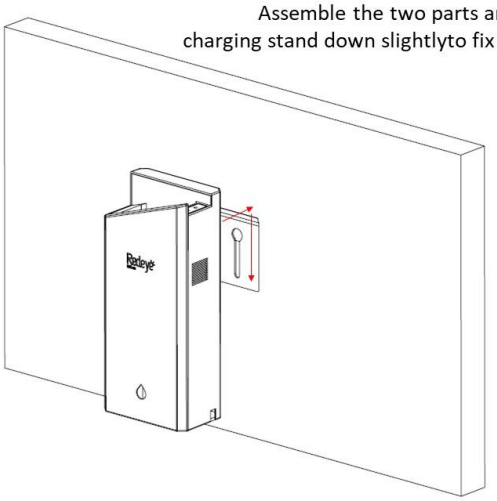

Step 7

Finished!

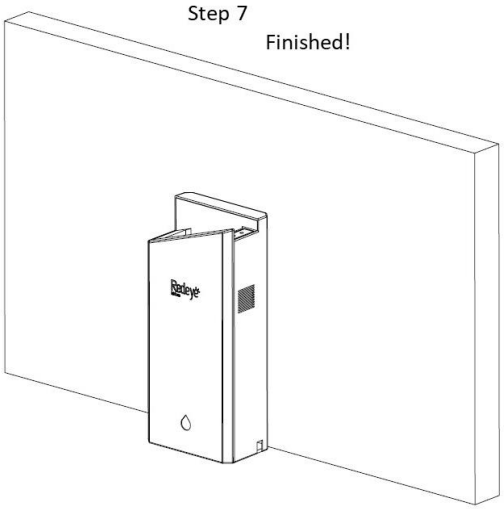

Using steps：

1. Open the outer case.
2. Install the wireless charger: After taking out the wireless charger, put it on a flat, and insert the USB into a 5V DC power output plug. You can use general charger like mobile phone charger.
3. After taking out the hemoglobin sensor, put it on the wireless charger.
   Before the first time you use it, it needs to be charged for 8 hours in advance.
   When charging, the light is orange; when it is fully charged, the light is green.
   Only when the hemoglobin tester is put on the right position of the wireless

charger, the function of charging, drying, and sterilize will work.

4. Use toilet brush to clean the toilet and flush dirty water away. If it is necessary, this step can be repeated again.
5. After peeing or defecating, the excrement should be stood still for 5 min.
6. Take out the hemoglobin tester from the wireless charger.
7. Take out a filter from filter box.
8. Put on a filter to cover the drill and press the spring clip to fix the filter.
9. In order to turn on the apparatus, please press the power button for 2-3 se

until a pink R shows on the screen.

10. After the icon of battery pop up on the screen , you can start to test.
11. Put the leading edge of the filter within 5 cm into the toilet water and press the test button, the icon of testing will show up. About 10 seconds later, the outcome will be shown on the screen.
12. According to the outcome, if the red solid icon shows up, it means positive reaction. On the contrary, if the green hollow icon shows up, it means negative reaction.
13. If the exclamation mark shows up on the screen, it means the test outcome is invalid. The reason is usually attributed to the leading edge isn't put into the toilet water in a proper position, bubble is generated in the optical measurement area, or the toilet water is too dirty that the filter can't filter.
14. Hold the pole on the front of the apparatus and push forward, then you can detach the filter into the toilet or trash can. Filter is a kind of consumable product that is made of biodegradable virgin pulp. It can be used to separate the fecal particles.
15. After detaching the filter, put the drill under the flowing tap water to rinse for 10 seconds.
16. Dry the front part of the drill with tissues, including the leading edge of optical measurement area. Please make sure that not much water was left on it.
17. Put the hemoglobin tester back to the wireless charger, the wireless charger will

automatically dry it with fan, sterilize with ultraviolet light, and charge wirelessly. It will suspend working 30 minutes later.

18. Press the power button for 3 seconds to turn off the hemoglobin tester.
19. If it is necessary, you can open the door of the wireless charger to clean the inner surface. When sterilizing with ultraviolet light, people can't look directly at the ultraviolet light consecutively.
20. **Smart maintenance:** After putting the hemoglobin tester back to the wireless charger and finish the first time of charging and cleaning, the product will automatically turn on the fan and ultraviolet light to dry and sterilize the drill every 12 hours until next time it is taken out to use again. The purpose is to keep the drill dry and prevent the growth of bacteria and mold.

redeye 2's icon	meaning	position	explanation
	Power button	Hemoglobin tester	Press the power button for 2-3 seconds to turn on the apparatus
	Test button	Hemoglobin tester	Press one time to start testing
	testing	screen	About 10 seconds later, the outcome will be shown on the screen.
	Positive reaction	screen	Refers to the fecal solution is positive for heme
	Negative reaction	screen	Refers to the fecal solution is negative for heme
	Exclamation mark	screen	The outcome is invalid
	Low power	screen	The battery needs to be charged

	Battery level	screen	Shows the level of battery
	Charging indicator light	Wireless charger	Orange light：charging Green light：charging completed
/UV	Drying/Sterilizing	Wireless charger	It is drying and sterilizing the drill when the blue light in on.

Warning:

- The test can’ t become the basis to judge if you get sick or not.
- This test can’ t replace some examination like colonoscopy, endoscopy, gastroscopy and x-ray analysis.
- If you are doubtful about the outcome of the test, you should go to a doctor for help with initiative.

Features of the product:

- For environmental friendly reason, we don’t offer plug. You can use general mobile plug or charge by USB

WIFI function :

Please download the RedEye APP from the APP market.

And follow the instruction of the APP.

Reminder of safety：When installing this product, please follow the information of electromagnetic compatibility and avoid being interrupted by other magnetic field which is caused by other devices.

- This product is for monitoring your health at home. It is not classified as medical equipment. The test results can't replace the prescription that doctor gives, nor can they be used to diagnose, treat, or prevent any disease.

Manufacturer: Taiwan RedEye Biomedical Inc.
Address：10F-7, No.118, Ciyun Rd., Hsinchu City 300, Taiwan
service@redeyebmi.com

redeye 1

Hemoglobin sensor

User Manual

Taiwan RedEye Biomedical Inc.

Preface

Thank you for buying redeye 1. In order to use this product properly, please read the user manual seriously before using.

Commitment：If you need more information when using this product, please contact us.

Parts replacement：Customers can only use filters that produced by RedEye. When there is any part broken, please ask our technical Service Engineer for help. If users don't use the parts that RedEye offer and cause any damage, RedEye won't be responsible for it.

Precaution :

This device complies with part 15 of the FCC Rules. Operation is subject to the following two conditions :

(1) This device may not cause harmful interference, and

(2) This device must accept any interference received, including interference that may cause undesired operation.

This equipment has been tested and found to comply with the limits for a Class B digital device, pursuant to Part 15 of the FCC Rules. These limits are designed to provide reasonable protection against harmful interference in a residential installation. This equipment generates, uses and can radiate radio frequency energy and, if not installed and used in accordance with the instructions, may cause harmful interference to radio communications.

However, there is no guarantee that interference will not occur in a particular installation. If this equipment does cause harmful interference to radio or television reception, which can be determined by turning the equipment off and on, the user is encouraged to try to correct the interference by one or more of the following measures:

- ◆ Reorient or relocate the receiving antenna.
- ◆ Increase the separation between the equipment and receiver.
- ◆ Connect the equipment into an outlet on a circuit different from that to which the receiver is needed.
- ◆ Consult the dealer or an experienced radio/TV technician for help.

Warning:

Changes or modifications to this unit not expressly approved by the party responsible for compliance could void the user authority to operate the equipment.

1. To comply with FCC RF exposure compliance requirements, a separation distance of at least 20 cm must be maintained between the antenna of this device and all persons.
2. This Transmitter must not be co-located or operating in conjunction with any other antenna or transmitter

- Product name：Redeye Hemoglobin Sensor
- Model name：redeye 1
- Model name of Wireless Charger: redeye-S
- Trade Name：RedEye
- MFD：As shown on the package
- Effective period：5 years
- Manufacturer: Taiwan RedEye Biomedical Inc.

The copyright of this user manual belongs to Taiwan RedEye Biomedical Inc.

The pictures in this user manual are only for instruction, please give the priority to the real products. The authorities of explanation and revising belongs to Taiwan RedEye Biomedical Inc.

Date of editing: March, 5. 2020

If you have any problem about this user manual or using step, please contact us. Our phone number is 03-5750701

10F-7, No.118, Ciyun Rd., Hsinchu City 300, Taiwan

About redeye 1：Redeye 1 can detect the existence of hemoglobin in toilet water. People don't need to collect specimen of excrement, but it can't become the basis to judge if you get sick or not.

Attributes of redeye 1：

- Redeye 1 is a kind of optical apparatus that can be used to monitor your health at home. It is used to offer people warning that there might have some problem of their bodies to achieve the goal that the earlier you find out the diseases, the earlier you can get treatment.
- According to the guideline of International customs product classification, redeye's HS CODE is 902750, which is about a apparatus that use optical radiation like UV rays, visible lights, and infrared, to operate.

Principle about redeye 1：

Redeye 1 determines whether urine or excrements contain hemoglobin through sensing the heme spectrum signal in toilet water by following the principle of spectrophotometer.

Compositions of redeye 1： This product is composed of a Hemoglobin tester, Wireless Charger, and software.

- Hemoglobin tester：It contains a DC 3.7V，950mAh lithium battery, and its case is made of plastic.
  Weight (with lithium battery): 200g; Wide: 30mm, Height: 55mm, Length:270mm
- Wireless Charger： Its case is made of plastic.
  Weight: 500g; Wide: 110mm, Height: 210mm, Length:83mm
- Filter：
  Filter is a kind of consumable product that only can be used once. It is made of biodegradable virgin pulp.
  40 pieces/pack, Weight:8g/pack, Length:50mm

Condition of charging：

Hemoglobin tester：Lithium Battery DC 3.7V，1500mAh；

Wireless Charger：Current input over 5V, 1A or power adaptor with input over AC 220V，50Hz and output over 5V, 1A. The power adaptor should be

prepared by yourself.

The function of wireless charger

1. Every time you put hemoglobin tester back to the wireless charger, the product will automatically turn on the fan and ultraviolet light to dry and sterilize the drill for 30 min. If you don't use this product for a long time, the wireless charger will automatically turn on the fan and ultraviolet light to dry and sterilize the drill every 12 hours. Using wise way to keep product dry and sterilize the drill can improve the feeling of using this product and feel more sanitary.

2. These products are all equipped with micro USB jacks, they can be used to directly charge the hemoglobin testers.

Specification：

Product name	Hemoglobin sensor
Model name	redeye 1
Icons	positive 、negative 、invalid
Way of sensing	Spectrophotometry
Level of sensitivity	25 ± 5 ppm
Power supply	Lithium battery (1500mAh)
Way of charging	Wireless charging
Wireless charger	Wireless charging、sterilizing with ultraviolet light、drying with fan
Fan current input	5V, 80mA
Display interface	0.96" color TFTLCD
Waterproof performance	IPX7 (hemoglobin tester)、IPX5 (wireless charger)

Environment of using	＋ 10 ～＋ 40 ℃、30～85％ RH
Environment of storing	－20 ～＋ 60 ℃、10～95％ RH
Weight	Hemoglobin sensor 200 g、wireless charge 500 g
Size of the product	Wide: 30mm, Height: 55mm, Length:270mm(hemoglobin tester) Wide: 110mm, Height: 83mm, Length:270mm(wireless charger)
consumables	Filters for redeye 1

Reminders:

- Do not test during menstrual bleeding, hemorrhoids bleeding, or diarrhea.
- Please store the unused filters at room temperature and avoid moisture.

Appearance of the product：

Installing steps：

1. Fix the wireless charger on the base.

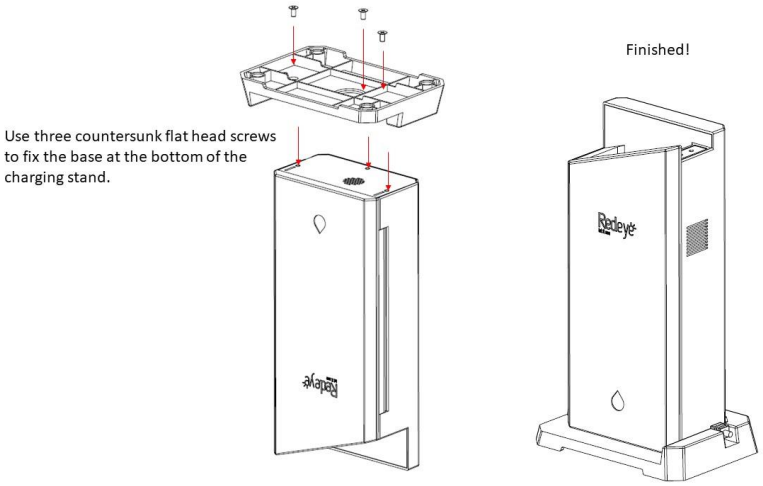

2.

Mount the wireless charger on the wall.

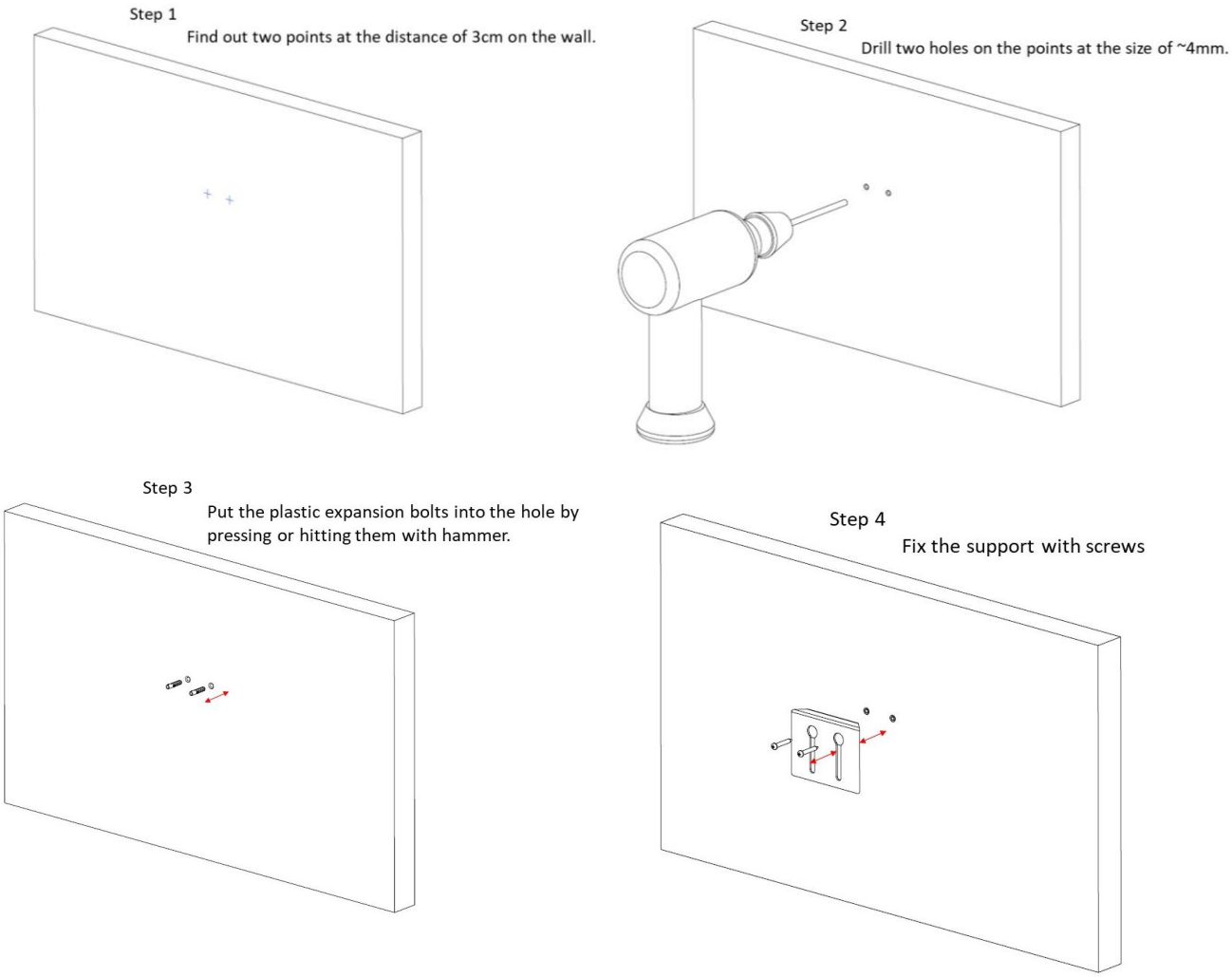

Step 5

Fasten the thumb screws on the back of the charging stand.

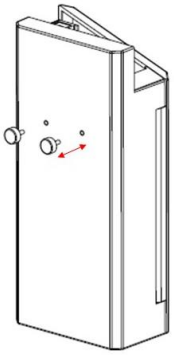

Step 6

Assemble the two parts and pull the charging stand down slightlyto fix the device.

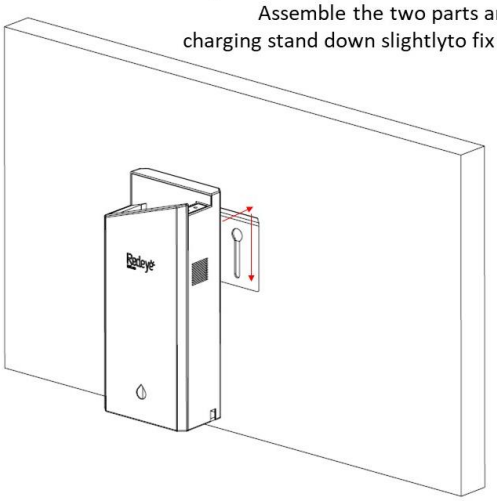

Step 7

Finished!

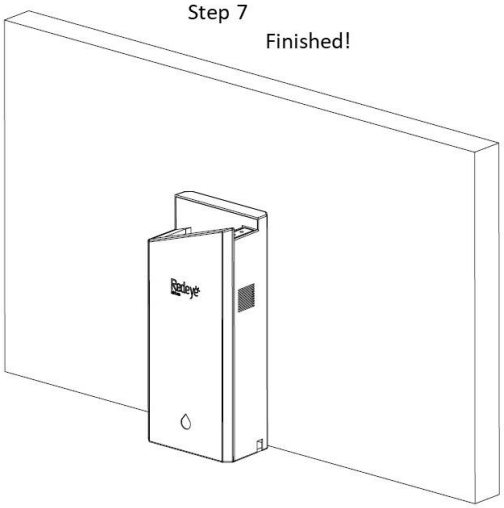

Using steps：

1. Open the outer case.
2. Install the wireless charger: After taking out the wireless charger, put it on a flat, and insert the USB into a 5V DC power output plug. You can use general charger like mobile phone charger.
3. After taking out the hemoglobin sensor, put it on the wireless charger.
   Before the first time you use it, it needs to be charged for 8 hours in advance.
   When charging, the light is orange; when it is fully charged, the light is green.
   Only when the hemoglobin tester is put on the right position of the wireless

charger, the function of charging, drying, and sterilize will work.

4. Use toilet brush to clean the toilet and flush dirty water away. If it is necessary, this step can be repeated again.
5. After peeing or defecating, the excrement should be stood still for 5 min.
6. Take out the hemoglobin tester from the wireless charger.
7. Take out a filter from filter box.
8. Put on a filter to cover the drill and press the spring clip to fix the filter.
9. In order to turn on the apparatus, please press the power button for 2-3 se

until a pink R shows on the screen.

10. After the icon of battery pop up on the screen , you can start to test.
11. Put the leading edge of the filter within 5 cm into the toilet water and press the test button, the icon of testing will show up. About 10 seconds later, the outcome will be shown on the screen.
12. According to the outcome, if the red solid icon shows up, it means positive reaction. On the contrary, if the green hollow icon shows up, it means negative reaction.
13. If the exclamation mark shows up on the screen, it means the test outcome is invalid. The reason is usually attributed to the leading edge isn't put into the toilet water in a proper position, bubble is generated in the optical measurement area, or the toilet water is too dirty that the filter can't filter.
14. Hold the pole on the front of the apparatus and push forward, then you can detach the filter into the toilet or trash can. Filter is a kind of consumable product that is made of biodegradable virgin pulp. It can be used to separate the fecal particles.
15. After detaching the filter, put the drill under the flowing tap water to rinse for 10 seconds.
16. Dry the front part of the drill with tissues, including the leading edge of optical measurement area. Please make sure that not much water was left on it.
17. Put the hemoglobin tester back to the wireless charger, the wireless charger will

automatically dry it with fan, sterilize with ultraviolet light, and charge wirelessly. It will suspend working 30 minutes later.

18. Press the power button for 3 seconds to turn off the hemoglobin tester.
19. If it is necessary, you can open the door of the wireless charger to clean the inner surface. When sterilizing with ultraviolet light, people can't look directly at the ultraviolet light consecutively.
20. **Smart maintenance:** After putting the hemoglobin tester back to the wireless charger and finish the first time of charging and cleaning, the product will automatically turn on the fan and ultraviolet light to dry and sterilize the drill every 12 hours until next time it is taken out to use again. The purpose is to keep the drill dry and prevent the growth of bacteria and mold.

redeye 1's icon	meaning	position	explanation
	Power button	Hemoglobin tester	Press the power button for 2-3 seconds to turn on the apparatus
	Test button	Hemoglobin tester	Press one time to start testing
	testing	screen	About 10 seconds later, the outcome will be shown on the screen.
	Positive reaction	screen	Refers to the fecal solution is positive for heme
	Negative reaction	screen	Refers to the fecal solution is negative for heme
	Exclamation mark	screen	The outcome is invalid

	Low power	screen	The battery needs to be charged
	Battery level	screen	Shows the level of battery
	Charging indicator light	Wireless charger	Orange light：charging Green light：charging completed
/UV	Drying/Sterilizing	Wireless charger	It is drying and sterilizing the drill when the blue light in on.

Warning:

- The test can’ t become the basis to judge if you get sick or not.
- This test can’ t replace some examination like colonoscopy, endoscopy, gastroscopy and x-ray analysis.
- If you are doubtful about the outcome of the test, you should go to a doctor for help with initiative.

Features of the product:

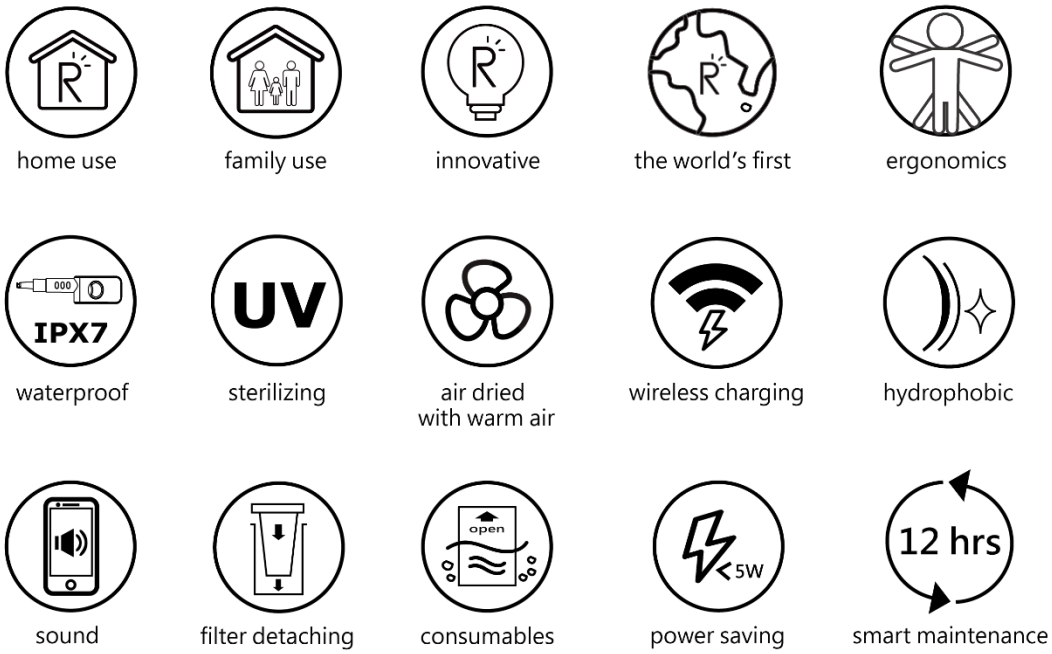

- For environmental friendly reason, we don’t offer plug. You can use general

mobile plug or charge by USB

Reminder of safety：When installing this product, please follow the information of electromagnetic compatibility and avoid being interrupted by other magnetic field which is caused by other devices.

- This product is for monitoring your health at home. It is not classified as medical equipment. The test results can't replace the prescription that doctor gives, nor can they be used to diagnose, treat, or prevent any disease.

Manufacturer: Taiwan RedEye Biomedical Inc.
Address：10F-7, No.118, Ciyun Rd., Hsinchu City 300, Taiwan
service@redeyebmi.com