Translation of the original Operating Instructions

Remote-controlled lifting device

LUDWIGHOOK

LUDWIGSYSTEM

Ludwig System GmbH & Co KG, Reichenhaller Straße 109, 83435 Bad Reichenhall, Germany
Tel.: +49 8651 7656730, info@ludwigsystem.com, www.ludwigsystem.com

Preface

We thank you for your decision to acquire remote-controlled slinging equipment from Ludwig System GmbH & Co KG.

We would ask you to read the following operating instructions and to observe the listed items in order to guarantee problem-free, and primarily safe, operation.

- You should use the load slinging equipment in accordance with the operating instructions.
- The load slinging equipment should be serviced and cleaned at regular intervals.

Copyright

The operating instructions are the intellectual property of Ludwig System GmbH & Co KG. It must not be copied, neither completely or partially as extracts, published or used in any other way for exploitation.

Modifications

We retain the right to make modifications in the course of design developments without having to correct these operating instruction at the same time.

Issue date: 6/10/20

1 Supply 1-1

1.1 Scope of supply for the LUDWIG HOOK System 1-1
1.1.1 Standard 1-1
1.1.2 Options 1-2

1.2 Identification plate 1-2
1.2.1 LUDWIG HOOK 1-2
1.2.2 Radio remote control 1-3

2 Safety 2-1

2.1 Symbols used 2-1
2.1.1 Signal Words 2-2
2.1.2 Safety Alert Symbol 2-2
2.1.3 Safety Symbols 2-2

2.2 Area of use/limits to use 2-3
2.2.1 Environmental conditions 2-3
2.2.2 Technical condition 2-3
2.2.3 Operation 2-4
2.2.4 Maximum number of load cycles 2-4
2.2.5 Modifications 2-4
2.2.6 Remote control 2-5

2.3 Intended use 2-5

2.4 Misuse 2-6
2.4.1 Passenger transport prohibited 2-6
2.4.2 Overload 2-7
2.4.2.1 LUDWIG HOOK 2-7
2.4.2.2 Breakage 2-7

2.5 Application areas 2-8
2.5.1 Direct tension 2-8
2.5.2 Indirect tension 2-8
2.5.3 Choke hitch with lifting strap 2-8

2.6 Three-stage safety concept 2-8
2.6.1 Load table 2-8
2.6.1.1 Load table - direct tension 2-8
2.6.1.2 Load table - indirect tension 2-9
2.6.2 Two-button actuation 2-9
2.6.3 Opening safety device 2-9
2.6.4 Power failure 2-9

2.7 Organizational measures 2-10
2.7.1 Operating Instructions 2-10
2.7.2 Regulations 2-10

2.8 Personnel selection and qualification 2-11

2.9 Instructions for normal operation 2-12
2.9.1 Take the safety measures 2-12

2.9.2 Carry out function checks 2-13
2.9.3 Barrier-free environment for radio remote control..... 2-13
2.9.4 Check radio frequency..... 2-14
2.9.5 Create visual contact 2-15
2.9.6 Maintain a safe distance 2-16
2.10 Notes concerning specific types of danger 2-16
2.10.1 Residual dangers..... 2-16
2.10.1.1 Hook 2-16
2.10.1.2 Locking pin..... 2-18
2.10.1.3 Danger of fire/damage caused by deep discharge 2-19
2.10.1.4 Hot surface 2-19

3 Product 3-1

3.1 General points 3-1
3.2 Main components 3-1
3.2.1 LUDWIG HOOK..... 3-1
3.2.2 Radio remote control 3-2

4 Charging process 4-1

4.1 Chargers 4-1
4.2 Charging process 4-1
4.2.1 Charging LUDWIG HOOK 4-2
4.2.1.1 Place Ludwig Hook on the charging tray 4-3
4.2.1.2 Insert the charger cable in the charging tray 4-3
4.2.1.3 Insert the charger cable in the mains power socket 4-4
4.2.2 Charging the radio remote control 4-5
4.2.2.1 Removing the antenna..... 4-5
4.2.2.2 Inserting the charger cable 4-5
4.2.2.3 Inserting the charger into the mains socket 4-6
4.2.2.4 Fitting the antenna 4-6

5 Operation 5-1

5.1 Types of Loading/Max. Weights 5-1
5.1.1 Single-leg loading (90°) 5-1
5.1.2 Two-leg loading 5-2
5.1.2.1 Two-leg loading (75-90°) 5-2
5.1.2.2 Two-leg loading (45-75°) 5-3
5.1.2.3 Two-leg loading (30-45°) 5-3
5.2 Types of Loading/Max. Weights (Lifting Strap) 5-4
5.2.1 Single-leg loading 5-5
5.2.2 Two-leg loading 5-5
5.2.2.1 Two-leg loading (75-90°) 5-5
5.2.2.2 Two-leg loading (45-75°) 5-6

5.2.2.3 Two-leg loading (30-45°) 5-6
5.3 Permissible loading on the hook 5-7
5.4 Types of slinging equipment 5-9
5.4.1 Direct tension 5-9
5.4.2 Indirect tension 5-10
5.4.3 Lifting strap 5-11
5.4.3.1 Observe the threading direction 5-11
5.5 Before starting work 5-13
5.5.1 Check radio remote control 5-13
5.5.1.1 Carry out tests 5-13
5.5.1.2 Rubber protection sleeve (option) 5-13
5.5.2 Preparing the LUDWIG HOOK 5-14
5.5.2.1 Ludwig Protector (option) 5-14
5.5.2.2 Fitting to the crane hook 5-16
5.5.2.3 Carry out a function test over 55 lbs 5-17
5.6 Suspend the load 5-18
5.6.1 Close the hook manually 5-18
5.6.2 Check the locking pin 5-19
5.6.3 Suspending the load from the hook 5-20
5.7 Setting down the load 5-21
5.8 Releasing the load by radio. 5-22
5.8.1 Single actuation 5-22
5.8.2 Group actuation 5-23
5.9 After finishing work 5-24
5.9.1 Carry out suspended from the crane 5-24
5.9.2 In extreme weather 5-24
5.10 Storage 5-24

6 Disposal and recycling 6-1
6.1 Environmental Protection 6-1
6.2 Disposal 6-1
6.3 Battery recycling 6-1

7 Maintenance/problem treatment 7-1
7.1 Maintenance by the operator 7-1
7.1.1 Lubrication/cleaning 7-1
7.1.2 Function check and cleaning 7-2
7.2 Replacing the battery 7-3
7.3 Maintenance/checking 7-4
7.3.1 Frequent inspection 7-4
7.3.2 Annual maintenance 7-4
7.3.3 Test 7-4

7.4 Problem treatment 7-5

8 Technical data 8-1

8.1 General points 8-1
8.2 Loading 8-1
8.2.1 Single-leg loading 8-1
8.2.1.1 Directly 8-1
8.2.1.2 Directly (Lifting strap) 8-1
8.2.1.3 Indirectly 8-1
8.2.2 Two-leg loading (directly) 8-2
8.2.3 Two-leg loading (Lifting strap directly) 8-2
8.3 Electrical 8-2
8.4 Dimensions 8-3
8.5 Weight 8-3
8.6 Ambient conditions 8-3
8.6.1 Operation 8-3
8.6.2 Charging 8-3
8.6.3 Storage 8-4
8.6.4 Operation/storage charger 8-4

9 Warranty 9-1

10 Standards/regulations 10-1

1 Supply

1.1 Scope of supply for the LUDWIG HOOK System

1.1.1 Standard

Scope of supply		
Item	**Name**	**Number**
1	LUDWIG HOOK with integrated battery and shackle 3T (7)	1 off*
2	Radio remote control (with integrated battery)	1 off*
3	Antenna for remote control	1 off*
4	LUDWIG HOOK charging tray	1 off*
5	Mains plug for charging tray	1 off
6	Operating instructions (not illustrated)	1 off
*	Units depending on customer set-up.	

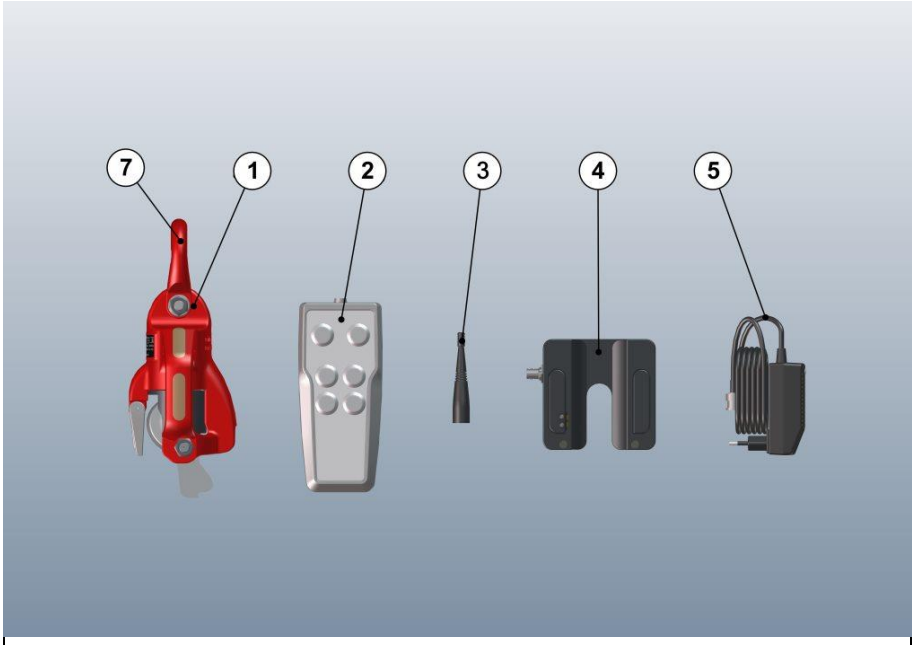

Image 1-1 Standard scope of supply

1.1.2 Options

Options		
Item	**Name**	**Number**
1	Rubber protection sleeve (see chapter 5 “Rubber protection sleeve (option)” on page 5 - 13)	off*
2	Lifting strap (see chapter 5 “Types of Loading/Max. Weights (Lifting Strap)” on page 5 - 4)	off*
3	Ludwig Protector (see chapter 5 “Ludwig Protector (option)” on page 5 - 14)	off*
*	Number as per customer request	

1.2 Identification plate

1.2.1 LUDWIG HOOK

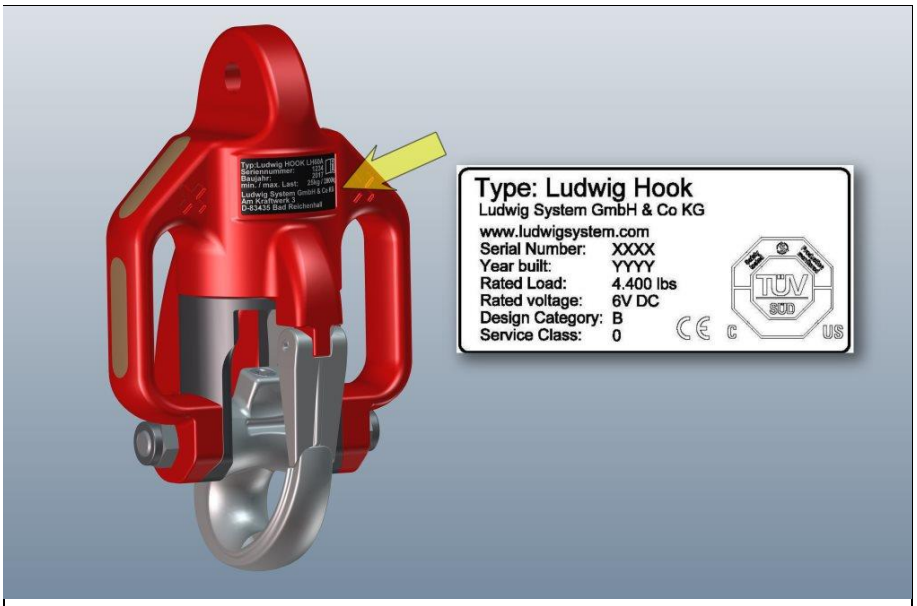

Image 1-2 Identification plate

1.2.2 Radio remote control

Image 1-3 Identification plate

2 Safety

⚠ WARNING	
	Use of Ludwig Hook XL can be hazardous. **Serious injuries to death.**
	Avoidance: • To reduce the risk of personal injury or death, ensure that all users of the Ludwig Hook XL carefully read and follow these Operating Instructions and are properly trained in use of this device.

2.1 Symbols used

The following names and characters are used for particularly important details in the operating instructions.

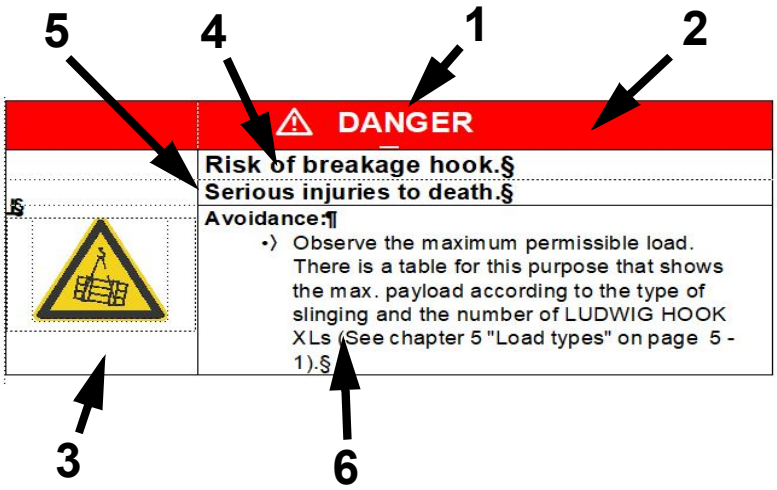

Fig.: 2-1 Safety label according to ANSI Z535.4

1: Signal words

2: Color = Severity of danger

3: Safety symbol

4: Hazard identification

5: Consequences of not avoiding the hazard

6: How to avoid the hazard

2.1.1 Signal Words

DANGER	DANGER indicates a hazardous situation which if not avoided, will result in death or serious injury.
WARNING	WARNING indicates a hazardous situation which, if not avoided, could result in death or serious injury.
CAUTION	CAUTION indicates a hazardous situation which, if not avoided, could result in minor or moderate injury.
NOTICE	NOTICE is used to address practices not related to physical injury.
SAFETY INSTRUCTION	Safety instructions (or equivalent) signs indicate specific safety-related instructions or procedures.

2.1.2 Safety Alert Symbol

	This is the safety alert symbol. It is used to alert you to potential physical injury hazards. Obey all safety messages that follow this symbol to avoid possible injury or death.

2.1.3 Safety Symbols

	Safety symbols communicate a similar message with the word message on the label or label. Safety text provide information on the danger or prevention of the danger.

2.2 Area of use/limits to use

The area of use of the LUDWIG HOOK‘s provides for use in combination with crane applications indoors and outdoors.

The LUDWIG HOOK has been constructed in accordance with state-of-the-art technology and the recognized safety-related regulations. Nevertheless, its use can generate dangers to the life and limb of the user or third parties and impairment of the LUDWIG HOOK‘s and other material assets.

2.2.1 Environmental conditions

⚠ WARNING	
	Use is not permitted in: • an explosive environment • a gaseous environment • a salty environment • an acidic environment • a basic environment • an underwater environment

2.2.2 Technical condition

⚠ WARNING	
	Use LUDWIG HOOK only... • in a technically perfect condition! • with consideration of the operating instructions!

2.2.3 Operation

⚠ DANGER	
	Carelessness. **Serious injuries to death.**
	Avoidance: • Work with intended use, with safety and danger awareness. • Conditions, in particular those that impair safety, must be eliminated immediately.

2.2.4 Maximum number of load cycles

⚠ DANGER	
	Hook breakage. **Serious injuries to death.**
	Avoidance: • After maximum number of load cycles (see chapter 8 “General points” on page 8 - 1) put the LUDWIG HOOK out of operation.

2.2.5 Modifications

⚠ DANGER	
	Dysfunction. **Serious injuries to death.**
	Avoidance: • Do not make any modifications or make any attachments on, or conversions to the LUDWIG HOOK without approval by the manufacturer!

2.2.6 Remote control

⚠ WARNING	
	Radio frequency. • Use remote control only as a handheld device. • Use of the remote is not permitted in a body-worn configuration.

2.3 Intended use

The LUDWIG HOOK is a hook from which loads up to 2T (4,400 lbs direct tension) can be suspended.

The LUDWIG HOOK can be unlocked using remote control, where the load is released without the need for anyone to approach the load, and to unhook it manually. Release is only possible when the load is put down. When the hook is under tension, the power supply to the opening mechanism is switched off and the hook is then in a safe condition.

NOTICE	
	Intended use also includes: • the observance of the operating instructions. • and the compliance with the inspection and maintenance instructions.

2.4 Misuse

2.4.1 Passenger transport prohibited

⚠ DANGER	
	Passenger transport **Serious injuries to death.**
	Avoidance: • Do not lift / transport people! The LUDWIG HOOK is not suitable for the lifting of persons!

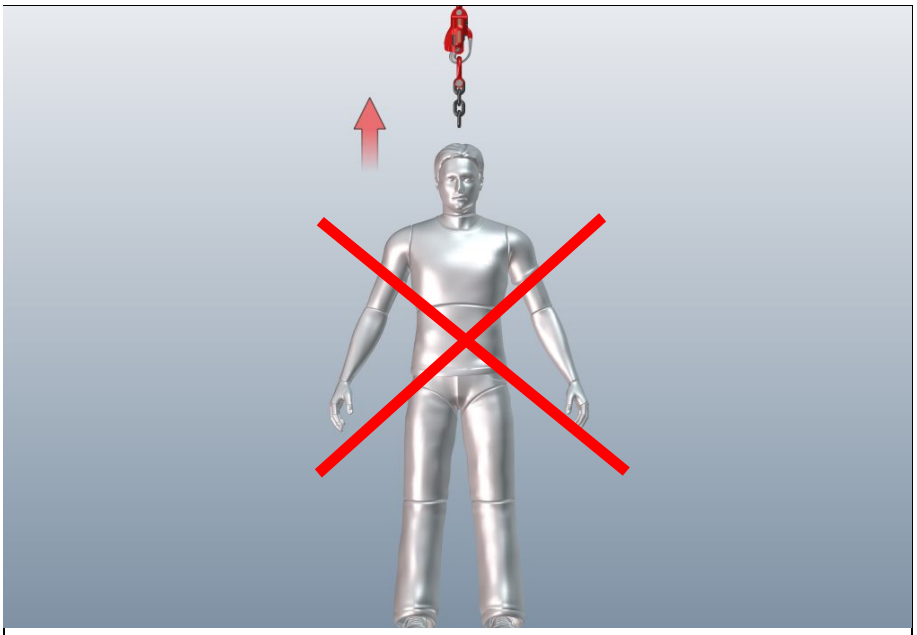

Image 2-2 Person transport NOT permitted

2.4.2 Overload

2.4.2.1 LUDWIG HOOK

The LUDWIG HOOK must only be used for the lifting of loads within its payload limit.

⚠ DANGER	
	Risk of hook breakage. **Serious injuries to death.**
	Avoidance: • Observe the maximum permissible load. There is a table for this purpose that shows the max. payload according to the type of slinging and the number of LUDWIG HOOKs (see chapter 5 “Load types” on page 5 - 1).

2.4.2.2 Breakage

⚠ DANGER	
	Risk of rigging hardware breakage. **Serious injuries to death.**
	Avoidance: • The rigging hardware (lifting straps, chains, shackles, etc.) used in connection with the LUDWIG HOOK must meet the requirements of the lifting process and must be approved for the particular application.

2.5 Application areas

Here we can differentiate between three significant areas of application:

- the slinging of a load in direct tension
  - (see chapter 5 “Direct tension” on page 5 - 9)
- the slinging of a load in indirect tension
  - (see chapter 5 “Indirect tension” on page 5 - 10)
- the slinging of a load with a lifting strap in choke hitch
  - see chapter 5 “Types of Loading/Max. Weights (Lifting Strap)” on page 5 - 4

2.5.1 Direct tension

The load is fixed directly onto the hook of the LUDWIG HOOK.

In this application, a shackle is attached to the hole in the cap on the LUDWIG HOOK. This can then, in turn, be attached to a load hood. The load itself is fixed directly onto the hook of the LUDWIG HOOK.

2.5.2 Indirect tension

A second strand (in the form of a chain, lifting strap) is attached to the load hook, alongside the LUDWIG HOOK.

The second strand is placed around the load or threaded through an eye on the load and then hung back into the LUDWIG HOOK.

2.5.3 Choke hitch with lifting strap

For lifting loads that have a choke hitch with a lifting strap. The lifting strap is threaded through the side eye-bolts on the LUDWIG HOOK´s.

2.6 Three-stage safety concept

2.6.1 Load table

2.6.1.1 Load table - direct tension

Three-stage safety concept “direct tension”				
	Residual load	2-Button radio	Opening safety device	Power failure
Suspension	0 lbs (0 kg)	X	-	-
When lifting / putting down				
	approx. 22 - 44 lbs (A)/(B) (10 - 20 kg)	X	-	-
Load travel	over 55.1 lbs (25 kg)	X	X	X

2.6.1.2 Load table - indirect tension

Three-stage safety concept “indirect tension”				
	Residual load	2-Button radio	Opening safety device	Power failure
Suspension	0 lbs (0 kg)	X	-	-
When lifting / putting down				
	approx. 44 - 88.2 lbs (A)/(B) (20-40 kg)	X	-	-
Load travel	over 110 lbs (50 kg)	X	X	X

2.6.2 Two-button actuation

The fact that two buttons always need to be pushed in the correct sequence means that, as far as possible, inadvertent actuation of the remote control is excluded (see chapter 5 “Releasing the load by radio” on page 5 - 22).

2.6.3 Opening safety device

Opening safety device with (residual) loads over 55 lbs by spring force. If, nevertheless, actuation of the release mechanism on the LUDWIG HOOK occurs, and the locking pin moves upwards, the special geometry of the LUDWIG HOOK ensures that the hook does not open far enough, with loads in excess of 55 lbs, to release the load. The load will remain hanging from the unlocked LUDWIG HOOK.

2.6.4 Power failure

Power failure with (residual) loads over approx. 55 lbs. Actuation of the remote control at this point in time has no effect. The load continues to hang safely from the locked LUDWIG HOOK (see chapter 5 “Carry out a function test over 55 lbs” on page 5 - 17).

2.7 Organizational measures

2.7.1 Operating Instructions

The original operating instructions are a constituent part of the LUDWIG HOOK. It must be retained and maintained during the entire service life.

The owner and/or user is responsible for the original operating instructions:

- being accessible for consultation at all times.
- is continuously availability at the site of use of the LUDWIG HOOK.
- will be forwarded to each subsequent owner.

2.7.2 Regulations

The generally-applicable legal and other binding regulations for accident prevention and for environmental protection must be observed and instructed alongside and supplementary to the operating instructions!

Obligations of this type can apply, for example, to the making available/ wearing of personal protection equipment.

Supplementing the operating instructions with instructions including supervision and reporting obligations for consideration of operational specialties, e.g. with regard to work organization, working sequences, personnel deployed.

⚠ WARNING	
	Information requirements.
	The personnel tasked with activities on the LUDWIG HOOK must be made familiar with the safety-relevant parts of the operating instructions and shall have understood the content. This applies particularly to the personnel only active on the LUDWIG HOOK occasionally.

The safety and danger awareness of the working personnel with consideration of the operating instructions must be checked at least occasionally!

2.8 Personnel selection and qualification

Any work on the LUDWIG HOOK must only be performed by reliable expert personnel. Use only trained or instructed personnel. The responsibilities of the personnel for operating and maintenance must be clearly laid down.

⚠ WARNING	
	Personnel qualification.
	Measure: • Make sure that only appointed personnel se-vice the LUDWIG HOOK.

2.9 Instructions for normal operation

⚠ CAUTION	
	Radio frequency.
	Avoidance: • During transmit operation, to limit RF exposure all persons are to be 1.2 in (3 cm) or more away from the transmit antenna.

2.9.1 Take the safety measures

⚠ CAUTION	
	Injury.
	Avoidance: • Wear protective gloves! • Wear a safety helmet! • Wear eye protection! • Wear safety shoes!

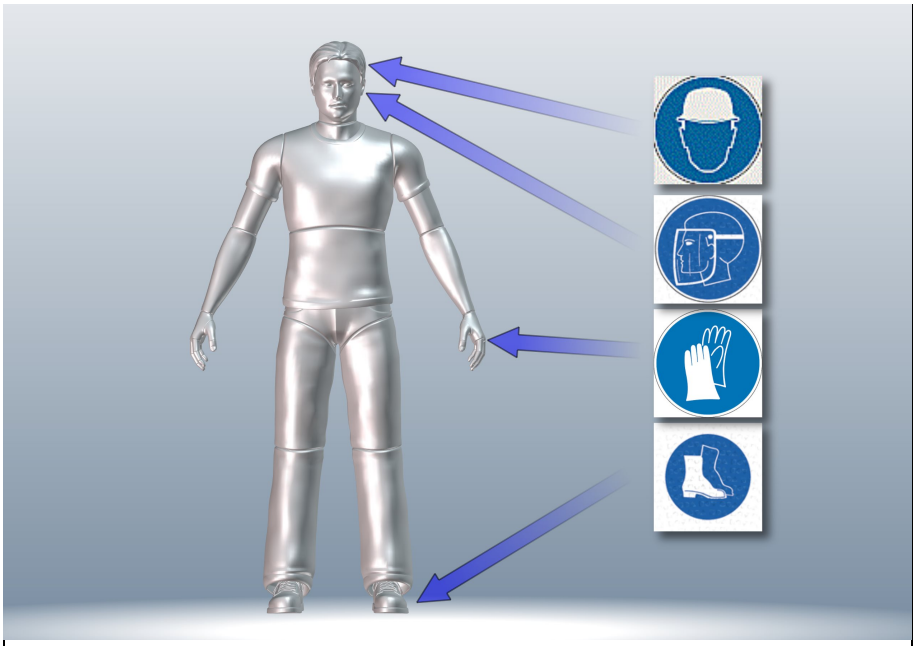

Image 2-3 Take the safety measures

Depending on the application, additional safety regulations may have to be complied with (see chapter 2 “Regulations” on page 2 - 10).

2.9.2 Carry out function checks

see chapter 5 “Before starting work” on page 5 - 13

2.9.3 Barrier-free environment for radio remote control

⚠ CAUTION	
	Establish radio contact.
	Radio contact between the remote control and the LUDWIG HOOK must be ensured at all times. **Measures:** • Ensure a fault-free and barrier-free environment.

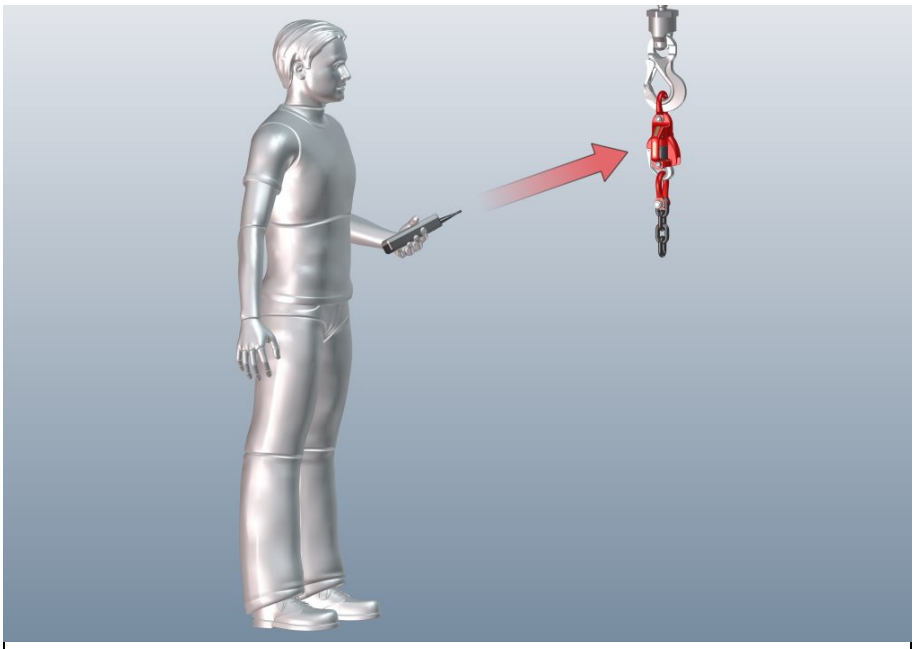

Image 2-4 Establish radio contact

2.9.4 Check radio frequency

NOTICE	
	Check radio frequency.
	Measures: • Perform test.

The user is obligated to perform a test before commissioning the LUDWIG HOOK from the closest distance to make sure that various different devices do not use the same radio frequency.

This applies particularly when using two LUDWIG HOOK systems close together.

⚠ CAUTION	
	Same radio frequency.
	Measures: • If mutual release takes place, the user is obligated to make contact with the supplier/ manufacturer immediately.

2.9.5 Create visual contact

⚠ WARNING	
	No clear view. **Serious injuries to death.**
	We need to point out that the operator must always have an unrestricted visual contact of the load to be released and the slinging equipment, including the LUDWIG HOOK. **Measures:** • Ensure a clear visual contact.

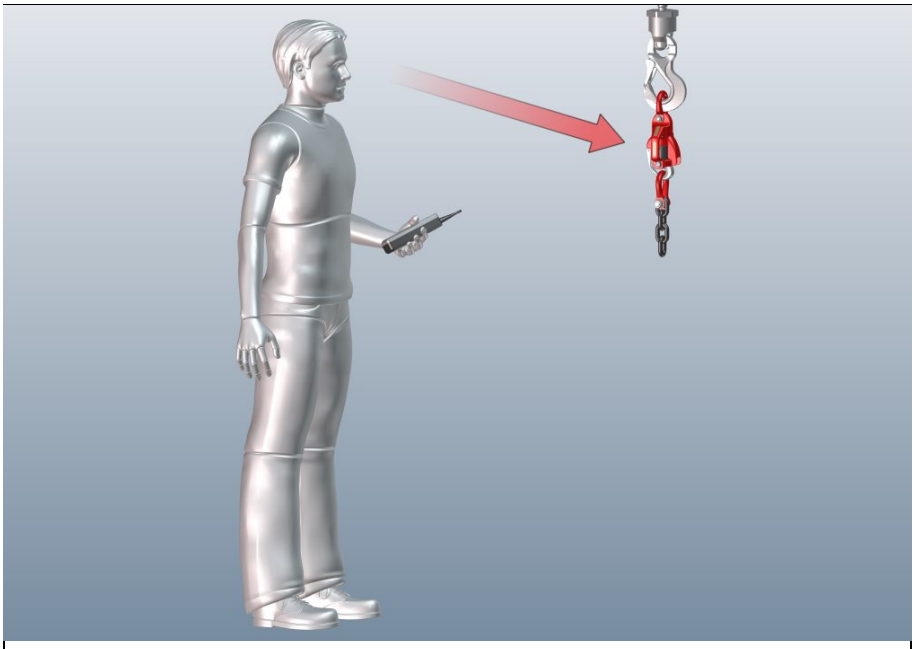

Image 2-5 Create a clear visual contact

2.9.6 Maintain a safe distance

⚠ DANGER	
	Suspended load. **Serious injuries to death.**
	Avoidance: • Use only suitable and technically perfect lifting equipment having adequate carrying capacity! • In addition, the required safety distance for the application must be observed. This, in turn, is derived from the crane being used and the load being moved.

2.10 Notes concerning specific types of danger

2.10.1 Residual dangers

2.10.1.1 Hook

⚠ CAUTION	
	Crushing. **Danger of finger injury.**
	When the release takes place via radio remote control, the hook opens quickly under spring force! **Avoidance:** • Adequate distance to be maintained from the hook being opened quickly by spring force! • Wear protective gloves!

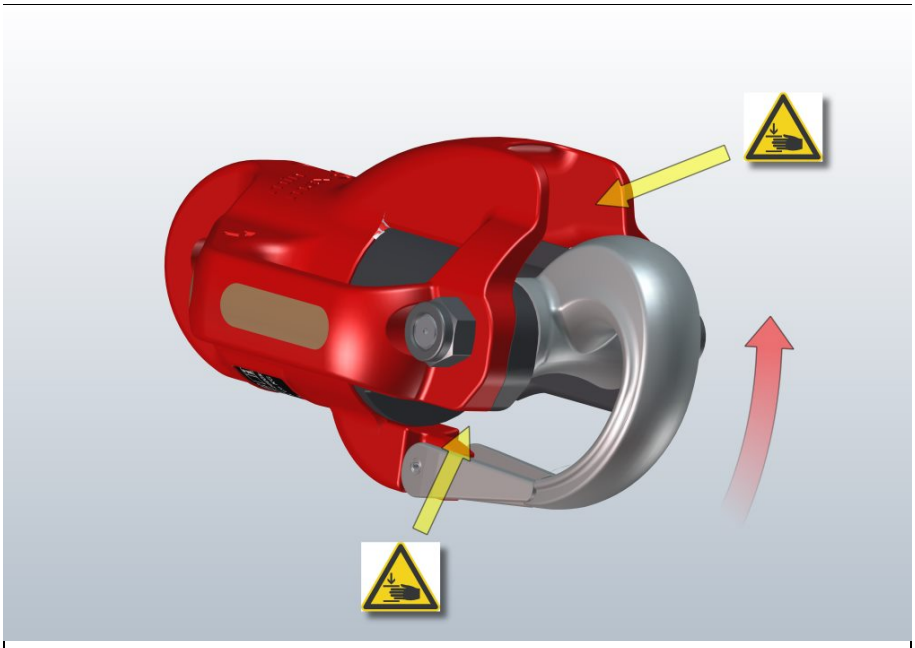

Image 2-6 Opening hook - finger injury!

2.10.1.2 Locking pin

⚠ CAUTION	
	Function impairment locking pin.
	Loads must not be suspended if the locking pin does not come out of the housing completely! **Avoidance:** • Clean the area around the locking pin in the event of dirt contamination! • Check the hook and locking pin for wear. Send the LUDWIG HOOK to the manufacturer if there are signs of wear!

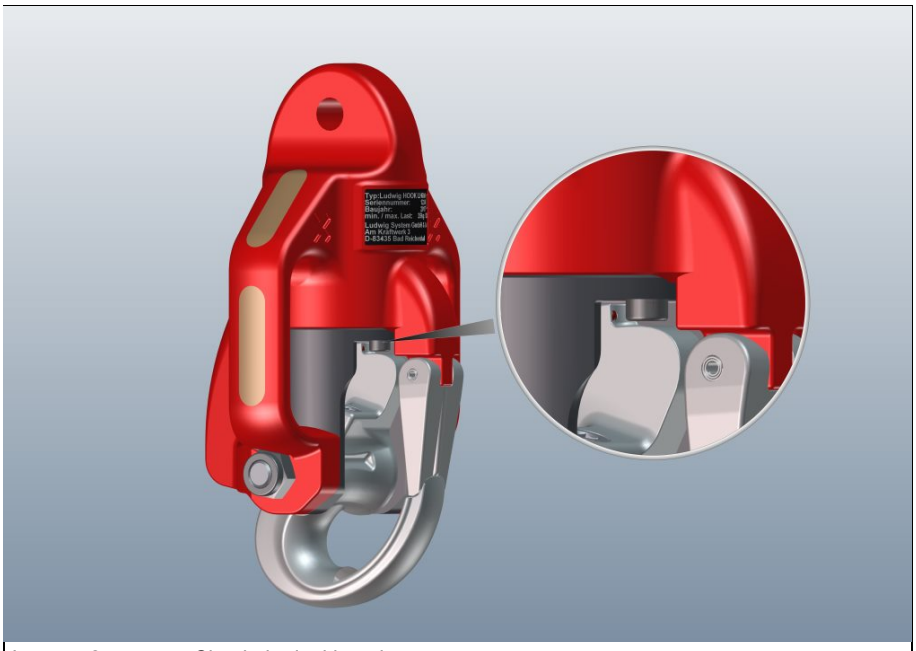

Image 2-7 Check the locking pin

2.10.1.3 Danger of fire/damage caused by deep discharge

NOTICE	
	Deep discharge NiMH battery.
	Battery damage caused by deep discharge of NiMH battery. • Ludwig Hook • Radio remote control NiMH batteries must not be charged after deep discharge! **Avoidance:** • NIMH batteries should not be exposed to heat or cold for extended periods. • Charge the batteries regularly.

2.10.1.4 Hot surface

⚠ CAUTION	
	Hot surface.
	Danger of hot metalic surface (handles). **Avoidance:** • Do not touch handles when placed in hot environment or use appropriate personal protective equipment.

3 Product

3.1 General points

The specific properties and design characteristics of the LUDWIG HOOK are the intellectual property of Ludwig System GmbH & Co KG.

3.2 Main components

3.2.1 LUDWIG HOOK

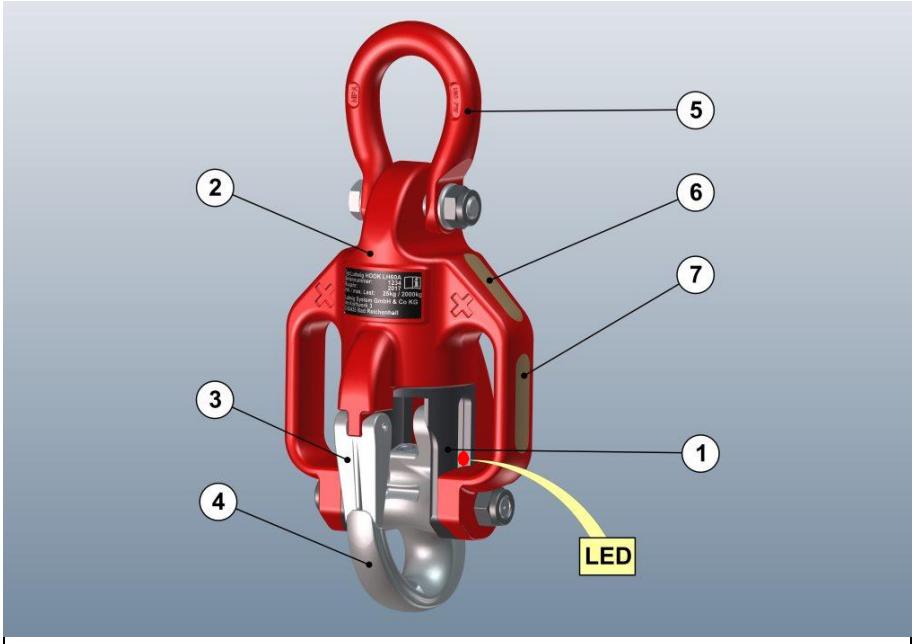

Image 3-1 LUDWIG HOOK

LUDWIG HOOK	
Item	**Name**
1	Housing (red LED)
2	Cap
3	Safety latch
4	Hook
5	“Unilock” shackle
6	Antenna window
7	Antenna window
8	Operating LED

3.2.2 Radio remote control

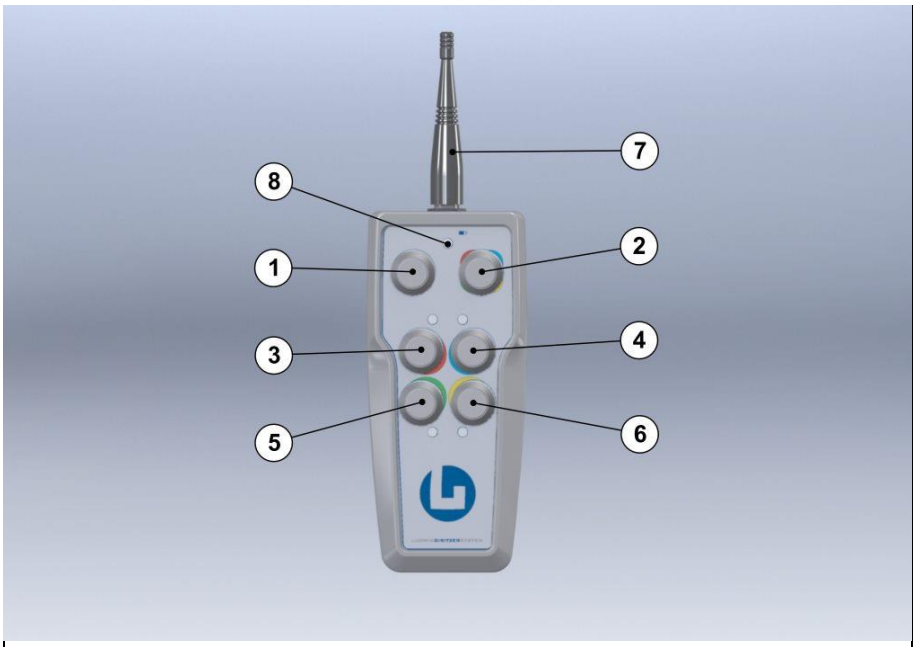

Image 3-2 Radio remote control front

Radio remote control	
Item	**Name**
1	Operating button
2	Group button (release button of all LUDWIG HOOK´s)
3	Release button LUDWIG HOOK red
4	Release button LUDWIG HOOK blue
5	Release button LUDWIG HOOK green
6	Release button LUDWIG HOOK yellow
7	Radio antenna
8	Operating LED

4 Charging process

NOTICE	
	Low charge level.
	Low charge level can be detected by a red flashing LED. **Measures:** • Charge LUDWIG HOOK as quickly as possible!

4.1 Chargers

Use the charger provided to charge the batteries (see chapter 1 “Scope of supply for the LUDWIG HOOK System” on page 1 - 1).

4.2 Charging process

NOTICE	
	First charge/after being in storage.
	The batteries must be charged before commissioning for the first time and after being in storage for an extended period (see chapter 2 “Danger of fire/damage caused by deep discharge” on page 2 - 17)!

4.2.1 Charging LUDWIG HOOK

The LUDWIG HOOK is charged in a charging tray.

NOTICE	
	Charge LUDWIG HOOK.
	Charge the battery of the LUDWIG HOOK only in opened (unlocked) condition!

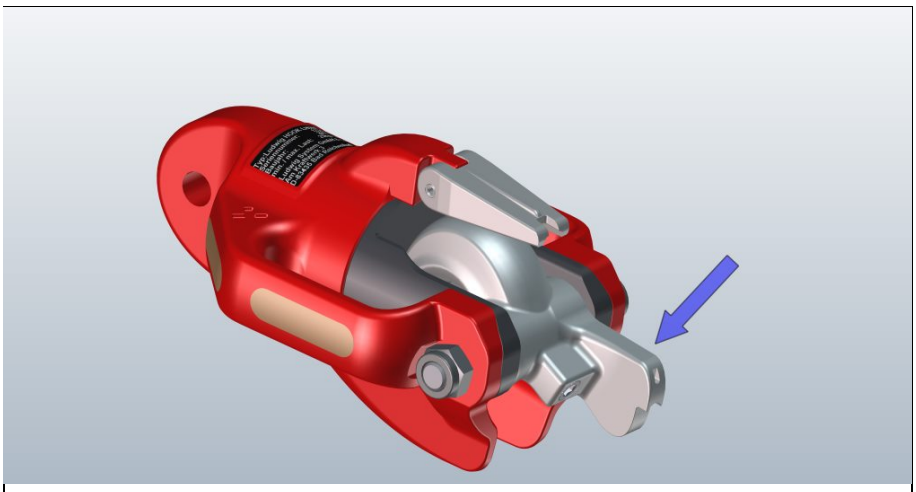

Image 4-1 Opened condition of the hook

4.2.1.1 Place Ludwig Hook on the charging tray

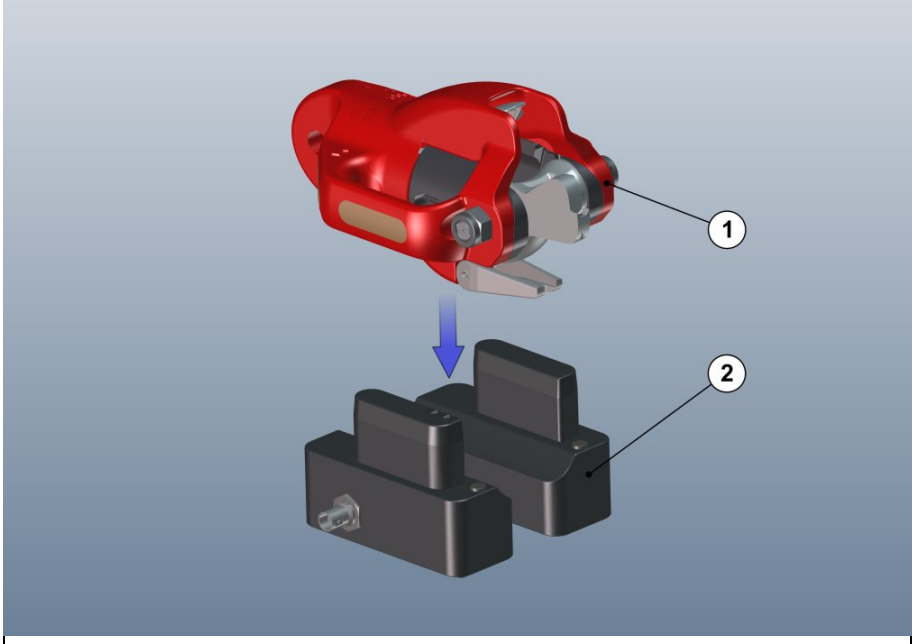

Image 4-2 Charging tray

- Place Ludwig Hook (1) on the charging tray (2) (identification plate downwards).

4.2.1.2 Insert the charger cable in the charging tray

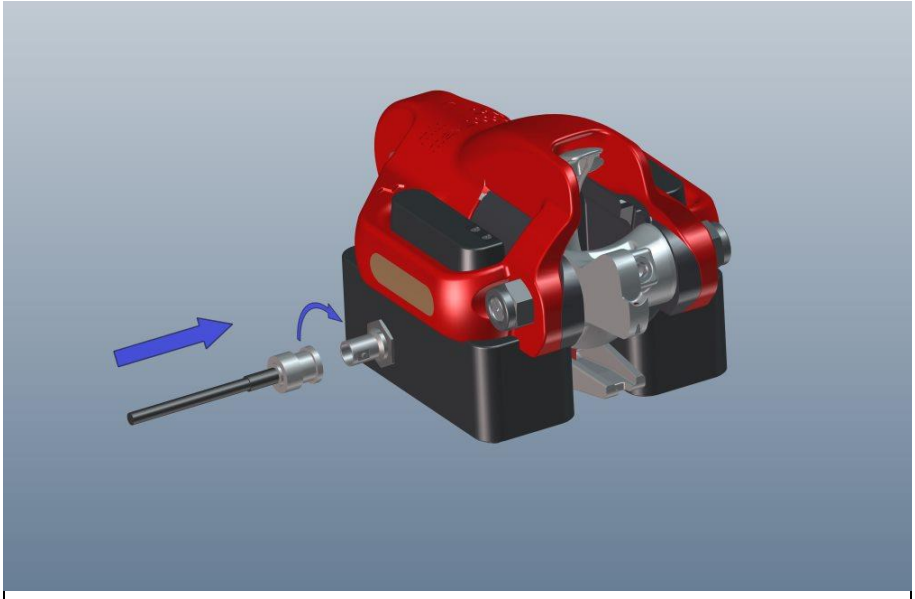

Image 4-3 Inserting the charger cable

4.2.1.3 Insert the charger cable in the mains power socket

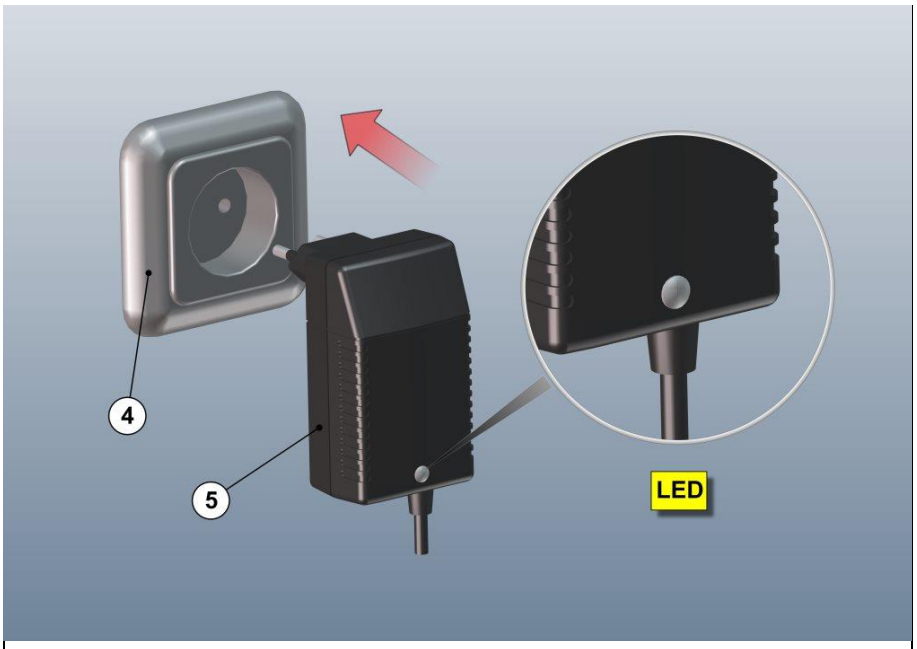

Image 4-4 Inserting the mains plug

- Inserting mains plug (5) into 220 V plug socket

LED	
Color	**Explanation**
Continuous yellow light	Standby (ready)
Flashing yellow	Pre-charge
Rapid flashing green	Main charge (rapid charge)
Flashing green	Recharge (maintain)
Rapid flashing yellow	Error
Continuous green light	Ready
Flashing yellow and green	Wait

NOTICE	
	Charge duration/operating duration.
	Charge duration: 2 hours (depending on discharge condition)

4.2.2 Charging the radio remote control

4.2.2.1 Removing the antenna

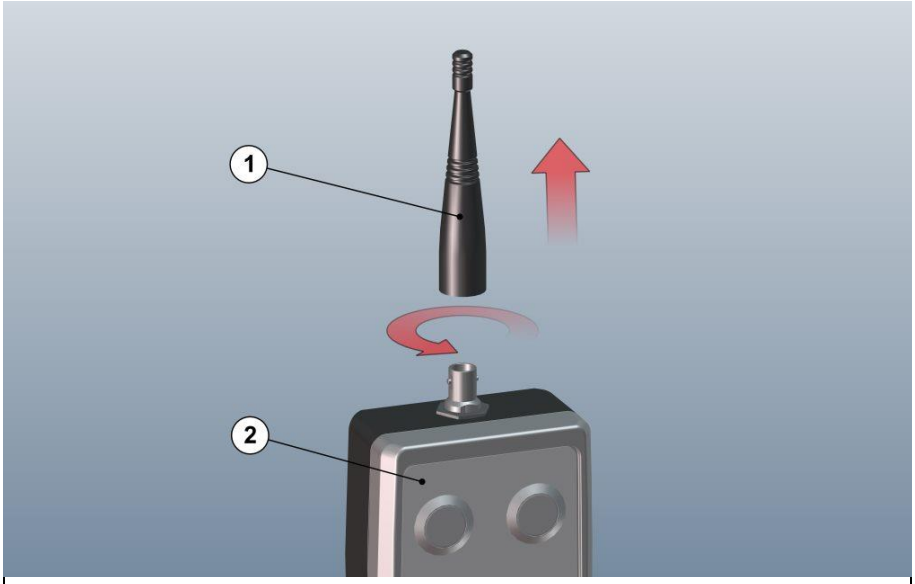

Image 4-5 Removing the antenna

- Removing the antenna (1) from the radio remote control (2)
  - (push antenna together with thumb and finger and turn through 90° counter-clockwise!)

4.2.2.2 Inserting the charger cable

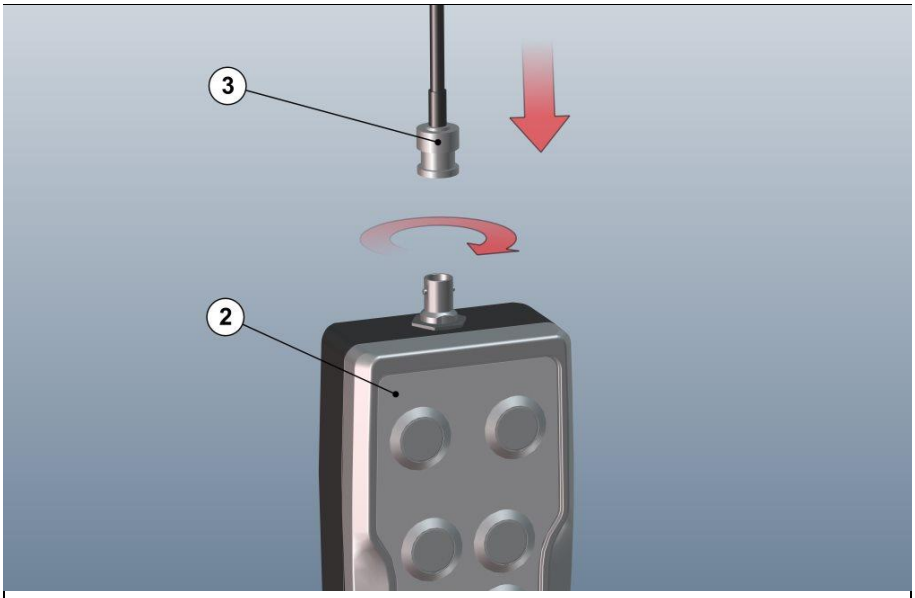

Image 4-6 Charger cable installing

- Insert the charger cable (3) in the radio remote control (2).

4.2.2.3 Inserting the charger into the mains socket

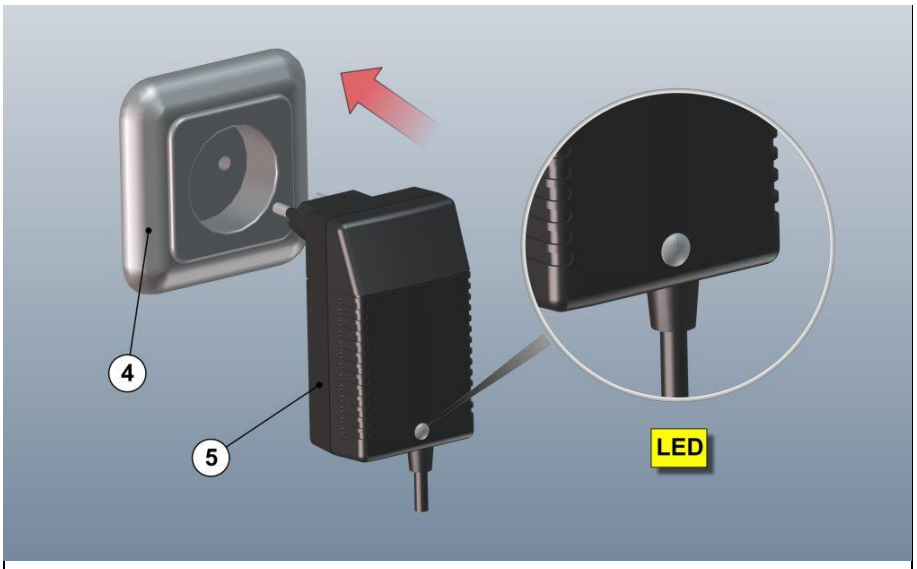

Image 4-7 Inserting the mains plug

- Insert mains plug (5) into 220 V plug socket.

LED	
Color	**Explanation**
Continuous yellow light	Standby (ready)
Flashing yellow	Pre-charge
Rapid flashing green	Main charge (rapid charge)
Flashing green	Recharge (maintain)
Rapid flashing yellow	Error
Continuous green light	Ready
Flashing yellow and green	Wait

NOTICE	
	Charge duration/operating duration.
	Charge duration: 2 hours (depending on discharge condition)

4.2.2.4 Fitting the antenna

Fit the antenna back on the radio remote control again after the charging process and secure with loctite.

5 Operation

5.1 Types of Loading/Max. Weights

5.1.1 Single-leg loading (90°)

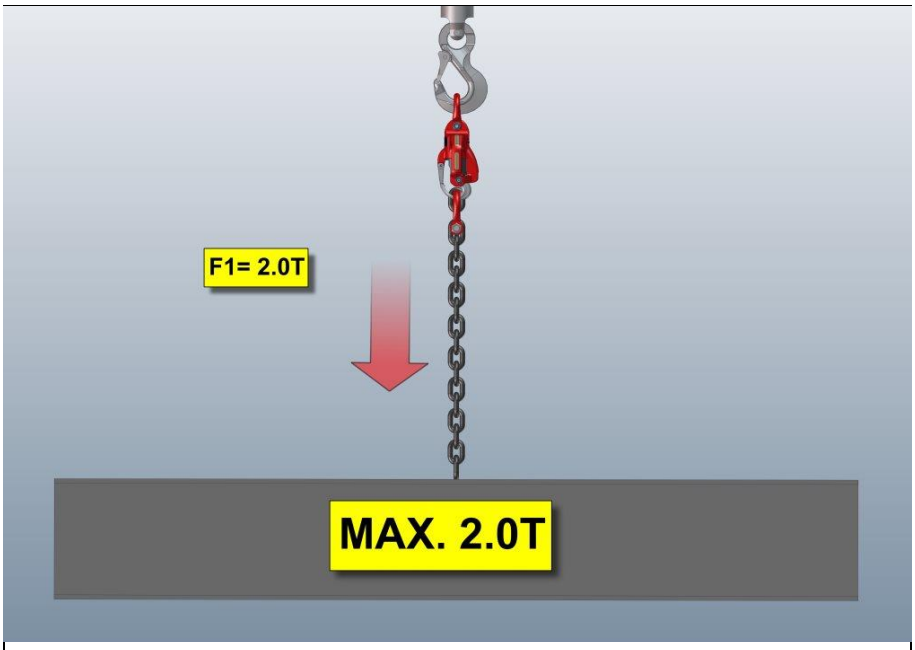

Image 5-1 Single-leg loading (0°)

2.0T (2.000 kg/4,410 lbs)

5.1.2 Two-leg loading

With multiple hangers always only 2 legs to be considered as carrying. The number of carrying legs can be increased by using a balancing device!

5.1.2.1 Two-leg loading (75-90°)

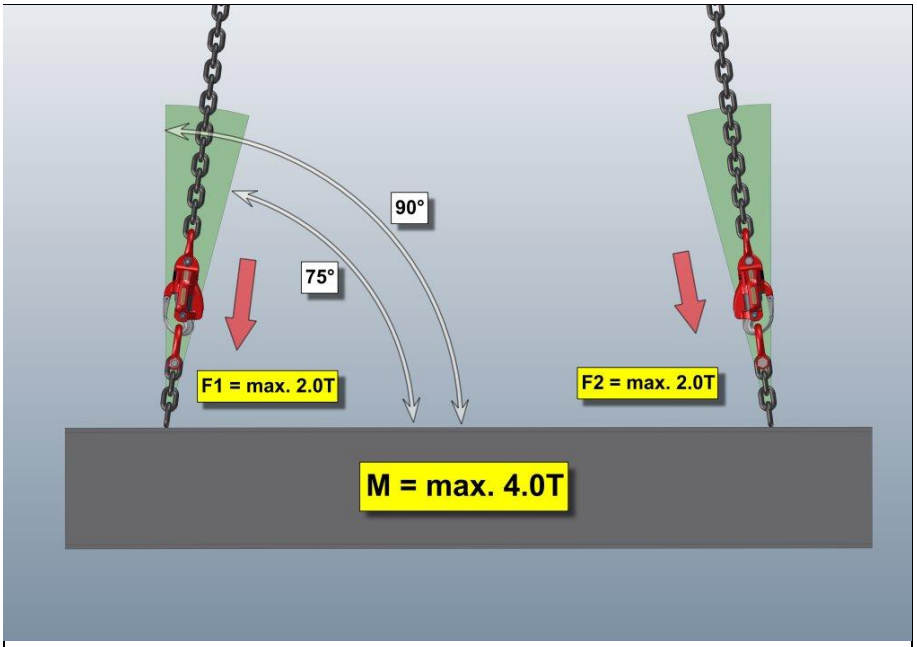

Image 5-2 Two-leg loading (75-90°)

F1/F2 = max. 2.0T (2000 kg/4,409 lbs)

M = max. 4.0T (4.000 kg/8,818 lbs

5.1.2.2 Two-leg loading (45-75°)

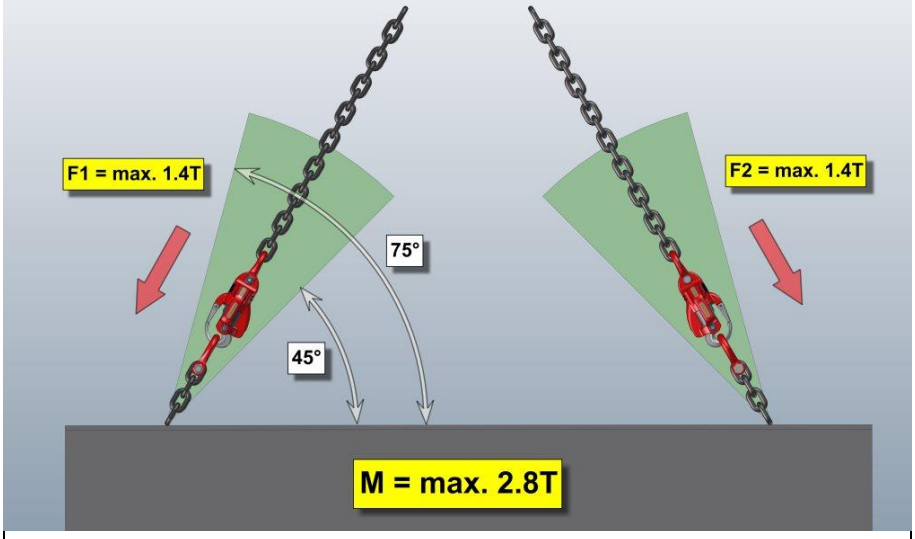

Image 5-3 Two-leg loading (45-75°)

F1/F2 = 1.4T (1.400 kg/3,086 lbs)
M = max. 2.8T (2.800 kg/6,172 lbs)

5.1.2.3 Two-leg loading (30-45°)

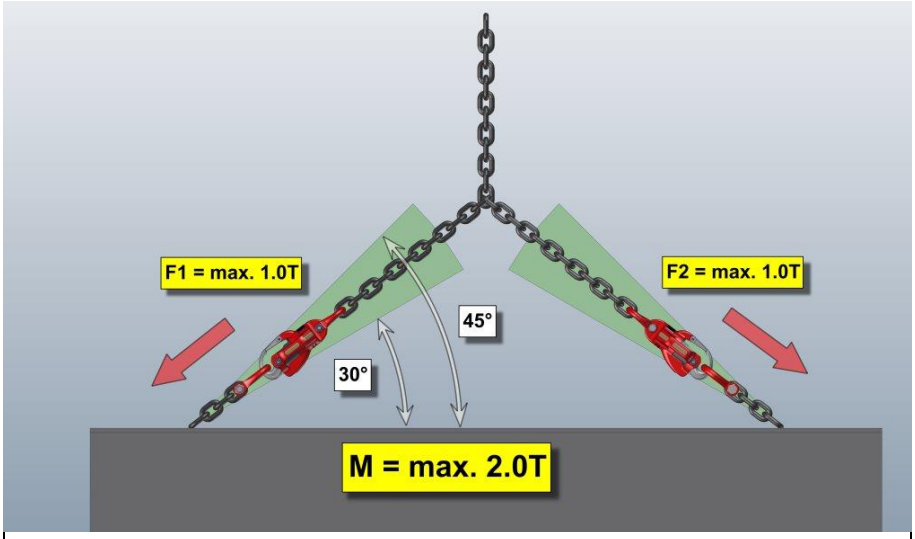

Image 5-4 Two-leg loading (30-45°)

F1/F2 = 1.0T (1.000 kg/2,205 lbs)
M = max. 2.0T (2800 kg/4,409 lbs)

5.2 Types of Loading/Max. Weights (Lifting Strap)

⚠ DANGER	
	Reduction of the maximum payload!. **Serious injuries to death.**
	Avoidance: • Comply with the following payload limits.

⚠ DANGER	
	Moving (rocking) load! **Serious injuries to death.**
	Avoidance: • In this type of slinging, attach the LUDWIG HOOK´s centrally on the load to be lifted, or place the multi-strand slings in such a way that the load is balanced/lifted.

⚠ WARNING	
	Quality lifting strap! **Serious injuries to death.**
	Avoidance: • With this type of slinging you must only use the original lifting strap. • Ludwig System can supply the suitable lifting strap on request.

5.2.1 Single-leg loading

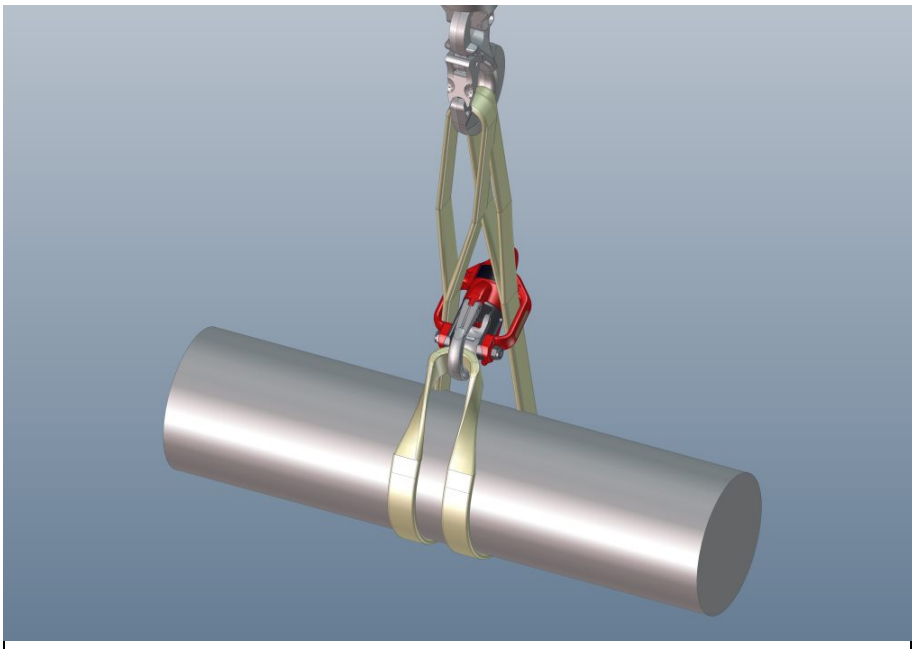

Image 5-5 Lifting strap - single-leg loading

5.2.2 Two-leg loading

5.2.2.1 Two-leg loading (75-90°)

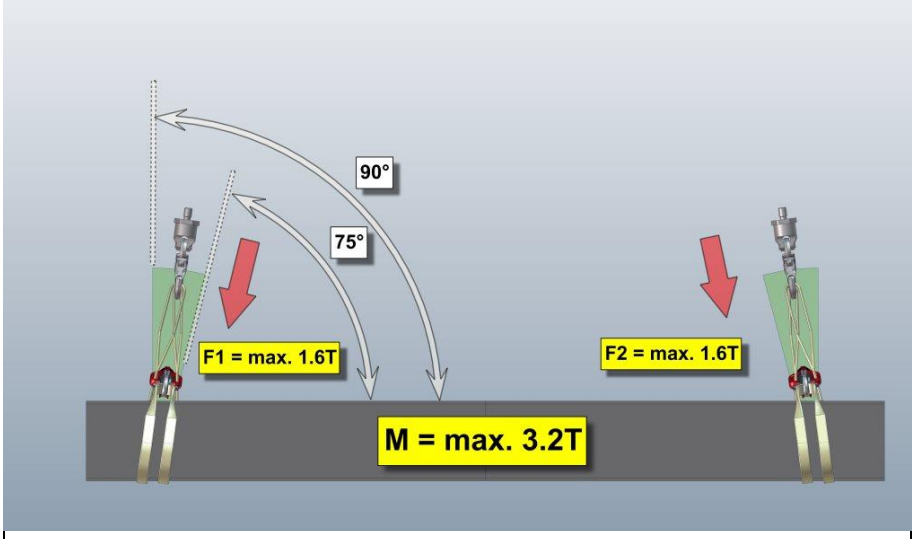

Image 5-6 Two-leg loading (75-90°)

F1/F2 = 1.6T (1.600 kg/3,527 lbs)

M = max. 3.2T (3.200 kg/7,054 lbs)

5.2.2.2 Two-leg loading (45-75°)

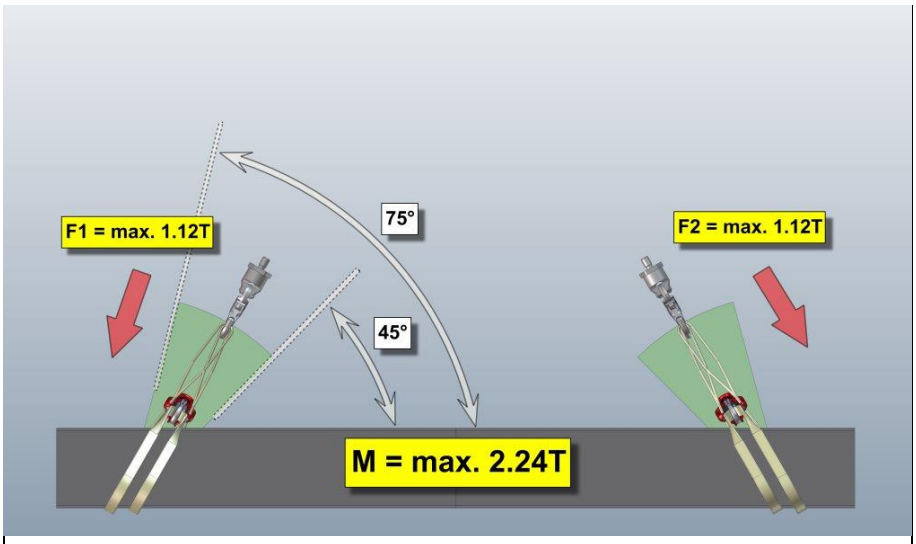

Image 5-7 Two-leg loading (45-75°)

F1/F2 = 1.12T (1.120 kg/2,469 lbs)
M = max. 2.24T (2.240 kg/4,938 lbs)

5.2.2.3 Two-leg loading (30-45°)

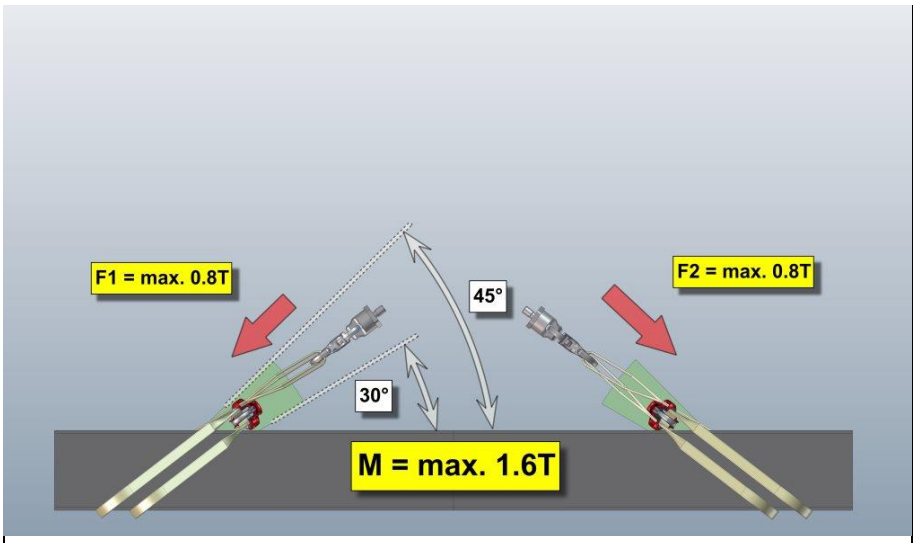

Image 5-8 Two-leg loading (30-45°)

F1/F2 = 0.8T (800 kg/1,764 lbs)
M = max. 1.6T (1.600 kg/3,528 lbs)

5.3 Permissible loading on the hook

⚠ DANGER	
	Risk of hook breakage. **Serious injuries to death.**
	Avoidance: • The hook on the LUDWIG HOOK must only be loaded with ONE sling per slinging point!

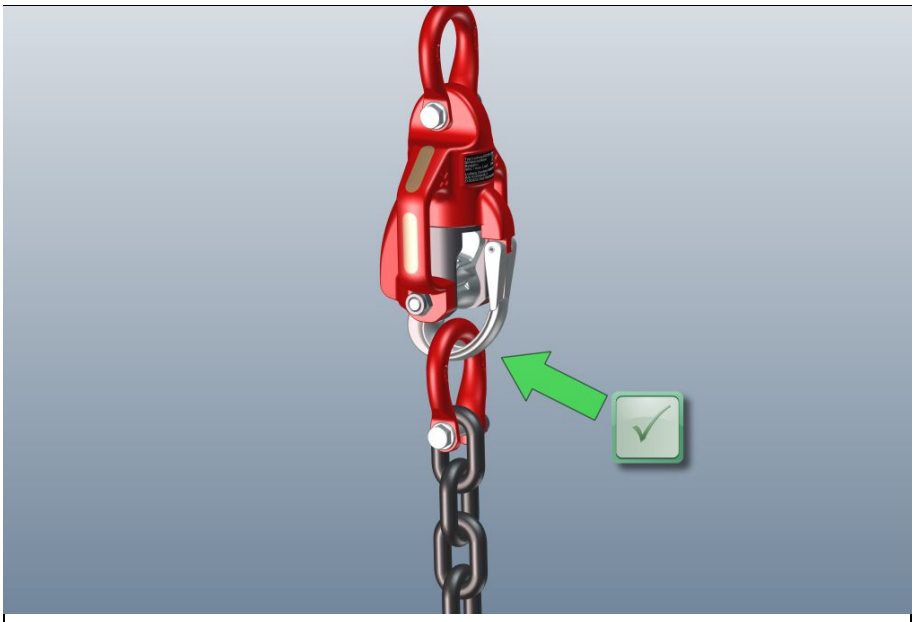

Image 5-9 Permissible loading on the hook: ONE sling

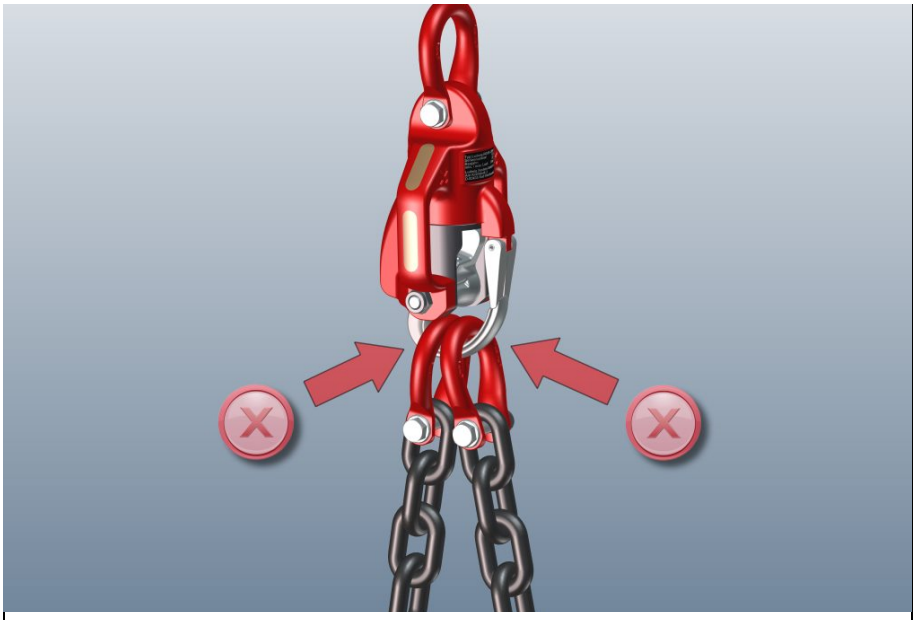

Image 5-10 Prohibited loading on the hook: SEVERAL slings

5.4 Types of slinging equipment

5.4.1 Direct tension

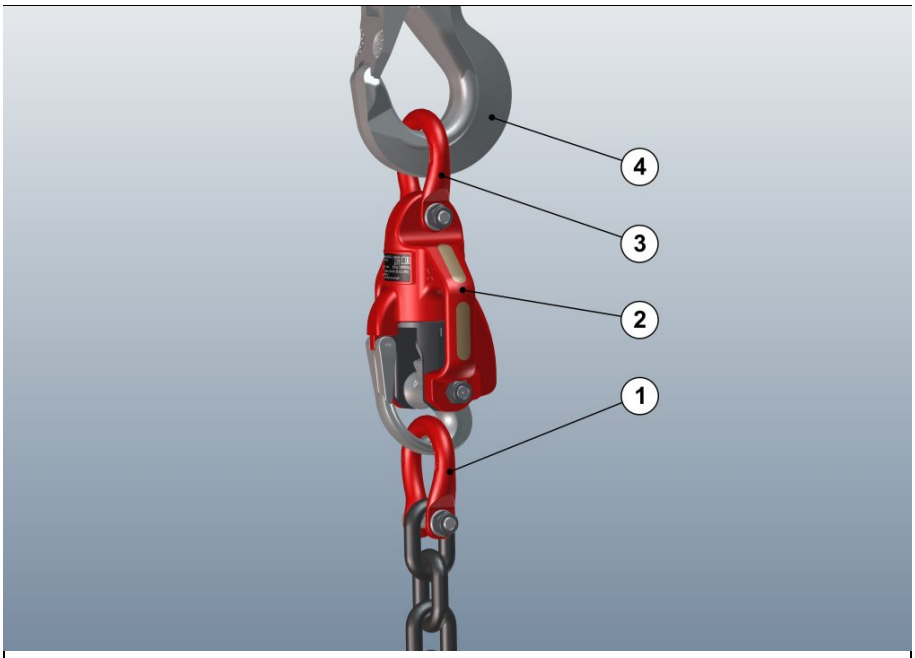

Image 5-11 Slinging type “direct tension”

- Load (1) directly on the hook
- LUDWIG HOOK (2)
- Shackle (3)
- Load hook (4)

5.4.2 Indirect tension

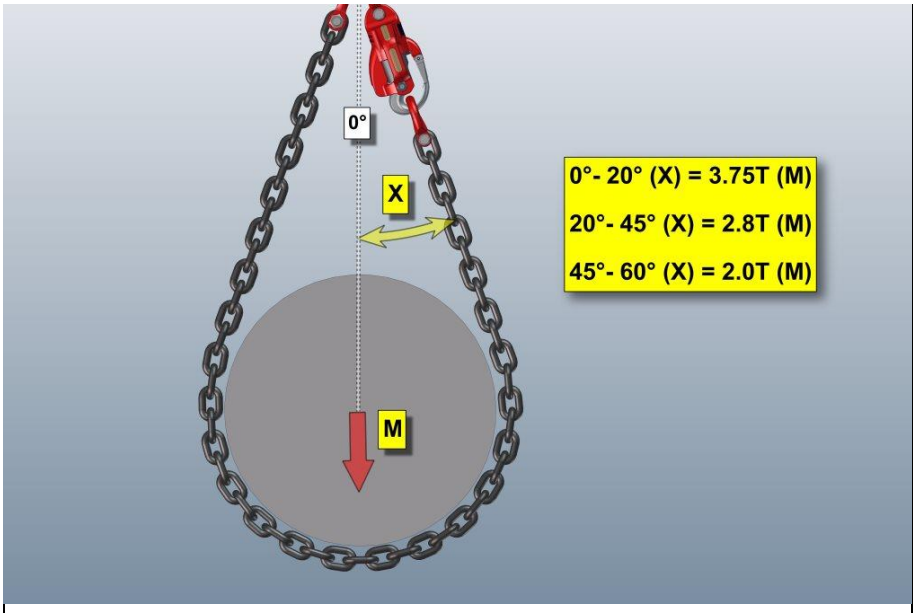

Image 5-12 Indirect tension

- ☞ Hook the end of the chain (A) on the load hook (1).
- ☞ Hook LUDWIG HOOK (2) on the load hook (1).
- ☞ Guide the chain (3) through the eye or around the load (4).
- ☞ Push in the safety latch (5) and suspend the load (4) **INDIRECTLY** via chain end (B) on the LUDWIG HOOK (2) or hook.

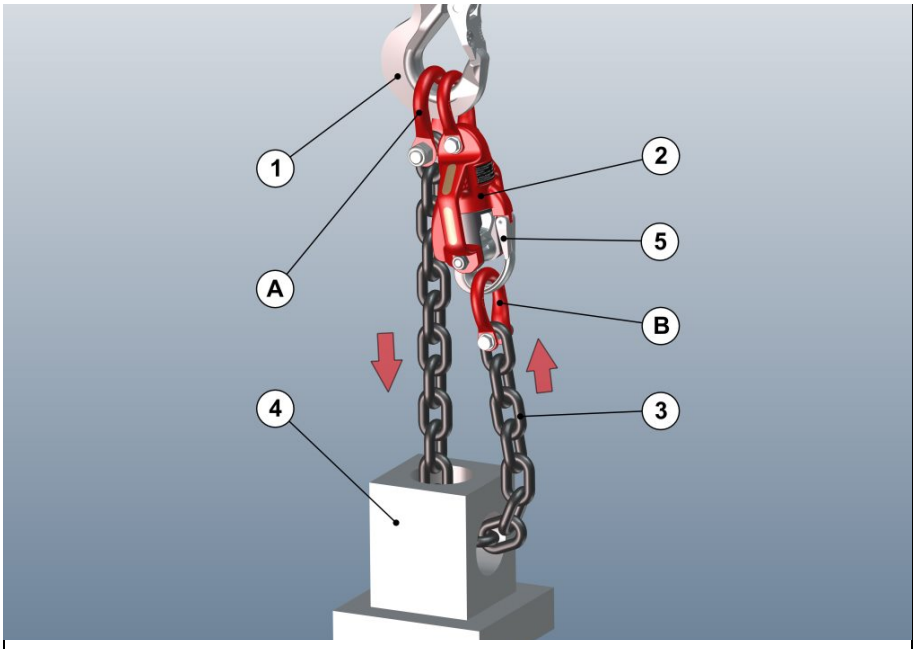

Image 5-13 Load indirectly on Ludwig HOOK

5.4.3 Lifting strap

5.4.3.1 Observe the threading direction

⚠ DANGER	
	Observe the threading direction! **Serious injuries to death.**
	Danger due to bending or breaking of the pawl (load acts on the weaker tip) + risk of damage to the safety latch including falling out of the lifting strap (and thus throwing off the load). **Avoidance:** • Observe the correct threading direction!

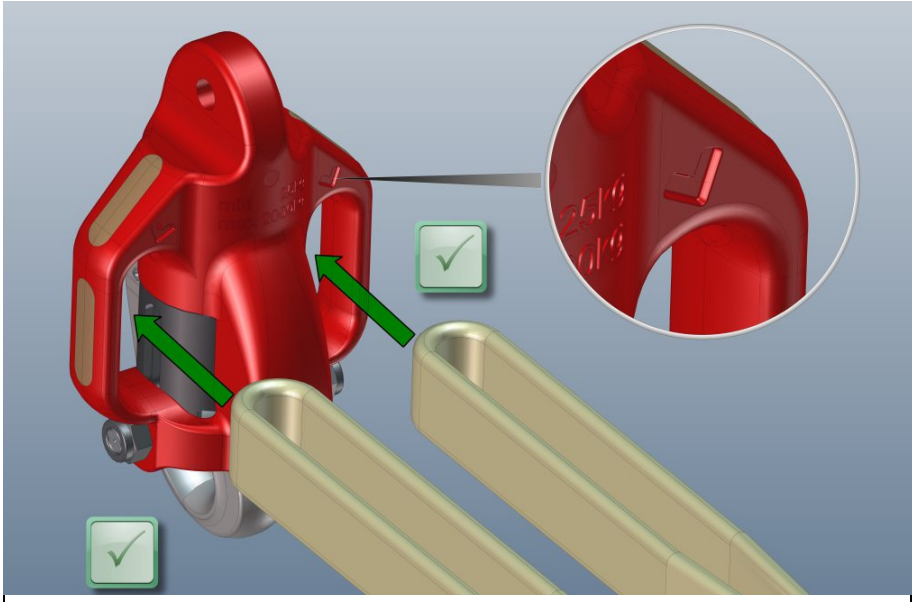

Image 5-14 CORRECT threading direction

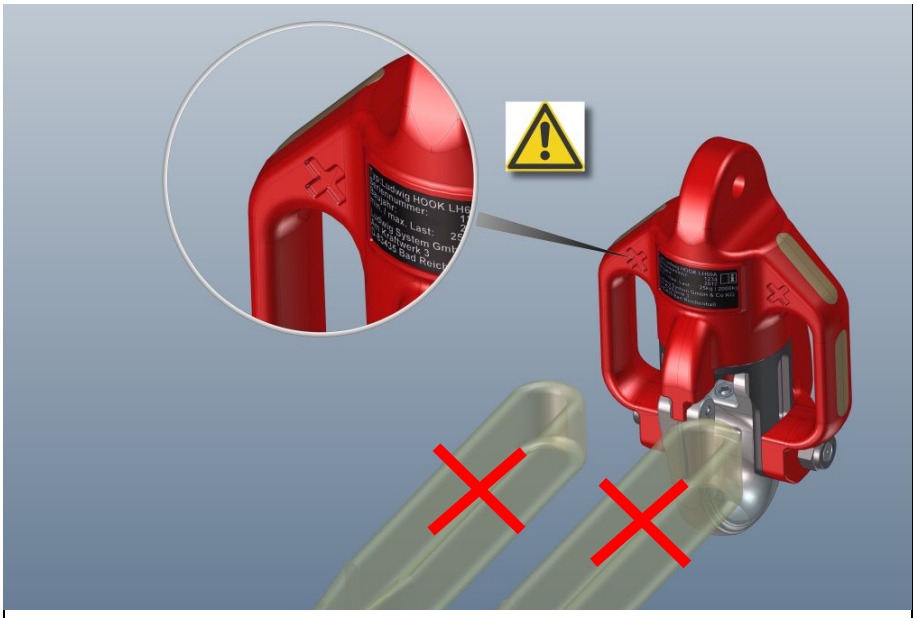

Image 5-15 INCORRECT threading direction

5.5 Before starting work

5.5.1 Check radio remote control

NOTICE	
	Damage to the remote control.
	Operation without connected antenna on the radio remote control is not permitted! **Avoidance:** • Check that the antenna is positioned and secured with loctite. • Check there is no damage on remote and antenna before operating!

5.5.1.1 Carry out tests

☞ (see chapter 2 “Barrier-free environment for radio remote control” on page 2 - 13).

☞ see chapter 2 “Check radio frequency” on page 2 - 14

5.5.1.2 Rubber protection sleeve (option)

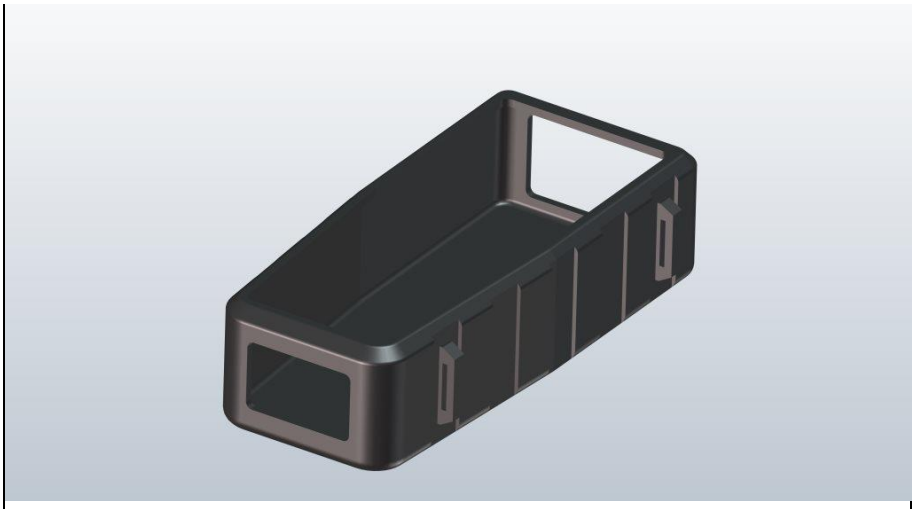

Image 5-16 Rubber protection sleeve

With the optional rubber protection sleeve, the radio remote control is protected all round from impact.

5.5.2 Preparing the LUDWIG HOOK

5.5.2.1 Ludwig Protector (option)

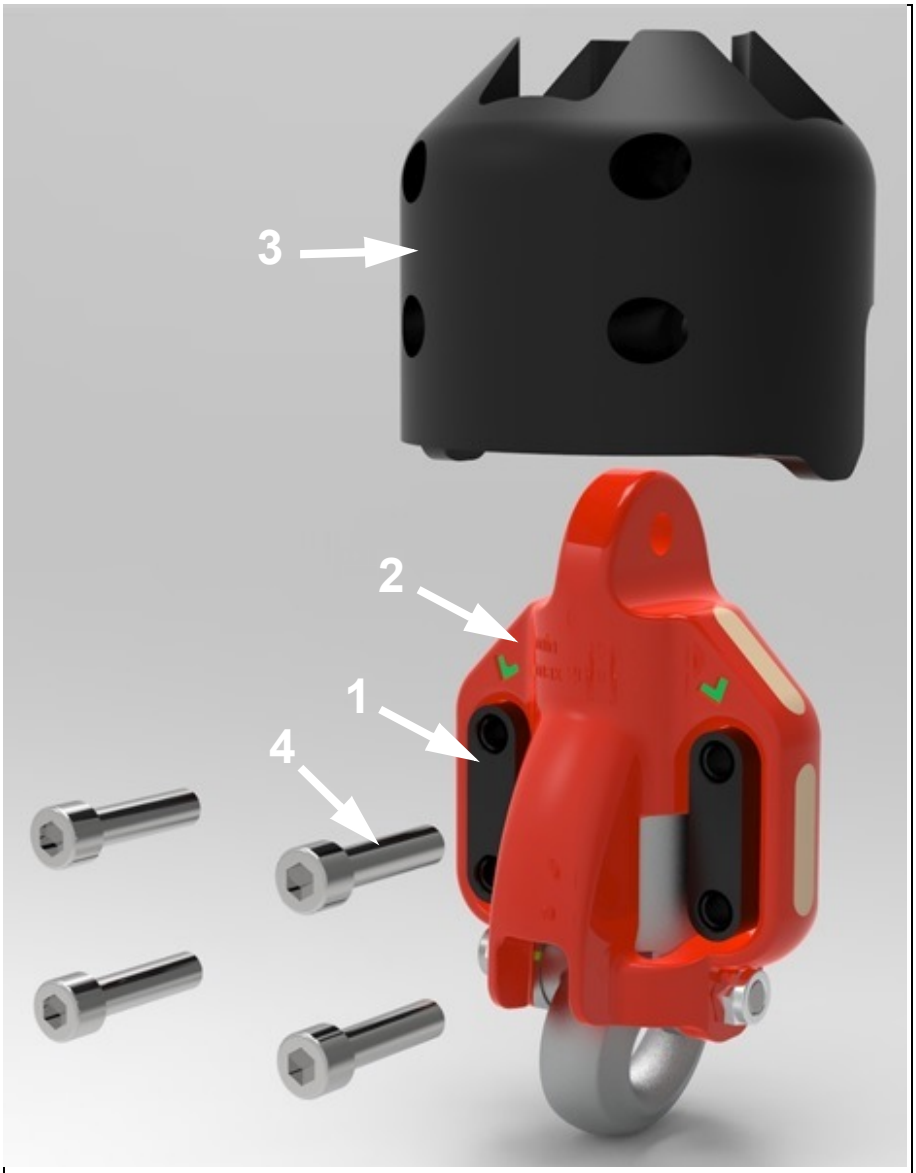

Image 5-17 Fitting the Ludwig Protector (option)

Place the inserter (1) in the LUDWIG HOOK (2). Place the Ludwig Protector (3) over the LUDWIG HOOK and tighten with the cheese-head screws (4).

NOTICE	
	Remove „Ludwig Protector“ when charging.
	Avoidance: • The “Ludwig Protector” protector must be removed for loading the LUDWIG HOOK´s.

NOTICE	
	Can not be used with a lifting strap.
	Avoidance: • It is not possible to use the LUDWIG HOOK´s with a lifting strap (see chapter 5 “Types of Loading/Max. Weights (Lifting Strap)” on page 5 - 4)!

5.5.2.2 Fitting to the crane hook

⚠ WARNING	
	Read and follow these warnings and instructions. **Serious injuries to death.**
	Avoidance: Read and follow these warnings and instructions! • see chapter 5 “Types of Loading/Max. Weights” on page 5 - 1 • see chapter 5 “Types of slinging equipment” on page 5 - 9

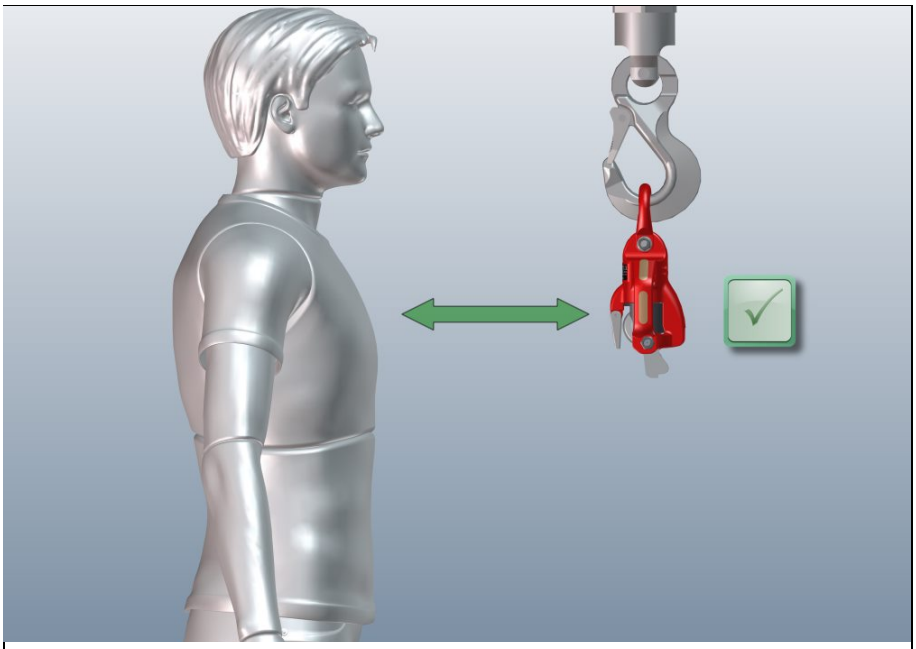

Image 5-18 LUDWIG HOOK at chest height

The crane hook or its linkage/crossbeam must be lowered so that the LUDWIG HOOK can be mounted at chest height.

5.5.2.3 Carry out a function test over 55 lbs

☞ Close the hook (1) - red LED switches on.

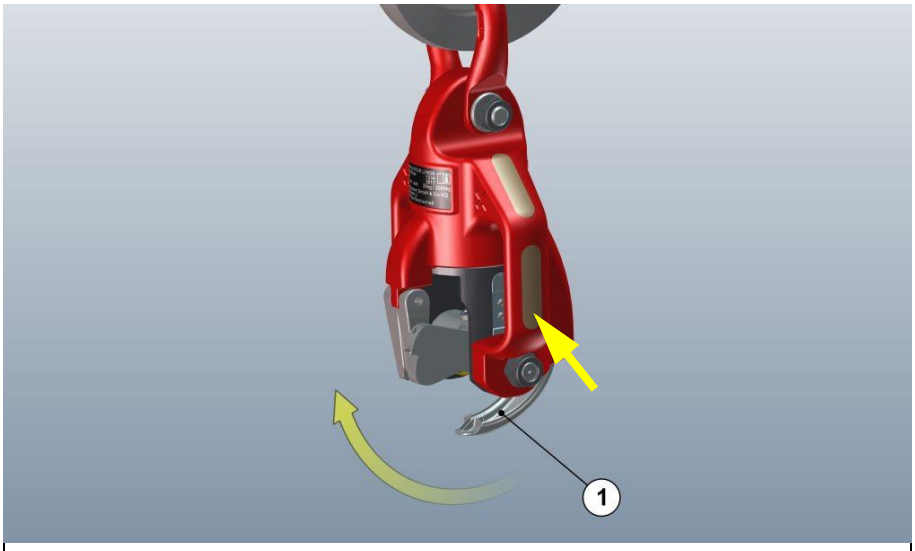

Image 5-19 Closing the hook

☞ Suspend a load (more than 55 lbs) from the hook. The LED on the side of the LUDWIG HOOK switches off. Actuation of the 2 buttons on the remote control remains ineffective.

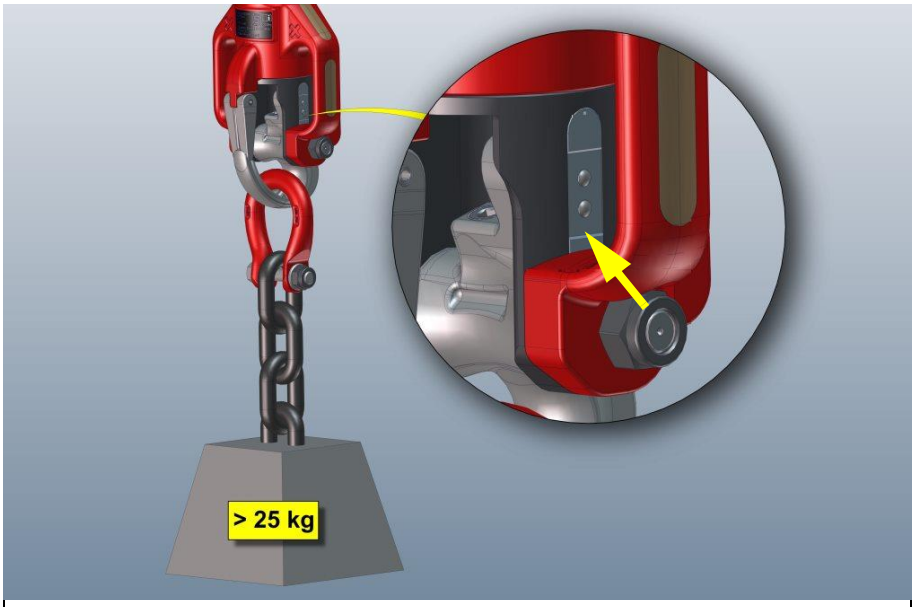

Image 5-20 Load over 55 lbs - LED off.

☞ Only when the load is lowered slowly (unloading the hook) does the red LED come on again.

☞ Opening of the hook is now possible using the radio remote control.

5.6 Suspend the load

5.6.1 Close the hook manually

☞ Turn the hook (1) in the housing up to the stop.

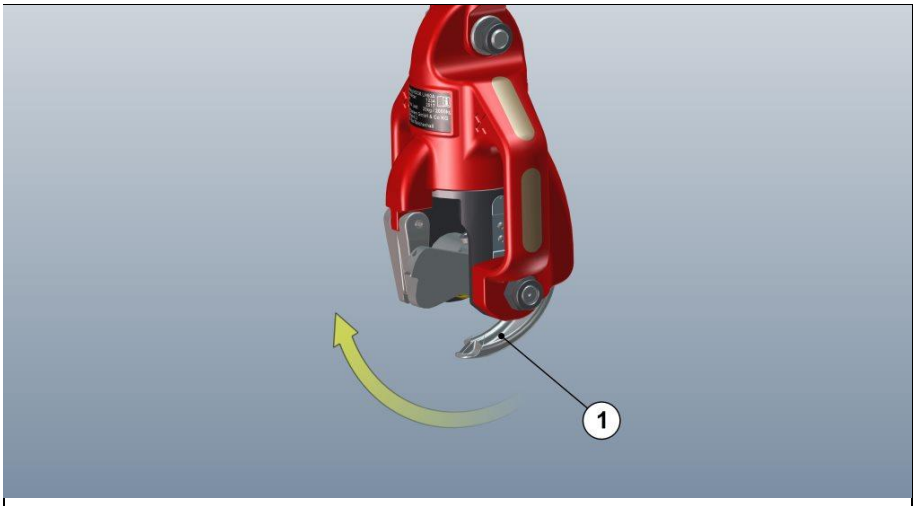

Image 5-21 Close the hook manually

5.6.2 Check the locking pin

⚠ WARNING	
	Locking pin!
	Loads must not be suspended if the locking pin does not come out of the housing completely! **Avoidance:** • Clean the area around the locking pin in the event of dirt contamination! • Check the hook and locking pin for wear. Send the LUDWIG HOOK to the manufacturer if there are signs of wear!

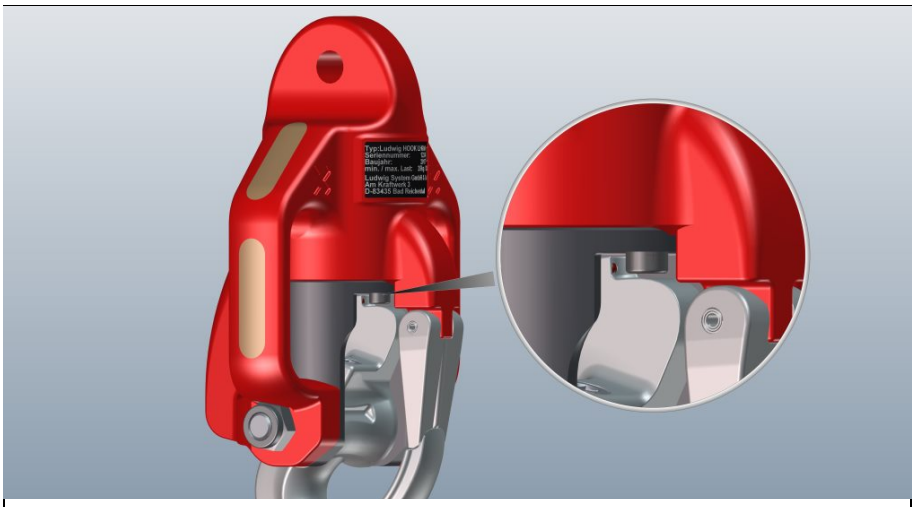

Image 5-22 Check the locking pin

⚠ WARNING	
	Locking pin.
	If the locking pin does not move to a position of "safe lock", it moves back to the starting position, for safety reasons, causing the LUDWIG HOOK XL to open. **Measures:** • In this case, repeat the locking process. If you cannot achieve safe locking, contact the manufacturer or send in the LUDWIG HOOK.

5.6.3 Suspending the load from the hook

☞ Push in the safety latch (1) and suspend the load (2).

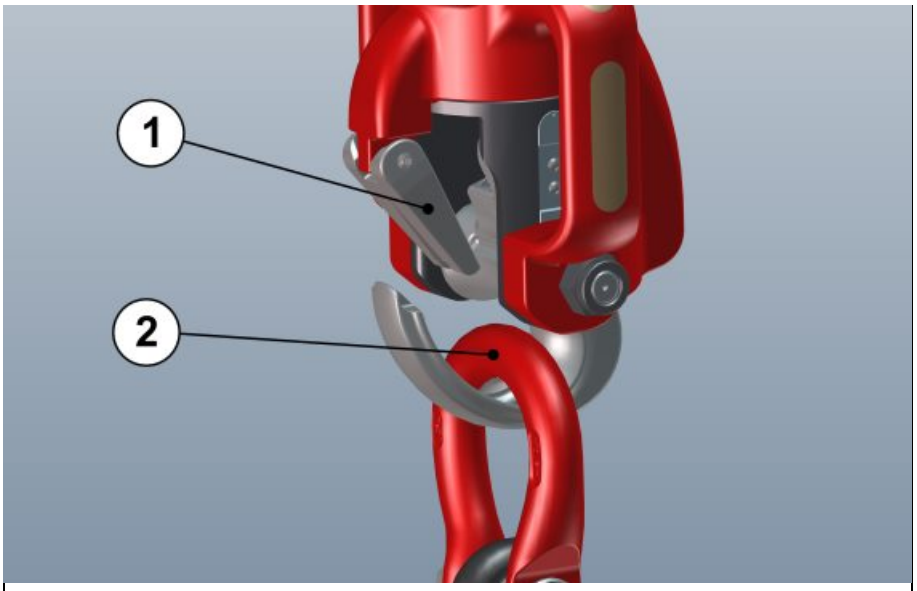

Image 5-23 Pushing in the safety latch

5.7 Setting down the load

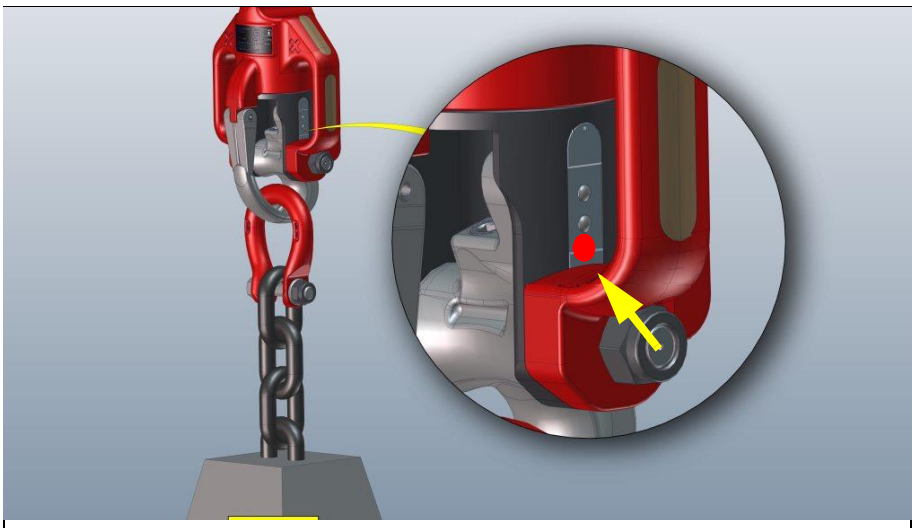

Image 5-24 Suspending a load more than 25 kg

NOTICE	
	LED.
	Avoidance: • The LED only changes from "OFF" to "Red" when the load is gradually lowered (load on the hook under 55 lbs). Opening of the hook is now possible using the radio remote control.

5.8 Releasing the load by radio

5.8.1 Single actuation

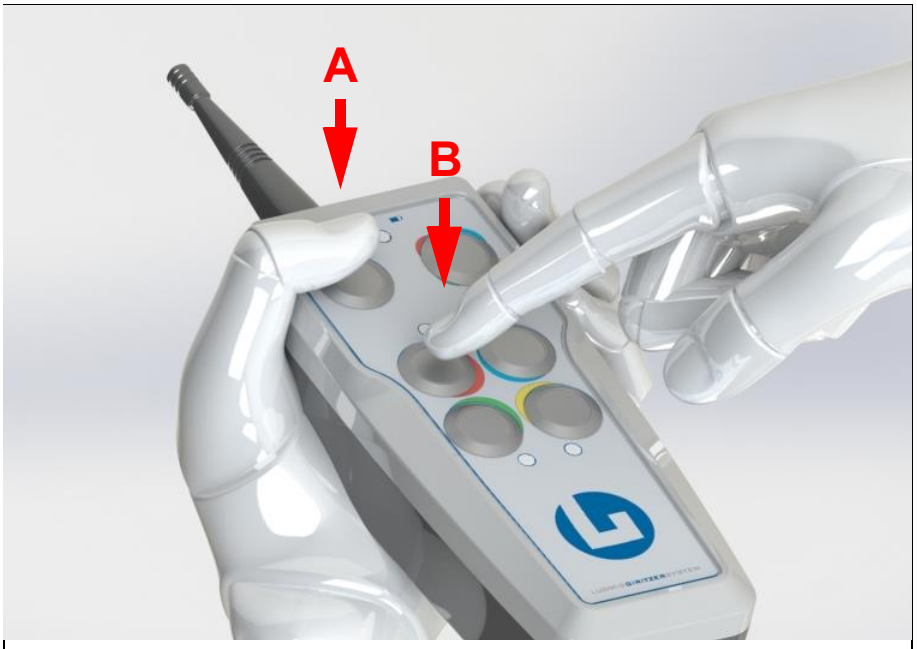

Image 5-25 Single actuation

☞ Hold down the operating button (A) and, within 0.5 sec., push one of the 4 desired actuation buttons (B).
- Red LUDWIG HOOK
- Blue LUDWIG HOOK
- Green LUDWIG HOOK
- Yellow LUDWIG HOOK

☞ Result: The hook on the color assigned LUDWIG HOOK releases the load with a delay of approx. 2 secs.

NOTICE	
	Wrong usage.
	Actuation in reverse sequence (i.e. first actuation button (B) and then operating button (A) or simultaneous actuation of both buttons) will result in no radio signal being sent to the LUDWIG HOOK. This condition is indicated by a flashing red LED. **Remedy:** • Wait until the LED goes out and carry out correct actuation again.

5.8.2 Group actuation

Image 5-26 Group actuation

☞ Push the operating button (A) and then the group button (C) within 0.5 secs.

☞ Result: All the hooks on the LUDWIG HOOK release the load with a delay of approx. 2 secs.

5.9 After finishing work

5.9.1 Carry out suspended from the crane

The following steps must be taken at break times and after finishing work:

- Open LUDWIG HOOK by radio. No power is consumed in this condition and the service life of the battery will be increased considerably!
- If necessary, remove the LUDWIG HOOK and load at the loading station!
- Clean LUDWIG HOOK and spray locking pin with WD 40!

5.9.2 In extreme weather

Extremely cold temperatures will reduce the service life of the batteries.

- Open LUDWIG HOOK by radio.
- Remove LUDWIG HOOK from crane or load slinging equipment.
- Clean LUDWIG HOOK and spray locking pin with WD 40.
- Store LUDWIG HOOK and radio remote control in a heated room.

5.10 Storage

NOTICE	
	Storage.
	Measure: • Before storage: LUDWIG HOOK and fully charge remote control! Storage in the discharged state can lead to damage to the batteries. • If the LUDWIG HOOK is stored under tension, there is a danger of deep discharge of the batteries. • The batteries must be charged every 4 months with long periods on non-use.

6 Disposal and recycling

6.1 Environmental Protection

During all work on LUDWIG HOOK all legal regulations regarding waste avoidance and correct disposal / recycling must be observed!

During maintenance work, water-damaging materials such as lubricants and oils must not be released into the ground or allowed to enter the sewage system! These substances must be kept, transported and disposed of in suitable containers.

6.2 Disposal

If the LUDWIG HOOK is finally decommissioned, the laws and regulations for disposal applicable at this time must be observed and followed.

Always establish which materials can be forwarded for recycling. These must then be recycled by a suitable waste disposal company.

6.3 Battery recycling

⚠ NOTICE	
	• Batteries and rechargeable batteries must not be disposed of in the household waste, and you are legally obligated to return used batteries and rechargeable batteries. • You can either return the batteries to us after use or return them in the immediate vicinity (for example, in stores or municipal collection points). • Batteries and rechargeable batteries contain toxic materials that exceed the legal thresholds are marked with the crossed out trash container symbol and the chemical symbol of the individual toxic material

The abbreviations mean:

- Cd (Cadmium)
- Li (Lithium) / Li-Ion (Lithium ions)
- Ni (Nickel)
- Mh (Metal hydride)
- Pb (Lead)
- Zi (Zinc)
- Hg (Mercury)

7 Maintenance/problem treatment

7.1 Maintenance by the operator

7.1.1 Lubrication/cleaning

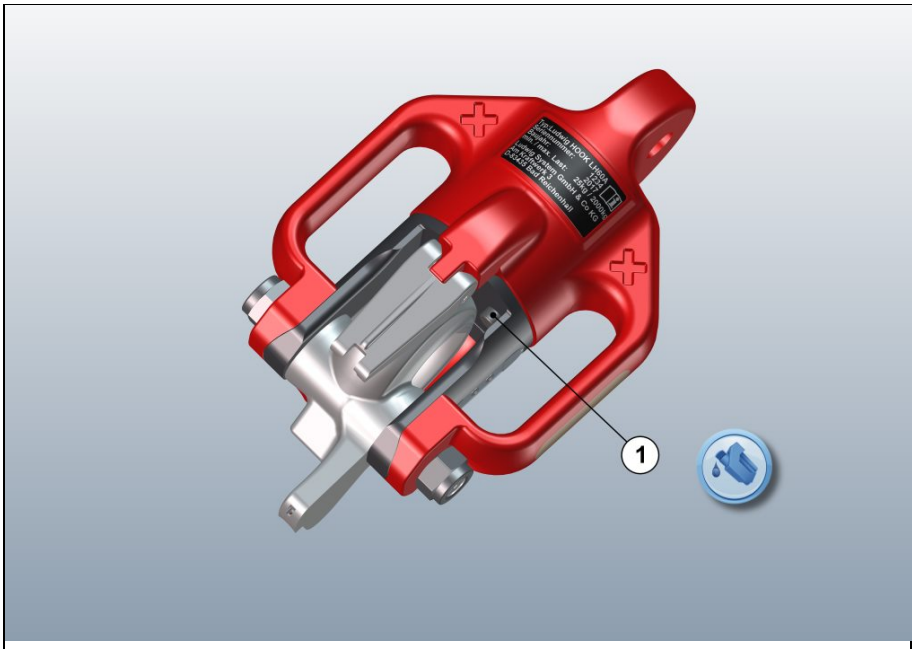

Image 7-1 Lubrication

Lubrication		
Item	**Name**	**Interval**
1	Lubricate locking pin*	monthly
	Cleaning	if necessary
	* use penetrating oil (e.g.: WD 40)	

7.1.2 Function check and cleaning

⚠ WARNING	
	At least once every charging cycle.
	At least once per deployment: • check for detectable external damage and faults! • check for wear on the locking pin (1) and hook (3)! • Carry out a function check! Immediately report any changes (including battery behavior) to the department/person responsible! Faults must be eliminated immediately!

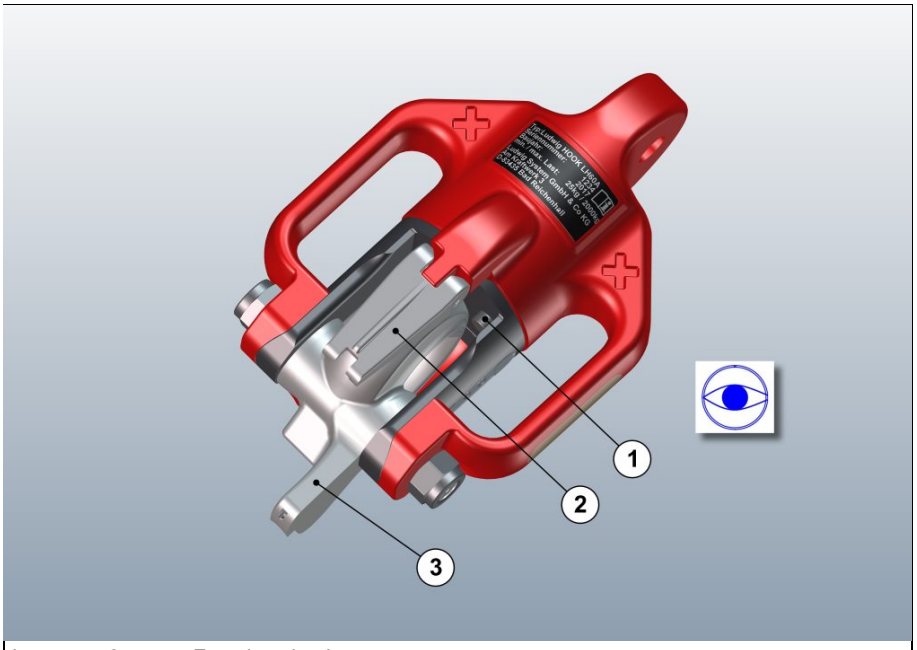

Image 7-2 Function check

Function check and cleaning		
Item	**Name**	**Interval**
1	Mechanism locking pin.	daily
	a) By pressing the operating button and the actuation button in the correct sequence on the radio remote control (locking pin moves in the housing) the LUDWIG HOOK opens up.	
	b) Check movements of the locking pin (1) by loading the hook (3).	
2	Check the movement of the safety latch (2).	daily
3	Check the movement of the hook (3).	daily

Function check and cleaning		
4	Clean the LUDWIG HOOK as required.	daily

⚠ CAUTION	
	Pinch. **Finger injuries.** Observe residual dangers from hook and locking pin: see chapter 2 “Notes concerning specific types of danger” on page 2 - 15.

7.2 Replacing the battery

These batteries are checked during the annual inspection, and replaced if necessary:

- Battery LUDWIG HOOK
- Battery radio remote control

NOTICE	
	Battery recycling.
	see chapter 6 “Battery recycling” on page 6 - 1.

7.3 Maintenance/checking

7.3.1 Frequent inspection

NOTICE	
	Monthly inspection.
	Visual examinations by a designated person of the customer should be conducted at least monthly, based on maintenance program at paragraph 7.1!

7.3.2 Annual maintenance

Maintenance and repair must be carried out 1x per year exclusively by the manufacturer or an authorized service partner.

- Function check (and testing the carrying elements)
- Maintenance
- Repair
- Premature replacement of wear parts (e.g. actuator, locking pin, axle, batteries)

NOTICE	
	Yearly maintenance.
	The manufacturer will provide information about an upcoming annual maintenance!

7.3.3 Test

⚠ WARNING	
	Test.
	The annual maintenance does not replace the country-specific regulations concerning regular testing of load slinging equipment. The user is obligated to obtain information concerning the regulations applicable to him and to appoint a capable service provider to carry out this test!

7.4 Problem treatment

Problem treatment		
Problem	Possible cause	Remedy
LUDWIG HOOK		
LED on LUDWIG HOOK does not light up.	- Error: flat battery.	Charge battery!
LED on LUDWIG HOOK flashes red.	- Low battery.	Charge battery!
LUDWIG HOOK will not open.	- flat battery (LUDWIG HOOK) - flat battery (radio remote control)	Charge battery!
	- LUDWIG HOOK out of range.	Reduce the distance!
	- LUDWIG HOOK is loaded. (Unlocking block)	Lower the load further!
	- defective LUDWIG HOOK. - defective radio remote control.	Send to the manufacturer!
Locking pin does not come out of the housing.	- Servo motor defective. - poor lubrication.	Immediately take out of service and send to manufacturer!
LED lights up red continuously. Locking pin automatically moves upwards after locking and opens the LUDWIG HOOK .	Dirt contamination in the notch on the hook prevents full safe locking.	Clean the notch!
LED on LUDWIG HOOK flashes red continuously. Locking pin has moved up in the housing.	The locking pin has not found the position of a full and safe lock (after 20 locking attempts).	Send to the manufacturer!
Hook does not turn or moves only with difficulty.	- Spring defective/jammed. - poor lubrication.	Send to the manufacturer!
Bad range of one or all LUDWIG HOOK.	- flat battery (transmitter or receiver).	Charge battery!
	- Radio transmitter/antenna defective.	Send to the manufacturer!
	- Radio receiver/antenna defective.	Send to the manufacturer!
Flashing of the upper LEDs on the remote control (2x one after the other 4x rapid).	- Incorrect operation	Wait for the flashing procedure and push the keys in the correct sequence within a period of 0.5 sec!
Radio remote control		
Rapid flashing of the LED operating button radio remote control.	- flat battery.	Charge battery!

8 Technical data

8.1 General points

Technical data - general	
Minimum load (direct/indirect tension)	55/110 lbs (25/50 kg)
Safety level	Design Category B - Service Class 0
Category	3
Service life	7 years
Max. permissible load cycles	20.000

8.2 Loading

8.2.1 Single-leg loading

8.2.1.1 Directly

see chapter 5 “Single-leg loading (90°)” on page 5 - 1	
90°	2.0T (4,410 lbs)

8.2.1.2 Directly (Lifting strap)

see chapter 5 “Single-leg loading” on page 5 - 5	
90°	1.6T (3,527 lbs)

8.2.1.3 Indirectly

see chapter 5 “Indirect tension” on page 5 - 10	
0° - 20°	3.75T (8,267 lbs)
20° - 45°	2.8T (6,173 lbs)
45° - 60°	2.0T (4,410 lbs)

8.2.2 Two-leg loading (directly)

see chapter 5 “Two-leg loading” on page 5 - 2	
75° - 90°	2.0T / 2.0T (4,410/4,410 lbs)
45° - 75°	1.4T / 1.4T (3,087/3,087 lbs)
30° - 45°	1.0T / 1.0T (2,205/2,205 lbs)

8.2.3 Two-leg loading (Lifting strap directly)

see chapter 5 “Two-leg loading” on page 5 - 5	
75° - 90°	1.6T / 1.6T (3,527/3,527 lbs)
45° - 75°	1.12T / 1.12T (2,469/2,469 lbs)
30° - 45°	0.8T / 0.8T (1,764/1,764 lbs)

8.3 Electrical

Technical data - electrical	
Battery type LUDWIG HOOK	NiMH 4.8 V
Battery type radio remote control	NiMH 4.8 V
Operational radio range	164 ft (50 m)
Radio frequency	Between 913,7 and 919 MHz
Transmitter output power	25 mW
Charger type	Friwo FW 7219/NI4-10NTC
Input voltage charger	100 to 240 V (± 10 %)
Input current	0.25 – 0.3 A
Frequency	50-60 Hz
Efficiency	75 % typ. Full load

8.4 Dimensions

Dimensions	
LUDWIG HOOK	
Width	4.72 in (120 mm)
Height (without shackle)	7.83 in (199 mm)
Depth	4.01 in (102 mm)
Radio housing	
Width	3.14 in (80 mm)
Height	7.08 in (180 mm)
Depth	1.65 in (42 mm)

8.5 Weight

Weight	
LUDWIG HOOK	approx. 6.17 lbs (2.8 kg)
Remote control	approx. 1.54 lbs (0.7 kg)

8.6 Ambient conditions

8.6.1 Operation

Operation	
Cold	-15 °C (5° F)
Dry heat	60 °C (140° F)
Protection rating (water and dust)	IP 54

8.6.2 Charging

Charging	
Humidity	max 70 %
Temperature	0 - 40 °C (32-104° F)

8.6.3 Storage

Storage	
Cold	-20°C (- 4° F)
Dry heat	70°C (158° F)

8.6.4 Operation/storage charger

Operation/storage charger	
Operating temperature	0 - 40°C (32-104° F)
Storage temperature	- 20 to 70°C (-4 to 158° F)
Humidity	5 % to 95 % non-condensing

9 Warranty

Ludwig Systems warrants to the Purchaser that the equipment purchased from Ludwig Systems is free from defects in material and workmanship for a period of twelve (12) months from the date of delivery. Ludwig System's obligation under this warranty is strictly and exclusively limited to furnishing repairs or replacements for equipment determined to be defective on inspection by an authorized representative of Ludwig Systems, provided that:

- the equipment is used and maintained by Purchaser in accordance with Ludwig System's applicable instructions/manuals and industry standards.
- the equipment has not been modified from its original condition.
- Purchaser gives prompt written notice to Ludwig Systems before the end of the warranty period specifying all alleged defects in the equipment purchased.
- and Purchaser preserves and turns over to Ludwig Systems or permits reasonable inspection by Ludwig Systems of all allegedly defective equipment.

UNLESS OTHERWISE EXPRESSLY STATED IN ANY DOCUMENT ATTACHED TO THESE TERMS AND CONDITIONS, THIS WARRANTY OF MATERIAL AND WORKMANSHIP IS THE ONLY WARRANTY MADE BY LUDWIG SYSTEMS AND IS IN LIEU OF ALL OTHER WARRANTIES, EXPRESS OR IMPLIED, AND LUDWIG SYSTEMS DISCLAIMS ON BEHALF OF ITSELF AND ITS SUPPLIERS ANY AND ALL IMPLIED WARRANTIES, INCLUDING, WITHOUT LIMITATION, WARRANTIES OF MERCHANTABILITY, FITNESS FOR A SPECIFIC PURPOSE, SUITABILITY OR PERFORMANCE.

No other promise or affirmation of fact shall constitute a warranty of LUDWIG SYSTEMS or give rise to any liability or obligation on the part of LUDWIG SYSTEMS.

10 Standards/regulations

This device complies with part 15 of the FCC Rules and Innovation, Science and Economic Development Canada's licence-exempt RSS standard(s). Operation is subject to the following two conditions:

- This device may not cause interference; and
- This device must accept any interference, including interference that may cause undesired operation of the device. Changes or modifications not expressly approved by the party responsible for compliance could void the user's authority to operate the equipment.

Traduction française:

Cet appareil est conforme à la partie 15 des règles FCC et aux normes RSS sur les exemptions de licence d'Innovation Sciences et Développement Économique au Canada . La mise en œuvre est sujette au respect des deux conditions suivantes

- *Cet appareil ne doit pas causer d'interférence nuisible*
- *Cet appareil doit permettre toute interférence reçue, y compris les interférences pouvant causer des dysfonctionnements. Les changements et modification non expressément approuvés par l'autorité responsable de la conformité pourraient entraîner une interdiction d'opérer pour l'utilisateur.*

NOTICE	
	This equipment has been tested and found to comply with the limits for a Class A digital device, pursuant to part 15 of the FCC Rules. These limits are designed to provide reasonable protection against harmful interference when the equipment is operated in a commercial environment. This equipment generates, uses, and can radiate radio frequency energy and, if not installed and used in accordance with the instruction manual, may cause harmful interference to radio communications. Operation of this equipment in a residential area is likely to cause harmful interference in which case the user will be required to correct the interference at his own expense. *Traduction française:* *Cet équipement a été testé et déclaré conforme aux limites d'un appareil numérique de classe A, conformément à la partie 15 des règles de la FCC. Ces limites sont conçues pour fournir une protection raisonnable contre les interférences nuisibles lorsque l'équipement est utilisé dans un environnement commercial. Cet équipement génère, utilise et peut émettre de l'énergie de radiofréquence et, s'il n'est pas installé et utilisé conformément au manuel d'instructions, peut provoquer des interférences nuisibles aux communications radio. Le fonctionnement de cet équipement dans une zone résidentielle est susceptible de provoquer des interférences nuisibles, auquel cas l'utilisateur devra corriger les interférences à ses propres frais.*

Compliant with following North American standards:

- ASME B30.20
- ASME - BTH-1 Design Category B - Service Class 0
- FCC47 - Part 15 Subpart B
- UL 508
- UL 1310
- ICES-0003
- IC RSS-247
- CSA C22.2 No 14-13

Compliant with following international standards:

- IEC 60601-1
- IEC 60335:1
- IEC 60335:2
- IEC 62368-1

Dealer’s Stamp

LUDWIGSYSTEM

Ludwig System GmbH & Co KG, Reichenhaller Straße 109, 83435 Bad Reichenhall, Germany

Tel.: +49 8651 7656730, info@ludwigsystem.com, www.ludwigsystem.com