Commercial Electric™

Item #1005 172 723
Model #DT8800-16F

USE AND CARE GUIDE

16 FT. INDOOR RGB LED TAPE LIGHT KIT

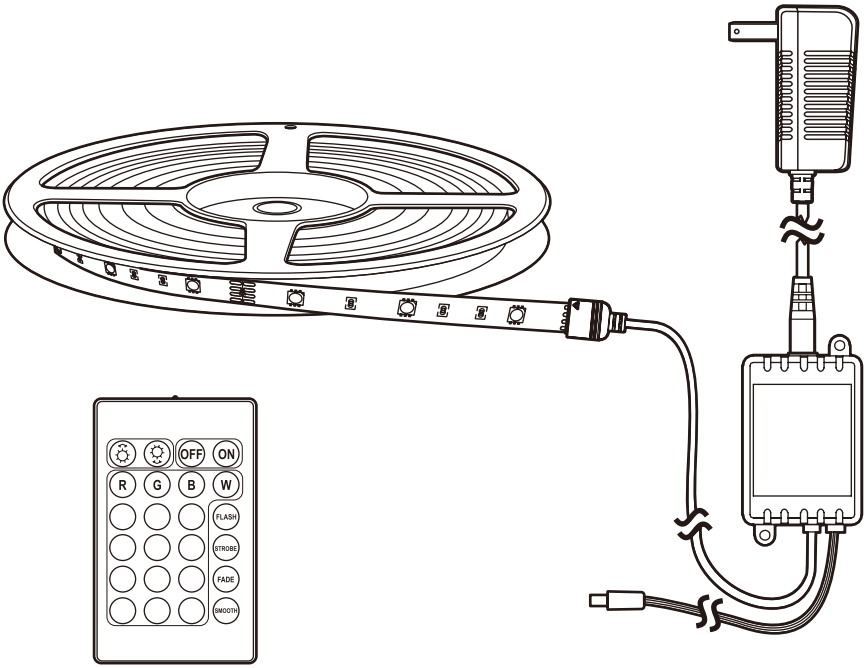

Questions, problems, missing parts? Before returning to the store,
call Commercial Electric Customer Service
8 a.m. - 7 p.m., EST, Monday - Friday, 9 a.m. - 6 p.m., EST, Saturday

1-877-527-0313

HOMEDEPOT.COM

THANK YOU

We appreciate the trust and confidence you have placed in Commercial Electric through the purchase of this tape light. We strive to continually create quality products designed to enhance your home. Visit us online to see our full line of products available for your home improvement needs. Thank you for choosing Commercial Electric!

Table of Contents

Safety Information....2
Warranty....2
Pre-Installation....3
Installation....4
Installation....5
Remote Control Operation....6
Care and Cleaning....6
Battery Safety....6

Safety Information

Read and understand this entire manual before you attempt to install or operate this product.

- This tape light is intended for indoor use only.
- This tape light is not intended for commercial use.
- Do not expose the tape light to excessive heat or moisture.
- Ensure the connectors are securely fastened before operating the tape.

WARNING: Changes or modifications to this unit not expressly approved by the party responsible for compliance could void the user's authority to operate the equipment. Do not damage or crimp the cable. Do not allow the cable to come into contact with sharp objects.

CAUTION: Do not look directly at the tape light when it is illuminated. Eye damage could occur.

NOTICE: This equipment has been tested and found to comply with the limits for a Class B digital device, pursuant to Part 15 of the FCC Rules. These limits are designed to provide reasonable protection against harmful interference in a residential installation. This equipment generates, uses and can radiate radio frequency energy and, if not installed and used in accordance with the instructions, may cause harmful interference to radio communications. However, there is no guarantee that interference will not occur in a particular installation. If this equipment does cause harmful interference to radio or television reception, which can be determined by turning the equipment off and on, the user is encouraged to try to correct the interference by one or more of the following measures:

- Reorient or relocate the receiving antenna.
- Increase the separation between the equipment and receiver.
- Connect the equipment into an outlet on a circuit different from that to which the receiver is connected.
- Consult the dealer or an experienced radio/TV technician for help.

NOTICE: This device complies with Part 15 of the FCC Rules. Operation is subject to the following two conditions: (1) this device may not cause harmful interference, and (2) this device must accept any interference received, including interference that may cause undesired operation.

Warranty

The manufacturer warrants this fixture to be free from defects in materials and workmanship for a period of three (3) years from date of purchase. This warranty applies only to the original consumer purchaser and only to products used in normal use and service. If this product is found to be defective, the manufacturer's only obligation, and your exclusive remedy, is the repair or replacement of the product at the manufacturer's discretion, provided that the product has not been damaged through misuse, abuse, accident, modifications, alteration, neglect, or mishandling. This warranty shall not apply to any product that is found to have been improperly installed, set-up, or used in any way not in accordance with the instructions supplied with the product. This warranty shall not apply to a failure of the product as a result of an accident, misuse, abuse, negligence, alteration, faulty installation, or any other failure not relating to faulty material or workmanship. This warranty shall not apply to the finish on any portion of the product, such as surface and/or weathering, as this is considered normal wear and tear.

Contact the Customer Service Team at 1-877-527-0313 or visit www.HomeDepot.com.

FCC responsible party name: HOME DEPOT
Address: 2455 PACES FERRY ROAD ATLANTA, GA 30339
Telephone number: 1-877-527-0313

Pre-Installation

PLANNING INSTALLATION

Inspect the product for damage. If any part appears damaged, do not install this product. Contact the Customer Service Team at 1-877-527-0313.

PACKAGE CONTENTS

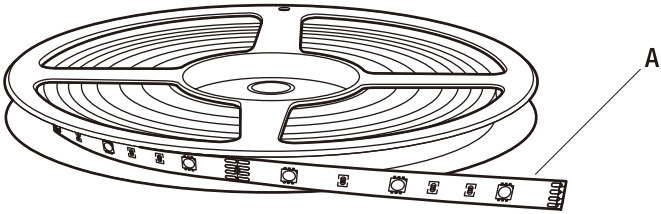

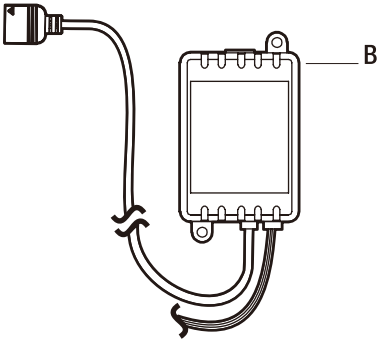

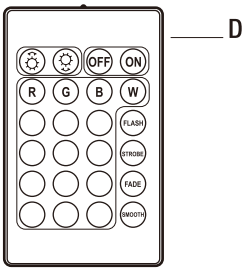

Part	Description	Quantity
A	Tape light	1
B	Control module	1
C	AC adapter	1
D	Remote control	1

Installation

1 Preparing the tape light

- (optional) Shorten the tape light (A) to the desired length by cutting along the black lines with the scissors mark.

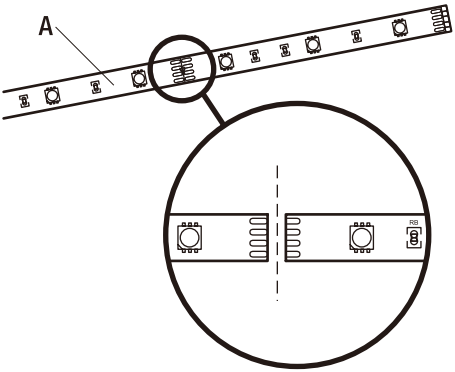

2 Installing the tape light

- Ensure the mounting location is even, clean, and dry.
- Remove the protective film from the back of the tape light (A).
- Press the tape light (A) to the mounting surface and hold in place for a few seconds.

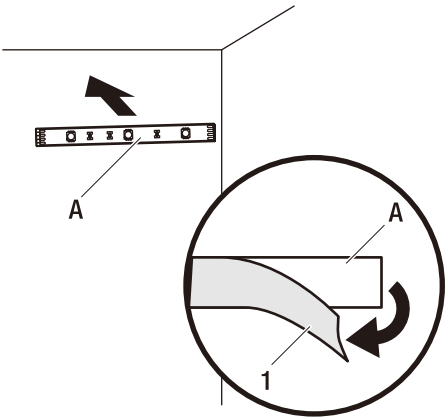

3 Installing the control module

- Install the control module (B) to the mounting surface using two screws (not included).
- Align the arrow on the control module (B) to the +12V mark on the tape light (A).
- Connect the control module (B) to the tape light (A).

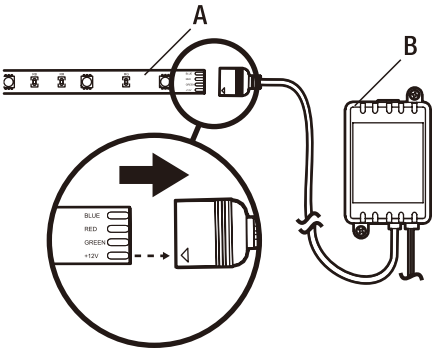

4 Connecting the power

- Connect the AC adapter (C) to the control module (B).
- Plug the AC adapter (C) into a wall receptacle.

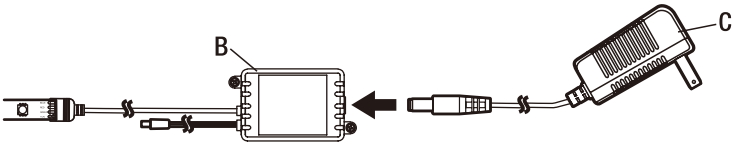

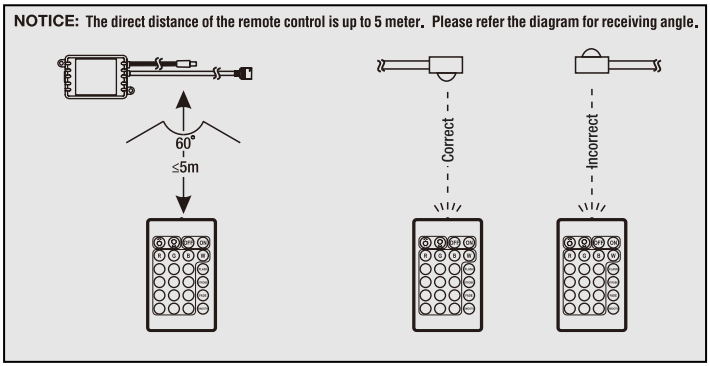

Remote Control Operation

Button	Description
ON	Switch on the tape light.
	◻ Increase the brightness in single color mode. ◻ Increase the speed in flash, strobe, fade, and smooth modes.
FLASH	Flash mode: each color flashes quickly.
STROBE	Strobe mode: the color changes every 3 seconds.
R G B W	Select from 16 colors, with adjustable brightness.

OFF	Switch off the tape light.
	◻ Decrease the brightness in single color mode. ◻ Decrease the speed in flash, strobe, fade, and smooth modes.
FADE	Fade mode: the color changes slowly.
SMOOTH	Smooth mode: the color changes slightly faster than in fade mode.

Care and Cleaning

Use a soft, dry cloth to clean the tape light. Do not use alcohol-based cleaners, as this may damage the acrylic surface.

Battery Safety

- ◻ Swallowing the batteries may lead to serious injury or death. If swallowed go straight to a medical emergency room.
- ◻ Clean batteries and the battery contacts before inserting if necessary with a clean, dry cloth.
- ◻ Always purchase the correct size and grade of batteries that are most suitable for the intended use.
- ◻ Remove batteries when they are not used for an extended period of time.
- ◻ Remove used batteries promptly.
- ◻ Keep batteries out of children's reach.
- ◻ Do not charge, dismantle, throw into fire, or short circuit the batteries.
- ◻ If a battery has leaked, avoid contact with skin, eyes, and mucous membranes. Promptly rinse any affected area with water and seek medical assistance.
- ◻ Do not mix old and new batteries.
- ◻ Always use the same type of batteries. Do not mix alkaline, standard (Carbon-Zinc), or rechargeable (Nickel Cadmium) or (Nickel Metal Hydride) batteries.

Commercial Electric™

Caution: The user is cautioned that changes or modifications not expressly approved by the party responsible for compliance could void the user's authority to operate the equipment.

This device complies with Part 15 of the FCC Rules. Operation is subject to the following two conditions: (1) this device may not cause harmful interference, and (2) this device must accept any interference received, including interference that may cause undesired operation.

NOTE: This equipment has been tested and found to comply with the limits for a Class B digital device, pursuant to Part 15 of the FCC Rules. These limits are designed to provide reasonable protection against harmful interference in a residential installation. This equipment generates, uses and can radiate radio frequency energy and, if not installed and used in accordance with the instructions, may cause harmful interference to radio communications. However, there is no guarantee that interference will not occur in a particular installation.
If this equipment does cause harmful interference to radio or television reception, which can be determined by turning the equipment off and on, the user is encouraged to try to correct the interference by one or more of the following measures:
-- Reorient or relocate the receiving antenna.
-- Increase the separation between the equipment and receiver.
-- Connect the equipment into an outlet on a circuit different from that to which the receiver is connected.
-- Consult the dealer or an experienced radio/TV technician for help.

FCC Radiation Exposure Statement
This equipment complies with FCC radiation exposure limits set forth for an uncontrolled environment.
This transmitter must not be co-located or operating in conjunction with any other antenna or transmitter.

Questions, problems, missing parts? Before returning to the store,
call Commercial Electric Customer Service
8 a.m. - 7 p.m., EST, Monday-Friday, 9 a.m. - 6 p.m., EST, Saturday

1-877-527-0313

HOMEDEPOT.COM

Retain this manual for future use.