XGEAR

SPINNING BIKE

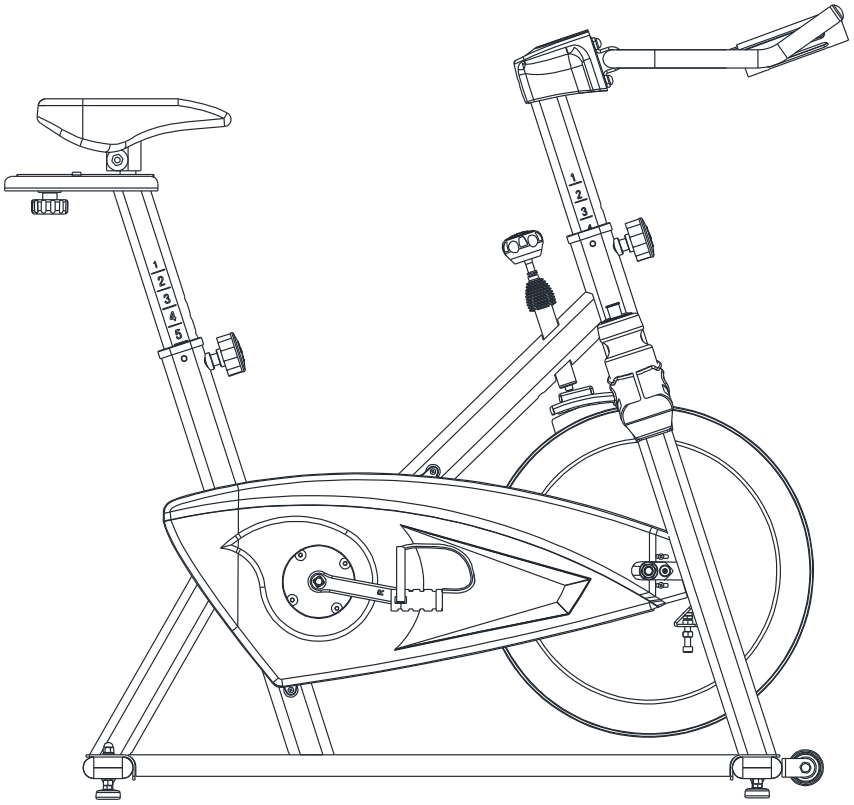

Dear Customer,

Please read this instruction very carefully before using this item. You will find important information regarding safety of your spinner bike.

IMPORTANT SAFETY NOTICE

Note the following precaution before assembling or operating the machine.

1、 Keep children and pets away from the Spinning Bike at all times. DO NOT leave unattended children in the same room with the machine.

2、 Handicapped or disabled persons should not use the Spinning Bike without the presence of a qualified health professional of a qualified health professional or physician.

3、 If the user experiences dizziness, nausea, chest pain, or any other abnormal symptoms, STOP the workout at once. CONSULT A PHYSICIAN IMMEDIATELY.

4、 Before beginning training, remove all within a radius of 2 meters from the machine. DO NOT place any sharp objects around the Spinning Bike.

5、 Position the Spinning Bike on a clear, level surface away from water and moisture. Place mat under the unit to help keep the machine stable and to protect flooring.

6、 Use the Spinning Bike only for its intended use as described in this manual. DO NOT use any other accessories not recommended by the manufacturer.

7、 Assemble the machine exactly as the descriptions in the instruction manual.

8、 Check all bolts and other connections before using the machine for the first time and ensure that the trainer is in the safe

condition.

9、 Hold a routine inspection of the equipment. Pay special attention to components which are the most susceptible to wear off, i.e. connecting points and wheels. The defective components should be replaced immediately. The safety level of this equipment can only be maintained by doing so. Please don't use the Spinning Bike until it is repaired well.

10、 NEVER operate the Spinning Bike if it is not functioning properly.

11、 This machine can be used for only one person’s training at a time.

12、 Do not use abrasive cleaning articles to clean the machine. Remove drops of sweat from the machine immediately after finishing training.

13、 Always wear appropriate workout clothing when exercising. Running or aerobic shoes are also required.

14、 Before exercising, always do stretching first.

15、 The power of the machine increases with increasing the speed, and the reverse. The machine is equipped with adjustable knob, which can adjust the resistance.

WARNING: BEFORE BEGINNING THIS OR ANY EXERCISE PROGRAM, CONSULT YOUR PHYSICIAN F I R S T. THIS IS ESPECIALLY IMPORTANT FOR INDIVIDUALS OVER THE AGE OF 35 OR PERSONS WITH PRE-EXISTING HEALTH PROBLEMS. READ ALL INSTRUCTIONS BEFORE USING THE SPINNING BIKE . THANE ASSUMES NO RESPONSIBILITY FOR PERSONAL INJURY OR PROPERTY DAMAGE SUSTA I N E D BY OR THROUGH THE USE OF THIS PRODUCT

EXPLODED-VIEW & PARTS LIST：

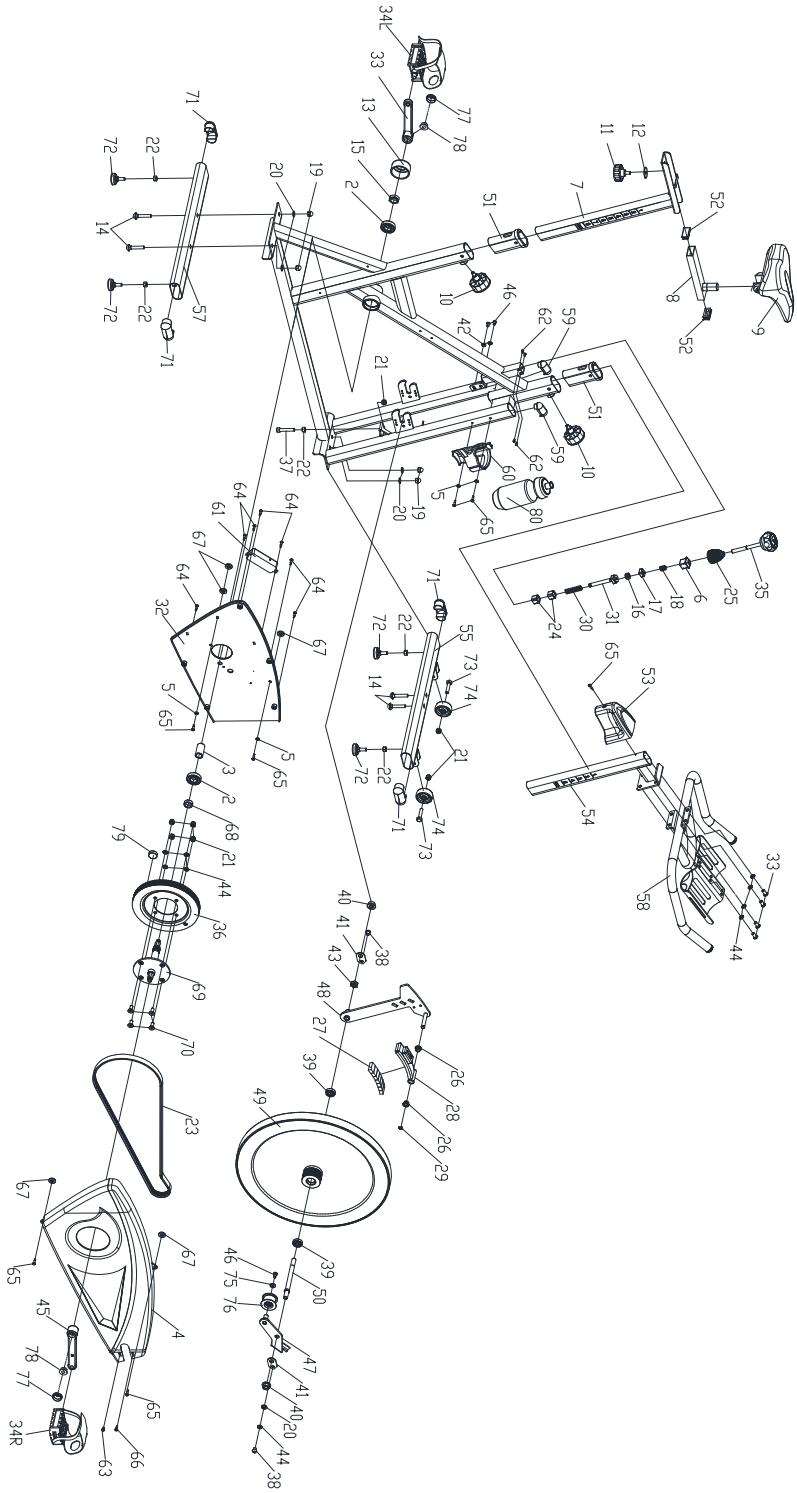

NO	NAME	SPEC	Q'TY	UNIT
1	MAIN FRAME	WELDMENT	1	PCS
2	BEARING 6004ZZ	6004ZZ	2	PCS
3	LONG FIXING TUBE	φ25*φ20.5*41.1	1	PCS
4	OUTER CHAIN COVER	738*320*52	1	PCS
5	WASHER 5	GB/T 95-2002 5	4	PCS
6	BRAKE FIXING TUBE	25*25*27	1	PCS
7	VERTICAL SEAT POST	WELDMENT	1	PCS
8	SEAT POST	WELDMENT	1	PCS
9	SEAT	AQ-6010	1	PCS
10	SPRING ADJUSTMENT KNOB	M16*1.5	2	PCS
11	LOCKING KNOB	M8x15	1	PCS
12	WASHER 2	Φ32*Φ8.2*2	1	PCS
13	CRANK COVER	φ56*28	1	PCS
14	CARRIAGE BOLT	GB/T 12-1988 M8*42	4	PCS
15	LOCKING NUT	φ28*M20*1	1	PCS
16	FIXING NUT M10	GB/T 889.1-2000 M10	1	PCS
17	SQUARE NUT	20*20*t8(M10)	1	PCS
18	SPRING	φ15.5*φ1.5X15	1	PCS
19	DOMED NUT	GB/T 802-1988 M8	4	PCS
20	FLAT WASHER	GB/T 95-2002 8	4	PCS
21	FIXING NUT M8	GB/T 889.1-2000 M8	7	PCS
22	NUT M8	GB/T 41-2000 M8	5	PCS
23	BELT	5PK1333mm	1	PCS
24	SQUARE SPACER	20.6*20.6*16	2	PCS
25	PASTIC COVER	φ40.6*60	1	PCS
26	AXLE SLEEVE	φ18*φ10*10	2	PCS
27	MAGNETIC	30*15*10	7	PCS
28	MAGNETIC FIXING HOLDER	WELDMENT	1	PCS
29	ELASTIC WASHER 10	GB894.1 Φ10	1	PCS
30	SPRING	Φ2.0*52	1	PCS
31	BRAKE POLE	WELDMENT	1	PCS
32	INNER CHAIN COVER	515*296*2.5	1	PCS
33	LEFT CRANK	170*27	1	PCS
34	PEDAL	JD-301（9/16"）	1	SET
35	BRAKE KNOB	M10*100（牙长50）	1	PCS
36	BELT PULLEY	φ200*24	1	PCS
37	BOLT M8*45	GB/T 70.1-2000 M8*45	1	PCS
38	BOLT M8*10	GB/T 70.2-2000 M8*10	2	PCS
39	BEARING 6001ZZ	6001ZZ	2	PCS
40	NUT M12X1.25	M12X1.25	2	PCS

NO	NAME	SPEC	Q'TY	UNIT
41	FLYWHEEL FIXING TUBE	δ2.5	2	PCS
42	FLAT WASHER 6	GB/T 95-2002 6	2	PCS
43	THIN NUT	M12X1.25 H=7	1	PCS
44	ELASTIC WASHER 8	GB/T 859-1987 8	9	PCS
45	RIGHT CRANK	170*27	1	PCS
46	BOLT M6*10	GB/T 70.1-2000 M6*10	3	PCS
47	BELT BOARD ASSEMBLY	WELDMENT	1	PCS
48	MAGNETIC HOLDER	WELDMENT	1	PCS
49	FLYWHEEL	φ463*71	1	PCS
50	FLYWHEEL SHAFT	φ16*φ12*156	1	PCS
51	PLASTIC SLEEVE	50*25*1.5	2	PCS
52	END CAP 40*20	40*20*1.5	2	PCS
53	HANDLEBAR COVER	115*89*75	1	PCS
54	HANDLEBAR POST	WELDMENT	1	PCS
55	FRONT STABILIZER	WELDMENT	1	PCS
56	BOLT M8*15	GB/T 70.2-2000 M8*15	4	PCS
57	REAR STABILIZER	WELDMENT	1	PCS
58	HANDLE BAR	WELDMENT	1	PCS
59	END CAP 50*25	50*25*1.5	2	PCS
60	BOTTLE HOLDER	117*85*90	1	PCS
61	BLUETOOTH BOX	111*33*23	1	PCS
62	SCREW ST2.9X9.5	ST2.9*9.5	4	PCS
63	SCREW ST4.2X9.5	GB/845-85 ST4.2X9.5	1	PCS
64	SCREW ST4.2X19	GB/T 845-1985 ST4.2*19	7	PCS
65	SCREW ST4.2X19 8	GB/T 15856.1-2002 ST4.2X19	7	PCS
66	SCREW ST4.2X13	GB/T 15856.1-2002 ST4.2X13	1	PCS
67	SPACER	φ20*φ10.1*3	5	PCS
68	CRANK TUBE	φ25*20.05*9	1	PCS
69	AXIS	φ20*168	1	PCS
70	BOLT M8*18	GB/T 70.3-2000 M8*18	4	PCS
71	END CAP	70*30*1.5	4	PCS
72	STOPPER	φ38*43/(M8X25)	4	PCS
73	BOLT M8*40	GB/T 5780-2000 M8*40	2	PCS
74	WHEEL	PA6	2	PCS
75	FLAT WASHER 10	6	1	PCS
76	PLASTIC BELT BOARD	Φ43*Φ34*24	1	PCS
77	CRANK END CAP	φ23*7.5	2	PCS
78	NUT M10X1.25	GB/T 6177.2-2000 M10*1.25	2	PCS
79	LITTLE MAGNETIC	C-02Z	1	PCS
80	WATERBOTTLE	XS-003	1	PCS

ASSEMBLY INSTRUCTION:

1.PREPARATION:

A. Before assembling make sure that you will have enough space around the item.
B. Use the present tooling for assembling.
C. Before assembling please check whether all needed parts are available (at the above of this instruction sheet you will find an explosion drawing with all single parts (marked with numbers) which this item consists of.

2.ASSEMBLY INSTRUCTION:

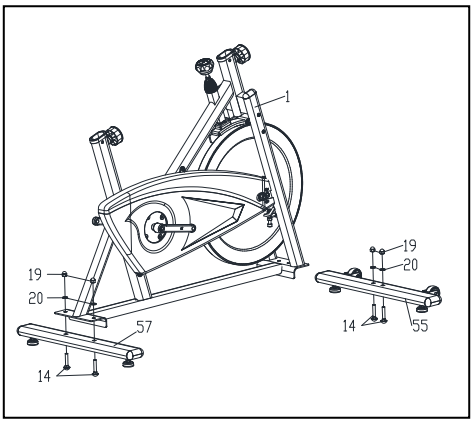

FIG.1

FIG.1:
Attach the Front Stabilizer (pt.55) to the Main Frame (pt.01) using two sets of Ø8 Flat Washers (pt.20), M8 Domed Nut (pt.19) and M8*42 Carriage bolt (pt.14). Attach the Rear Stabilizer (pt.57) to the Main Frame (pt.01) using two sets of Ø8 Flat Washers (pt.20), M8 Domed Nut (pt.19) and M8*42 Carriage bolt (pt.14).

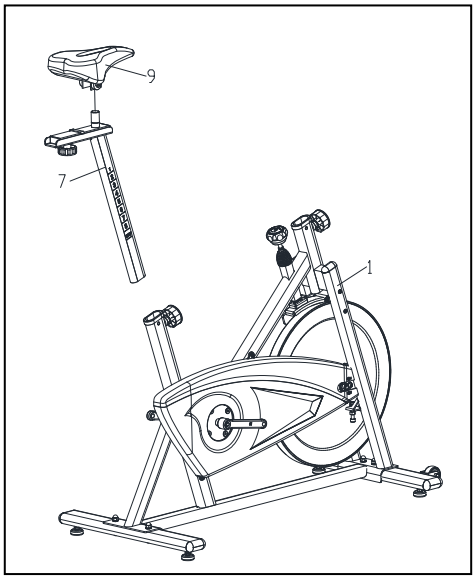

FIG.2

FIG.2:

Slide the Vertical Seat Post (pt.07) into the seat post housing on the Main Frame (pt.01). You will have to slacken the knurled section of the Knob and pull the knob back and then select the desired height. Release the knob and retighten the knurled portion.

Finally,the Seat (pt.09) fixed on the Seat Post as shown, and tighten the nuts under the seat.

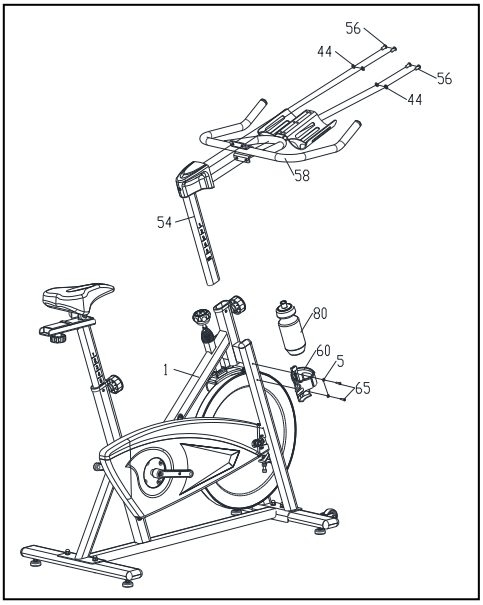

FIG.3

FIG.3:

Slide the Handlebar Post (pt.54) into the handlebar post housing on the main frame. You will have to slacken the knurled section of the Spring Adjustment Knob and pull the knob back and then select and align holes for the desired height. Release the knob and retighten the knurled portion.

Then fix the Handlebar (pt.58) with four pcs of Ø8 the Spring Washer (pt.44) and M8*15 the Bolt (pt.56).

ATTENTION: YOU SHOULD FIX THE HANDLEBAR TIGHTLY

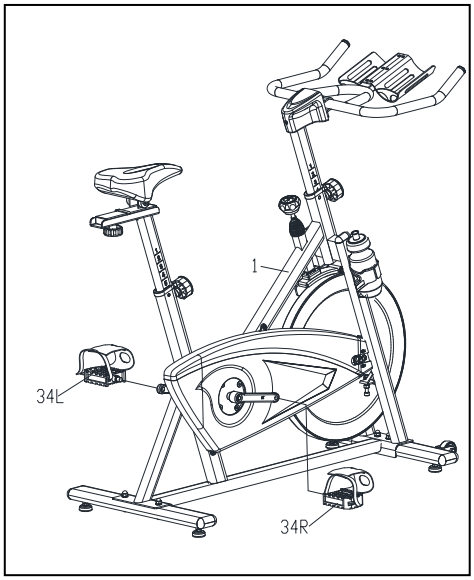

FIG.4

FIG.4:

The Pedals (pt.34 L & pt.34 R) are marked "L" and "R" - Left and Right.

Connect them to their appropriate crank arms. The right crank arm is on the right- hand side of the cycle as you sit on it.

Note that the Right pedal should be threaded on clockwise and the Left pedal anticlockwise.

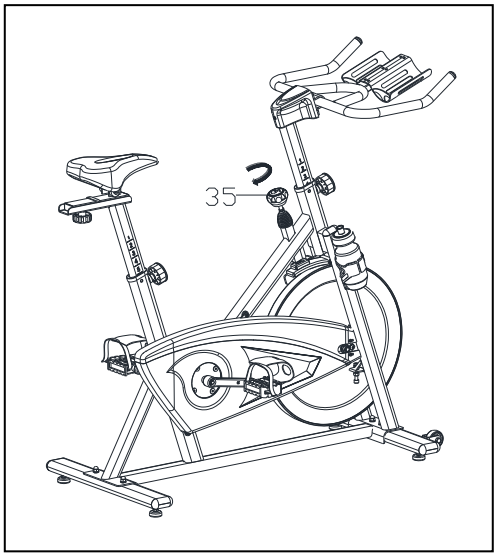

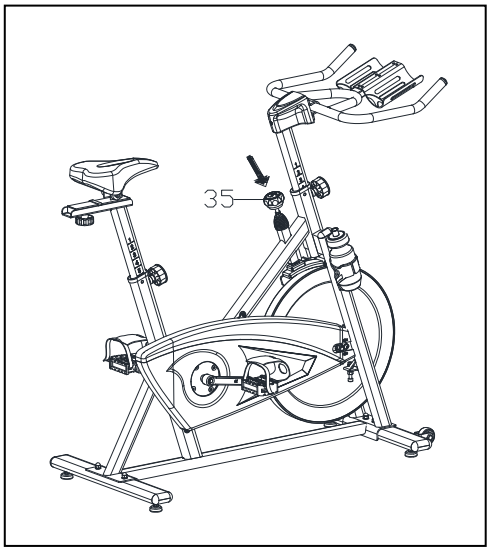

A.) Adjusting the Tension:
Increasing or decreasing the tension allows you to add variety to your workout sessions by adjusting the resistance level of the bike.
To increase tension and increase resistance (requiring more strength to pedal), turn the *Emergency Brake & Tension Control Knob (#35)* to the *right*.
To decrease tension and increase resistance (requiring less strength to pedla), turn the *Emergency Brake & Tension Control Knob (#35)* to the *left*.B.) Using the Emergency Brake Function:

The same knob that allows you to adjust the tension of the bike also doubles as the Emergency Brake. Use this safety feature in any situation where you would need to get off the bike and/or stop the bike's flywheel.
To use the Emergency Brake function in any situation you would need it in, firmly press down on the *Emergency Brake & Brake Control Knob (#35)*.

ADJUSTMENT

***To adjust the seat height, slacken the spring knob on the vertical post stem on the main frame and pull back the knob. Position the vertical seat post for the desired height so that holes are aligned, then release the knob and retighten it.**

***To move the seat forward in the direction of the handlebar or backwards away from it, loosen the adjusting knob and washer and pull the knob back. Slide horizontal seat post into desired position. Align holes and then retighten the adjusting knob.**

***To adjust the handlebar height, slacken the spring knob and pull the knob back. Slide the handlebar post along the housing on the main frame to the desired height and, with the holes aligned correctly, tighten the spring adjusting knob.**

EXERCISE INSTRUCTIONS

Using your **SPINNING BIKE** provides you with several benefits, it will improve your physical fitness, tone muscle and in conjunction with calorie controlled diet help you lose weight.

1.The Warm Up Phase

This stage helps get the blood flowing around the body and the muscles working properly. It will also reduce the risk of cramp and muscle injury. It is advisable to do a few stretching exercises as shown below. Each stretch should be held for approximately 30 seconds, do not force or jerk your muscles into a stretch - if it hurts, **STOP.**

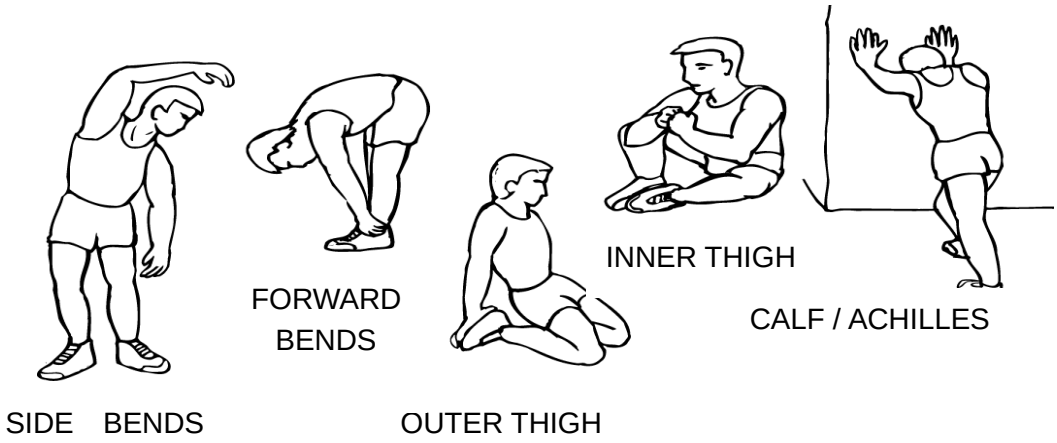

2.The Exercise Phase

This is the stage where you put the effort in. After regular use , the muscles in your legs will become Stronger. Work to your but it is very important to maintain a steady tempo throughout. The rate of work should be sufficient to raise your heart beat into the target zone shown on the graph below.

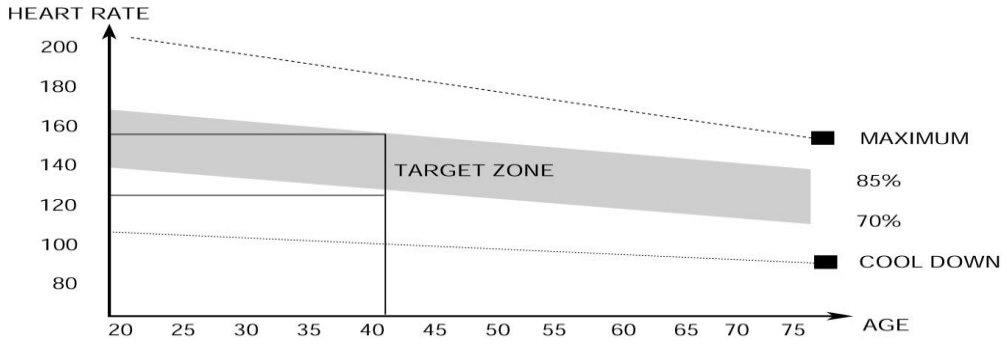

This stage should last for a minimum of 12 minutes for most people

start at about 15-20 minutes

This stage is to let your Cardio-vascular System and muscles wind down. This is a repeat of the warm up exercise e.g. reduce your tempo, continue for approximately 5 minutes. The stretching exercises should now be repeated, again remembering not to force or jerk your muscles into the stretch.
As you get fitter you may need to train longer and harder. It is advisable to train at least three times a week, and if possible space your workouts evenly throughout the week.

MUSCLE TONING

To tone muscle while on your **SPINNING BIKE** you will need to have the resistance set quite high. This will put more strain on our leg muscles and may mean you cannot train for as long as you would like. If you are also trying to improve your fitness you need to alter your training program. You should train as normal during the warm up and cool down phases, but towards the end of the exercise phase you should increase resistance, making your legs work harden than normal. You may have to reduce your speed to keep your heart rate in the target zone.

WEIGHT LOSS

The important factor here is the amount of effort you put in. The harder and longer you work the more calories you will burn. Effectively this is the same as if you were training to improve your fitness, the difference is the goal.

USE

The tension control knob allows you to alter the resistance of the pedals. A high resistance makes it more difficult to pedal, a low resistance makes it easier. For the best results set the tension while the bike is in use.

Caution:

The user is cautioned that changes or modifications not expressly approved by the party responsible for compliance could void the user's authority to operate the equipment.

This device complies with Part 15 of the FCC Rules. Operation is subject to the following two conditions: (1) this device may not cause harmful interference, and (2) this device must accept any interference received, including interference that may cause undesired operation.

NOTE: This equipment has been tested and found to comply with the limits for a Class B digital device, pursuant to Part 15 of the FCC Rules. These limits are designed to provide reasonable protection against harmful interference in a residential installation. This equipment generates, uses and can radiate radio frequency energy and, if not installed and used in accordance with the instructions, may cause harmful interference to radio communications. However, there is no guarantee that interference will not occur in a particular installation.
If this equipment does cause harmful interference to radio or television reception, which can be determined by turning the equipment off and on, the user is encouraged to try to correct the interference by one or more of the following measures:
-- Reorient or relocate the receiving antenna.
-- Increase the separation between the equipment and receiver.
-- Connect the equipment into an outlet on a circuit different from that to which the receiver is connected.
-- Consult the dealer or an experienced radio/TV technician for help.

FCC Radiation Exposure Statement

This equipment complies with FCC radiation exposure limits set forth for an uncontrolled environment. This transmitter must not be co-located or operating in conjunction with any other antenna or transmitter.