FCC TEST REPORT

Test report
On Behalf of
Shenzhen uvision Technology Co., Ltd.
For
Wireless projection screen collaboration system
Model No.: RS13-RBP01

FCC ID: 2AWC8-RS13RBP01

Prepared for :	**Shenzhen uvision Technology Co., Ltd.** **Room 410, building 3, liuxian culture park, no.1002 xili tongle road, nanshan district, shenzhen, China**
Prepared By :	**Shenzhen HUAK Testing Technology Co., Ltd.** **1F, B2 Building, Junfeng Zhongcheng Zhizao Innovation Park, Fuhai Street, Bao'an District, Shenzhen City, China**

Date of Test:	**Apr. 02, 2020 ~Apr. 09, 2020**
Date of Report:	**Apr. 09, 2020**
Report Number:	**HK2003030561-2E**

TEST RESULT CERTIFICATION

Applicant's name.....:	Shenzhen uvision Technology Co., Ltd.
Address .....:	Room 410, building 3, liuxian culture park, no.1002 xili tongle road, nanshan district, shenzhen, China
Manufacture's Name.....:	Shenzhen uvision Technology Co., Ltd.
Address .....:	Room 410, building 3, liuxian culture park, no.1002 xili tongle road, nanshan district, shenzhen, China

Product description

Trade Mark:	N/A
Product name.....:	Wireless projection screen collaboration system
Model and/or type reference .:	**RS13-RBP01**
Standards .....:	FCC Rules and Regulations Part 15 Subpart C Section 15.407 ANSI C63.10: 2013

This publication may be reproduced in whole or in part for non-commercial purposes as long as the Shenzhen HUAK Testing Technology Co., Ltd. is acknowledged as copyright owner and source of the material. Shenzhen HUAK Testing Technology Co., Ltd. takes no responsibility for and will not assume liability for damages resulting from the reader's interpretation of the reproduced material due to its placement and context.

Date of Test .....:

Date (s) of performance of tests .....:	Apr. 02, 2020 ~Apr. 09, 2020
Date of Issue.....:	Apr. 09, 2020
Test Result.....:	Pass

Testing Engineer : Gary Qian

(Gary Qian)

Technical Manager : Eden Hu

(Eden Hu)

Authorized Signatory : Jason Zhou

(Jason Zhou)

TABLE OF CONTENTS

1. Test Result Summary 5
   1.1. TEST PROCEDURES AND RESULTS 5
   1.2. TEST FACILITY 5
   1.3. MEASUREMENT UNCERTAINTY 6
2. EUT Description 7
   2.1. GENERAL DESCRIPTION OF EUT 7
   2.2. OPERATION FREQUENCY EACH OF CHANNEL 8
   2.3. OPERATION OF EUT DURING TESTING 8
   2.4. DESCRIPTION OF TEST SETUP 9
3. Genera Information 10
   3.1. TEST ENVIRONMENT AND MODE 10
   3.2. DESCRIPTION OF SUPPORT UNITS 11
4. Test Results and Measurement Data 12
   4.1. CONDUCTED EMISSION 12
   4.2. MAXIMUM CONDUCTED OUTPUT POWER 16
   4.3. 6DB EMISSION BANDWIDTH 18
   4.4. 26DB BANDWIDTH AND 99% OCCUPIED BANDWIDTH 25
   4.5. POWER SPECTRAL DENSITY 26
   4.6. BAND EDGE 33
   4.7. SPURIOUS EMISSION 48
   4.8. FREQUENCY STABILITY MEASUREMENT 57
   4.9. ANTENNA REQUIREMENT 59
   4.10. PHOTOGRAPHS OF TEST SETUP 60
   4.11. PHOTOS OF THE EUT 62

** Modifited History **

Revison	Description	Issued Data	Remark
Revsion 1.0	Initial Test Report Release	**Apr. 09, 2020**	Jason Zhou

1. Test Result Summary

1.1. TEST PROCEDURES AND RESULTS

Requirement	CFR 47 Section	Result
Antenna requirement	§15.203	PASS
AC Power Line Conducted Emission	§15.207	PASS
Maximum Conducted Output Power	§15.407(a)	PASS
6dB Emission Bandwidth	§15.407(e)	PASS
26dB Emission Bandwidth& 99% Occupied Bandwidth	§15.407(a)	N/A
Power Spectral Density	§15.407(a)	PASS
Band edge	§15.407(b)/15.209/15.205	PASS
Radiated Emission	§15.407(b)/15.209/15.205	PASS
Frequency Stability	§15.407(g)	PASS

Note:

1. PASS: Test item meets the requirement.

2. Fail: Test item does not meet the requirement.

3. N/A: Test case does not apply to the test object.

4. The test result judgment is decided by the limit of test standard.

1.2. TEST FACILITY

Test Firm : Shenzhen HUAK Testing Technology Co., Ltd.

Address 1F, B2 Building, Junfeng Zhongcheng Zhizao Innovation Park, Fuhai Street, Bao'an District, Shenzhen City, China

1.3. Measurement Uncertainty

The reported uncertainty of measurement y ± U, where expended uncertainty U is based on a standard uncertainty multiplied by a coverage factor of k=2, providing a level of confidence of approximately 95 %.

No.	Item	MU
1	Conducted Emission	±2.56dB
2	RF power, conducted	±0.12dB
3	Spurious emissions, conducted	±0.11dB
4	All emissions, radiated(<1G)	±3.92dB
5	All emissions, radiated(>1G)	±4.28dB
6	Temperature	±0.1°C
7	Humidity	±1.0%

2. EUT Description

2.1. GENERAL DESCRIPTION OF EUT

Equipment	Wireless projection screen collaboration system
Model Name	**RS13-RBP01**
Serial No.	N/A
Trade Mark	N/A
Model Difference	N/A
FCC ID	2AWC8-RS13RBP01
Operation Frequency:	IEEE 802.11a/n/ac(HT20)5.745GHz-5.825GHz IEEE 802.11n/ac(HT40)5.755GHz-5.795GHz IEEE 802.11ac(HT80) 5.775GHz
Modulation Technology:	IEEE 802.11a/n/ac
Modulation Type	OFDM
Antenna Type	Internal Antenna
Antenna Gain	3dBi
Power Source	DC 5V, 2.5A from AC Adapter with AC100-240V~50-60Hz, 0.4A
Power Supply:	DC 5V, 2.5A from AC Adapter with AC100-240V~50-60Hz, 0.4A

2.2. Operation Frequency each of channel

802.11a/802.11n(HT20) 802.11ac(HT20)		802.11n(HT40)/ 802.11ac(HT40)		802.11ac(HT80)	
Channel	Frequency	Channel	Frequency	Channel	Frequency
149	5745	151	5755	155	5775
153	5765	159	5790		
157	5785				
161	5805				
165	5825				

Note:

In section 15.31(m), regards to the operating frequency range over 10 MHz, the Lowest frequency, the middle frequency, and the highest frequency of channel were selected to perform the test, and the selected channel see below:

2.3. Operation of EUT during testing

Band IV (5725 - 5850 MHz)		
For 802.11a/ n HT20/ac HT 20		
Channel Number	Channel	Frequency (MHz）
149	Low	5745
157	Mid	5785
165	High	5825
For 802.11n HT40/ac HT 40		
Channel Number	Channel	Frequency (MHz）
151	Low	5755
159	High	5795
For 802.11n HT40/ac HT 40		
Channel Number	Channel	Frequency (MHz）
155	-	5775

2.4. DESCRIPTION OF TEST SETUP

Operation of EUT during Conducted, Radiation testing:

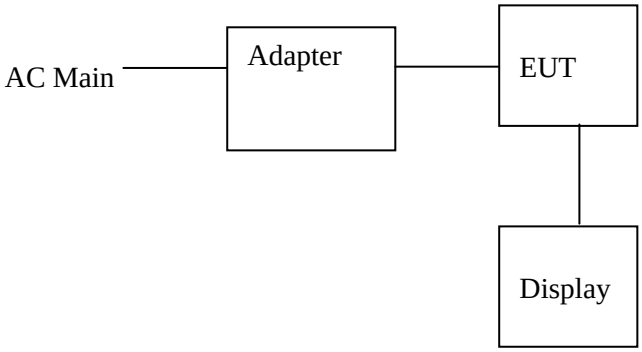

Operation of EUT during Above1GHz Radiation testing:

- Adapter information
  Model: A122-0502500UC
  Input: 100-240V~ 50/60Hz, 0.4A
  Output: 5V, 2500mA

- Display information
  Model: SE2417HG
  Input: 100-240V, 50/60Hz, 1.6A

3. Genera Information

3.1. Test environment and mode

Operating Environment:	
Temperature:	25.0 °C
Humidity:	56 % RH
Atmospheric Pressure:	1010 mbar
Test Mode:	
Engineering mode:	Keep the EUT in continuous transmitting by select channel and modulations(The value of duty cycle is 100%)
The sample was placed 0.8m/1.5m for blow/above 1GHz above the ground plane of 3m chamber. Measurements in both horizontal and vertical polarities were performed. During the test, each emission was maximized by: having the EUT continuously working, investigated all operating modes, rotated about all 3 axis (X, Y & Z) and considered typical configuration to obtain worst position, manipulating interconnecting cables, rotating the turntable, varying antenna height from 1m to 4m in both horizontal and vertical polarizations. The emissions worst-case are shown in Test Results of the following pages.	

We have verified the construction and function in typical operation. All the test modes were carried out with the EUT in transmitting operation, which was shown in this test report and defined as follows:	
Per-scan all kind of data rate in lowest channel, and found the follow list which it was worst case.	
Mode	Data rate
802.11a	6 Mbps
802.11n(HT20)	MCS0
802.11n(HT40)	MCS0
802.11ac(HT20)/ac(HT40)/ac(HT80)	MCS0
Final Test Mode:	
Operation mode:	Keep the EUT in continuous transmitting with modulation

3.2. Description of Support Units

The EUT has been tested as an independent unit together with other necessary accessories or support units. The following support units or accessories were used to form a representative test configuration during the tests.

Equipment	Model No.	Serial No.	FCC ID	Trade Name
/	/	/	/	/

Note:

1. All the equipment/cables were placed in the worst-case configuration to maximize the emission during the test.

2. Grounding was established in accordance with the manufacturer's requirements and conditions for the intended use.

3. For conducted measurements (Output Power, Emission Bandwidth, Power Spectral Density, Spurious Emissions), the antenna of EUT is connected to the test equipment via temporary antenna connector, the antenna connector is soldered on the antenna port of EUT, and the temporary antenna connector is listed in the Test Instruments.

4. Test Results and Measurement Data

4.1. Conducted Emission

4.1.1. Test Specification

<table>
<tr><td>Test Requirement:</td><td>FCC Part15 C Section 15.207</td></tr>
<tr><td>Test Method:</td><td>ANSI C63.10:2013</td></tr>
<tr><td>Frequency Range:</td><td>150 kHz to 30 MHz</td></tr>
<tr><td>Receiver setup:</td><td>RBW=9 kHz, VBW=30 kHz, Sweep time=auto</td></tr>
<tr><td>Limits:</td><td>
<table>
<tr><td rowspan="2">Frequency range (MHz)</td><td colspan="2">Limit (dBuV)</td></tr>
<tr><td>Quasi-peak</td><td>Average</td></tr>
<tr><td>0.15-0.5</td><td>66 to 56*</td><td>56 to 46*</td></tr>
<tr><td>0.5-5</td><td>56</td><td>46</td></tr>
<tr><td>5-30</td><td>60</td><td>50</td></tr>
</table>
</td></tr>
<tr><td>Test Setup:</td><td>
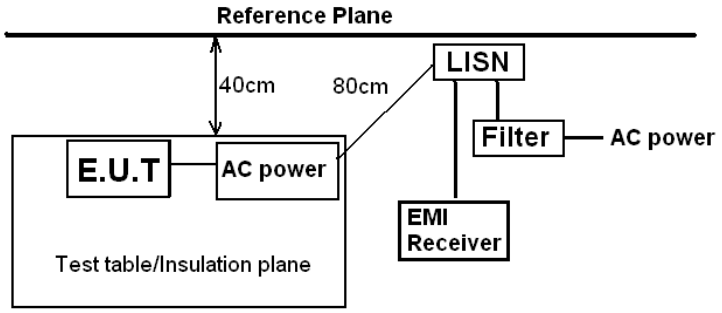

Remark:
E.U.T: Equipment Under Test
LISN: Line Impedence Stabilization Network
Test table height=0.8m
</td></tr>
<tr><td>Test Mode:</td><td>Tx Mode</td></tr>
<tr><td>Test Procedure:</td><td>1. The E.U.T and simulators are connected to the main power through a line impedance stabilization network (L.I.S.N.). This provides a 50ohm/50uH coupling impedance for the measuring equipment.
2. The peripheral devices are also connected to the main power through a LISN that provides a 50ohm/50uH coupling impedance with 50ohm termination. (Please refer to the block diagram of the test setup and photographs).
3. Both sides of A.C. line are checked for maximum conducted interference. In order to find the maximum emission, the relative positions of equipment and all of the interface cables must be changed according to ANSI C63.10: 2013 on conducted measurement.</td></tr>
<tr><td>Test Result:</td><td>PASS</td></tr>
</table>

4.1.2. Test Instruments

Conducted Emission Shielding Room Test Site (843)					
Equipment	**Manufacturer**	**Model**	**Serial Number**	**Calibration Date**	**Calibration Due**
Receiver	R&S	ESCI 7	HKE-010	Dec. 26, 2019	Dec. 25, 2020
LISN	R&S	ENV216	HKE-002	Dec. 26, 2019	Dec. 25, 2020
Coax cable (9KHz-30MHz)	Times	381806-002	N/A	Dec. 26, 2019	Dec. 25, 2020
Conducted test software	Tonscend	TS+ Rev 2.5.0.0	HKE-081	N/A	N/A

Note: *The calibration interval of the above test instruments is 12 months and the calibrations are traceable to international system unit (SI).*

TEST RESULTS

PASS

All the test modes completed for test. only the worst result of AC240V/60Hz(802.11a at 5745MHz) was reported as below:

Conducted Emission on Line Terminal of the power line (150 kHz to 30MHz)

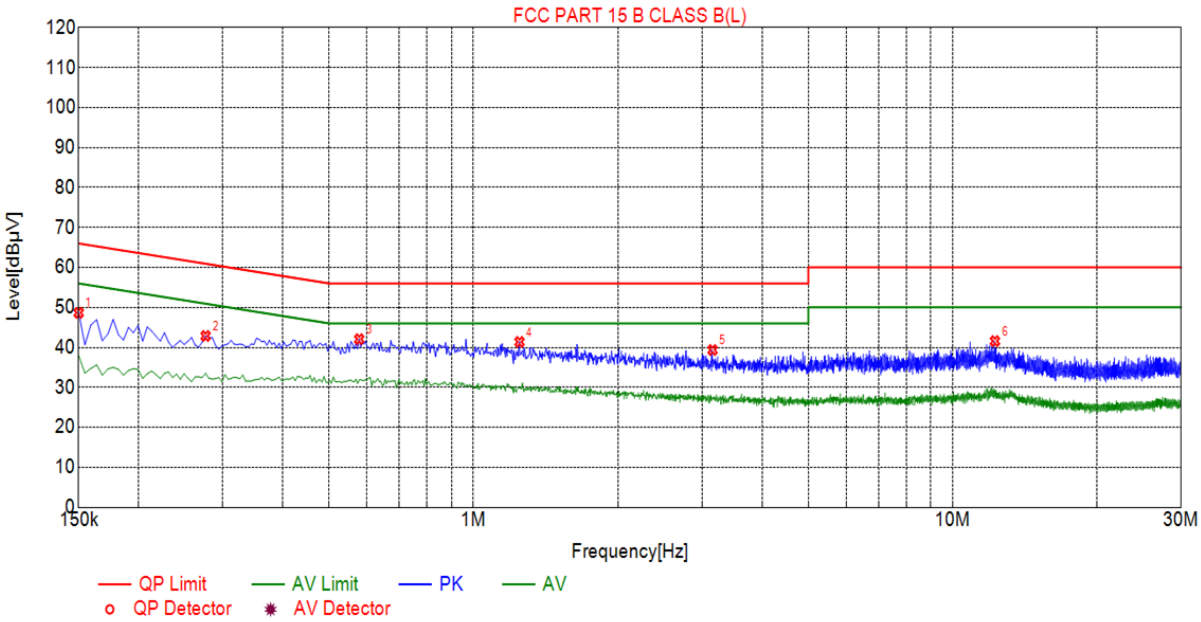

Suspected List								
NO.	Freq. [MHz]	Level [dBµV]	Factor [dB]	Limit [dBµV]	Margin [dB]	Reading [dBµV]	Detector	Type
1	0.1500	48.66	10.03	66.00	17.34	38.63	PK	L
2	0.2760	42.86	10.04	60.94	18.08	32.82	PK	L
3	0.5775	42.06	10.05	56.00	13.94	32.01	PK	L
4	1.2480	41.37	10.09	56.00	14.63	31.28	PK	L
5	3.1560	39.35	10.23	56.00	16.65	29.12	PK	L
6	12.2595	41.58	9.98	60.00	18.42	31.60	PK	L

Remark: Margin = Limit – Level
Correction factor = Cable lose + LISN insertion loss
Level=Test receiver reading + correction factor

Conducted Emission on Neutral Terminal of the power line (150 kHz to 30MHz)

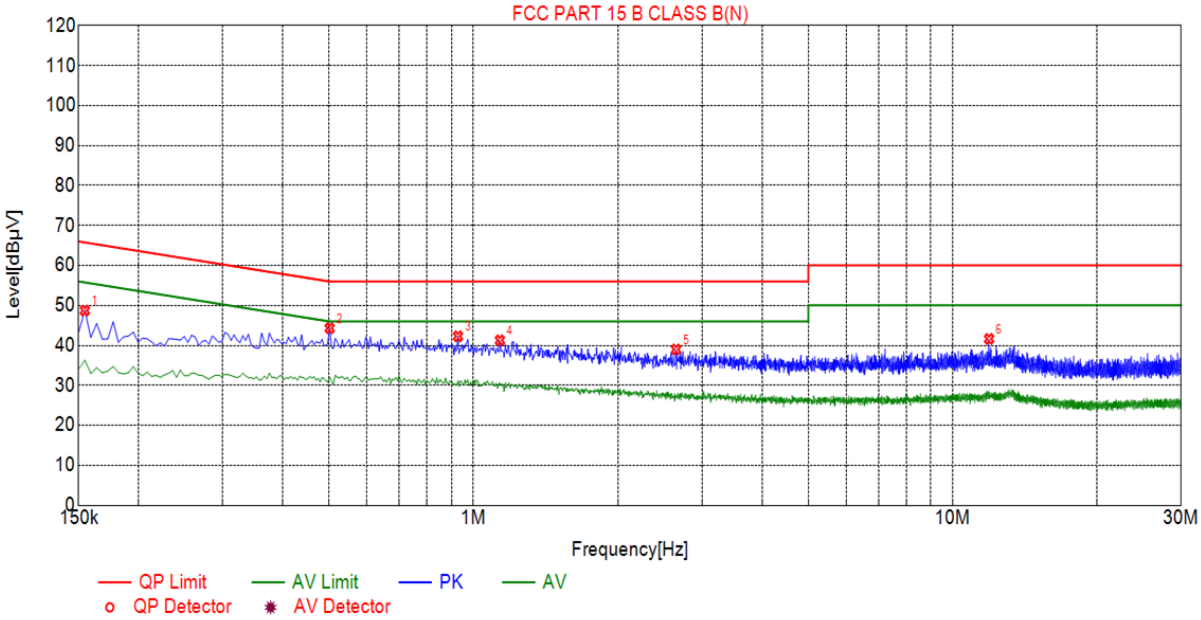

Suspected List								
NO.	Freq. [MHz]	Level [dBµV]	Factor [dB]	Limit [dBµV]	Margin [dB]	Reading [dBµV]	Detector	Type
1	0.1545	48.72	10.03	65.75	17.03	38.69	PK	N
2	0.5010	44.31	10.04	56.00	11.69	34.27	PK	N
3	0.9285	42.29	10.06	56.00	13.71	32.23	PK	N
4	1.1355	41.28	10.09	56.00	14.72	31.19	PK	N
5	2.6475	39.00	10.21	56.00	17.00	28.79	PK	N
6	11.9175	41.62	9.99	60.00	18.38	31.63	PK	N

Remark: Margin = Limit – Level
Correction factor = Cable lose + LISN insertion loss
Level=Test receiver reading + correction factor

4.2. Maximum Conducted Output Power

4.2.1. Test Specification

Test Requirement:	FCC Part15 E Section 15.407(a)
Test Method:	KDB789033 D02 General UNII Test Procedures New Rules v02.r01 Section E
Limit:	Frequency Band (MHz): Limit 5725-5850: 1 W
Test Setup:	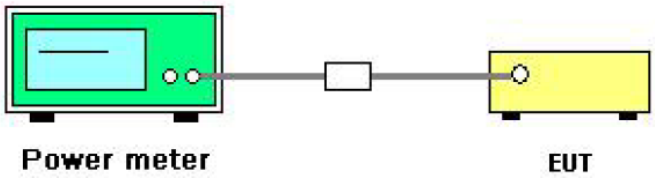
Test Mode:	Transmitting mode with modulation
Test Procedure:	1. The testing follows the Measurement Procedure of KDB789033 D02 General UNII Test Procedures New Rules v02r01 Section E, 3, a 2. The RF output of EUT was connected to the power meter by RF cable and attenuator. The path loss was compensated to the results for each measurement. 3. Set to the maximum power setting and enable the EUT transmit continuously. 5. Measure the conducted output power and record the results in the test report.
Test Result:	PASS
Remark:	Conducted output power= measurement power +10log(1/x) X is duty cycle=1, so 10log(1/1)=0 Conducted output power= measurement power
Note: The test double antenna is simultaneously transmitted, and the transmitting module is the same.	

4.2.2. Test Instruments

RF Test Room					
Equipment	**Manufacturer**	**Model**	**Serial Number**	**Calibration Date**	**Calibration Due**
Spectrum analyzer	Agilent	N9020A	HKE-048	Dec. 26, 2019	Dec. 25, 2020
Power meter	Agilent	E4419B	HKE-085	Dec. 26, 2019	Dec. 25, 2020
Power Sensor	Agilent	E9300A	HKE-086	Dec. 26, 2019	Dec. 25, 2020
RF cable	Times	1-40G	HKE-034	Dec. 26, 2019	Dec. 25, 2020
RF automatic control unit	Tonscend	JS0806-2	HKE-060	Dec. 26, 2019	Dec. 25, 2020

Note: *The calibration interval of the above test instruments is 12 months and the calibrations are traceable to international system unit (SI).*

Test Data

Configuration Band IV (5725 - 5850 MHz)				
Mode	Test channel	Maximum Conducted Output Power (dBm)	FCC Limit (dBm)	Result
11a	CH149	18.57	30	PASS
11a	CH157	18.25	30	PASS
11a	CH165	18.22	30	PASS
11n HT20	CH149	18.10	30	PASS
11n HT20	CH157	17.81	30	PASS
11n HT20	CH165	17.90	30	PASS
11n HT40	CH151	18.23	30	PASS
11n HT40	CH159	18.01	30	PASS
11ac HT20	CH149	17.95	30	PASS
11ac HT20	CH157	17.87	30	PASS
11ac HT20	CH165	17.89	30	PASS
11ac HT40	CH151	18.19	30	PASS
11ac HT40	CH159	18.02	30	PASS
11ac HT80	CH155	18.40	30	PASS

4.3. 6dB Emission Bandwidth

4.3.1. Test Specification

Test Requirement:	FCC CFR47 Part 15 Section 15.407(e)
Test Method:	KDB789033 D02 General UNII Test Procedures New Rules v02r01 Section C
Limit:	>500kHz
Test Setup:	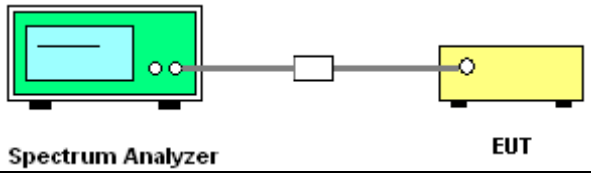
Test Mode:	Transmitting mode with modulation
Test Procedure:	1. KDB789033 D02 General UNII Test Procedures New Rules v02r01 Section C 2. Set to the maximum power setting and enable the EUT transmit continuously. 3. Make the measurement with the spectrum analyzer's resolution bandwidth (RBW) = 100 kHz. Set the Video bandwidth (VBW) = 300 kHz. In order to make an accurate measurement. The 6dB bandwidth must be greater than 500 kHz. 4. Measure and record the results in the test report.
Test Result:	PASS

4.3.2. Test Instruments

RF Test Room					
Equipment	**Manufacturer**	**Model**	**Serial Number**	**Calibration Date**	**Calibration Due**
Spectrum analyzer	Agilent	N9020A	HKE-048	Dec. 26, 2019	Dec. 25, 2020
RF cable	Times	1-40G	HKE-034	Dec. 26, 2019	Dec. 25, 2020
RF automatic control unit	Tonscend	JS0806-2	HKE-060	Dec. 26, 2019	Dec. 25, 2020

Note: *The calibration interval of the above test instruments is 12 months and the calibrations are traceable to international system unit (SI).*

4.3.3. Test data

Band IV (5725 - 5850 MHz)					
Mode	Test channel	Frequency (MHz)	6 dB Bandwidth (MHz)	Limit (MHz)	Result
11a	CH149	5745	16.35	0.5	PASS
11a	CH157	5785	16.33	0.5	PASS
11a	CH165	5825	16.35	0.5	PASS
11n HT20	CH149	5745	16.90	0.5	PASS
11n HT20	CH157	5785	17.18	0.5	PASS
11n HT20	CH165	5825	16.92	0.5	PASS
11n HT40	CH151	5755	35.75	0.5	PASS
11n HT40	CH159	5795	35.84	0.5	PASS
11ac HT20	CH149	5745	17.19	0.5	PASS
11ac HT20	CH157	5785	17.19	0.5	PASS
11ac HT20	CH165	5825	16.96	0.5	PASS
11ac HT40	CH151	5755	36.00	0.5	PASS
11ac HT40	CH159	5795	35.55	0.5	PASS
11ac HT80	CH155	5775	75.49	0.5	PASS

Test plots as follows:

Band IV (5725 – 5850 MHz)

802.11a

Low

Mid

High

802.11n HT20

Low

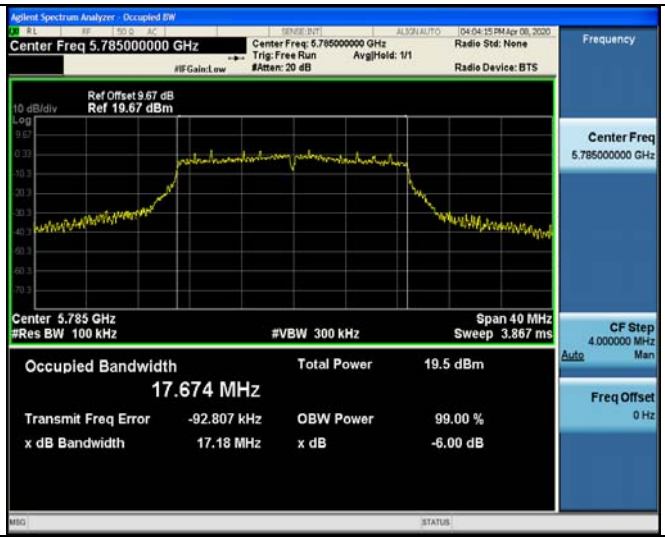

Mid

High

802.11n HT40

Low

High

802.11ac HT20

Low

Middle

High

802.11ac HT40

Low

High

802.11ac HT80

4.4. 26dB Bandwidth and 99% Occupied Bandwidth

4.4.1. Test Specification

Test Requirement:	47 CFR Part 15C Section 15.407 (a)
Test Method:	KDB789033 D02 General UNII Test Procedures New Rules v02r01 Section C
Limit:	No restriction limits
Test Setup:	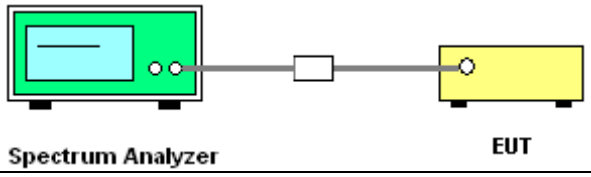
Test Mode:	Transmitting mode with modulation
Test Procedure:	1. KDB789033 D02 General UNII Test Procedures New Rules v02r01 Section C 2. Set to the maximum power setting and enable the EUT transmit continuously. 3. Make the measurement with the spectrum analyzer's resolution bandwidth RBW = 1% EBW, VBW≥3RBW, In order to make an accurate measurement. 4. Measure and record the results in the test report.
Test Result:	N/A

4.4.2. Test Instruments

RF Test Room					
Equipment	**Manufacturer**	**Model**	**Serial Number**	**Calibration Date**	**Calibration Due**
Spectrum analyzer	Agilent	N9020A	HKE-048	Dec. 26, 2019	Dec. 25, 2020
RF cable	Times	1-40G	HKE-034	Dec. 26, 2019	Dec. 25, 2020
RF automatic control unit	Tonscend	JS0806-2	HKE-060	Dec. 26, 2019	Dec. 25, 2020

Note: *The calibration interval of the above test instruments is 12 months and the calibrations are traceable to international system unit (SI).*

4.4.3. Test Result

N/A

4.5. Power Spectral Density

4.5.1. Test Specification

Test Requirement:	FCC Part15 E Section 15.407 (a)
Test Method:	KDB789033 D02 General UNII Test Procedures New Rules v02r01 Section F
Limit:	≤11.00dBm/MHz for Band I 5150MHz-5250MHz ≤30.00dBm/500KHz for Band IV 5725MHz-5850MHz The e.i,r,p spectral density for Band I 5150MHz – 5250 MHz should not exceed 10dBm/MHz
Test Setup:	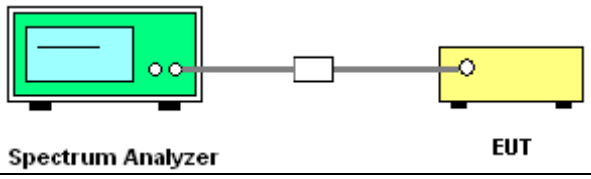
Test Mode:	Transmitting mode with modulation
Test Procedure:	1. Set the spectrum analyzer or EMI receiver span to view the entire emission bandwidth. 1. Set RBW = 510 kHz/1 MHz, VBW ≥ 3*RBW, Sweep time = Auto, Detector = RMS. 2. Allow the sweeps to continue until the trace stabilizes. 3. Use the peak marker function to determine the maximum amplitude level. 4. The E.I.R.P spectral density used radiated test method. At a test site that has been validated using the procedures of ANSI C63.4 or the latest CISPR 16-1-4 for measurements above 1 GHz, so as to simulate a near free-space environment.
Test Result:	PASS

4.5.2. Test Instruments

RF Test Room					
Equipment	**Manufacturer**	**Model**	**Serial Number**	**Calibration Date**	**Calibration Due**
Spectrum analyzer	Agilent	N9020A	HKE-048	Dec. 26, 2019	Dec. 25, 2020
RF cable	Times	1-40G	HKE-034	Dec. 26, 2019	Dec. 25, 2020
RF automatic control unit	Tonscend	JS0806-2	HKE-060	Dec. 26, 2019	Dec. 25, 2020

Note: *The calibration interval of the above test instruments is 12 months and the calibrations are traceable to international system unit (SI).*

4.5.3. Test data

Configuration Band IV (5725 - 5850 MHz)							
Mode	Test channel	Level [dBm/510kHz]	10log(1/x) Factor[dB]	10log(500/510)	Power Spectral Density	Limit (dBm/500kHz)	Result
11a	CH149	6.55	0	-0.086	6.464	30	PASS
11a	CH157	5.94	0	-0.086	5.854	30	PASS
11a	CH165	6.30	0	-0.086	6.214	30	PASS
11n HT20	CH149	6.09	0	-0.086	6.004	30	PASS
11n HT20	CH157	5.41	0	-0.086	5.324	30	PASS
11n HT20	CH165	6.26	0	-0.086	6.174	30	PASS
11n HT40	CH151	3.29	0	-0.086	3.204	30	PASS
11n HT40	CH159	2.41	0	-0.086	2.324	30	PASS
11ac HT20	CH149	5.89	0	-0.086	5.804	30	PASS
11ac HT20	CH157	5.83	0	-0.086	5.744	30	PASS
11ac HT20	CH165	6.35	0	-0.086	6.264	30	PASS
11ac HT40	CH151	3.28	0	-0.086	3.194	30	PASS
11ac HT40	CH159	2.91	0	-0.086	2.824	30	PASS
11ac HT80	CH155	0.15	0	-0.086	0.064	30	PASS

Test plots as follows:

Band IV (5725 – 5850 MHz)

802.11a
Low
Mid
High

802.11n HT20
 Low
 Mid
 High

802.11n HT40
Low
High
802.11ac HT20
Low

Middle

High

802.11ac HT40

Low

High

802.11ac HT80

4.6. Band edge

4.6.1. Test Specification

Test Requirement:	FCC CFR47 Part 15E Section 15.407
Test Method:	ANSI C63.10 2013
Limit:	(1) For transmitters operating in the 5.15-5.25 GHz band: All emissions outside of the 5.15-5.35 GHz band shall not exceed an e.i.r.p. of −27 dBm/MHz. (2) For transmitters operating in the 5.25-5.35 GHz band: All emissions outside of the 5.15-5.35 GHz band shall not exceed an e.i.r.p. of −27 dBm/MHz. (3) For transmitters operating in the 5.47-5.725 GHz band: All emissions outside of the 5.47-5.725 GHz band shall not exceed an e.i.r.p. of −27 dBm/MHz. (4) For transmitters operating in the 5.725-5.85 GHz band: (i) All emissions shall be limited to a level of −27 dBm/MHz at 75 MHz or more above or below the band edge increasing linearly to 10 dBm/MHz at 25 MHz above or below the band edge, and from 25 MHz above or below the band edge increasing linearly to a level of 15.6 dBm/MHz at 5 MHz above or below the band edge, and from 5 MHz above or below the band edge increasing linearly to a level of 27 dBm/MHz at the band edge. The limit of frequency below 1GHz and which fall in restricted ba nds should complies 15.209.
Test Setup:	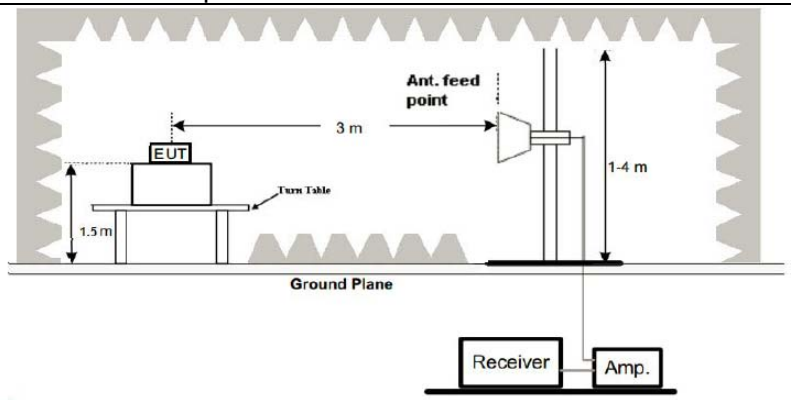
Test Mode:	Transmitting mode with modulation
Test Procedure:	1. The EUT was placed on the top of a rotating table 0.8 meters above the ground at a 3 meter camber. The table was rotated 360 degrees to determine the position of the highest radiation. 2. The EUT was set 3 meters away from the interference-receiving antenna, which was mounted on the top of a variable-height antenna tower. 3. The antenna height is varied from one meter to four meters above the ground to determine the maximum value of the field strength. Both horizontal and vertical polarizations of the antenna are set to make the measurement. 4. For each suspected emission, the EUT was arranged to its worst case and then the antenna was tuned to heights from 1 meter to 4 meters and the rota table was

	turned from 0 degrees to 360 degrees to find the maximum reading. 5. The test-receiver system was set to Peak Detect Function and Specified Bandwidth with Maximum Hold Mode. 6. If the emission level of the EUT in peak mode was 10dB lower than the limit specified, then testing could be stopped and the peak values of the EUT would be reported. Otherwise the emissions that did not have 10dB margin would be re-tested one by one using peak, quasipeak or average method as specified and then reported in a data sheet.
Test Result:	PASS

4.6.2. Test Instruments

Radiated Emission Test Site (966)					
Name of Equipment	**Manufacturer**	**Model**	**Serial Number**	**Calibration Date**	**Calibration Due**
Receiver	R&S	ESRP3	HKE-005	Dec. 26, 2019	Dec. 25, 2020
Spectrum analyzer	Agilent	N9020A	HKE-048	Dec. 26, 2019	Dec. 25, 2020
Preamplifier	EMCI	EMC051845SE	HKE-015	Dec. 26, 2019	Dec. 25, 2020
Preamplifier	Agilent	83051A	HKE-016	Dec. 26, 2019	Dec. 25, 2020
Loop antenna	Schwarzbeck	FMZB 1519 B	HKE-014	Dec. 26, 2019	Dec. 25, 2020
Broadband antenna	Schwarzbeck	VULB 9163	HKE-012	Dec. 26, 2019	Dec. 25, 2020
Horn antenna	Schwarzbeck	9120D	HKE-013	Dec. 26, 2019	Dec. 25, 2020
Antenna Mast	Keleto	CC-A-4M	N/A	N/A	N/A
Position controller	Taiwan MF	MF7802	HKE-011	Dec. 26, 2019	Dec. 25, 2020
Radiated test software	Tonscend	TS+ Rev 2.5.0.0	HKE-082	N/A	N/A
RF cable (9KHz-1GHz)	Times	381806-001	N/A	N/A	N/A
Hf antenna	Schwarzbeck	LB-180400-KF	HKE-031	Dec. 26, 2019	Dec. 25, 2020
RF cable	Tonscend	1-18G	HKE-099	Dec. 26, 2019	Dec. 25, 2020
RF cable	Times	1-40G	HKE-034	Dec. 26, 2019	Dec. 25, 2020

Note: *The calibration interval of the above test instruments is 12 months and the calibrations are traceable to international system unit (SI).*

4.6.3. Test Data

Operation Mode: 802.11a Mode with 5.8G TX CH Low
Horizontal

Frequency	Meter Reading	Factor	Emission Level	Limits	Margin	Detector Type
(MHz)	(dBμV)	(dB)	(dBμV/m)	(dBμV/m)	(dB)	
5650	57.28	-2.06	55.22	68.2	-12.98	peak
5700	88.29	-1.96	86.33	105.2	-18.87	peak
5720	92.57	-2.87	89.7	110.8	-21.1	peak
5725	110.31	-2.14	108.17	122.2	-14.03	peak
Remark: Factor = Antenna Factor + Cable Loss – Pre-amplifier.						

Vertical:

Frequency	Meter Reading	Factor	Emission Level	Limits	Margin	Detector Type
(MHz)	(dBμV)	(dB)	(dBμV/m)	(dBμV/m)	(dB)	
5650	57.63	-2.06	55.57	68.2	-12.63	peak
5700	87.64	-1.96	85.68	105.2	-19.52	peak
5720	94.04	-2.87	91.17	110.8	-19.63	peak
5725	112.31	-2.14	110.17	122.2	-12.03	peak
Remark: Factor = Antenna Factor + Cable Loss – Pre-amplifier.						

Operation Mode: TX CH High with 5.8G

Horizontal

Frequency (MHz)	Meter Reading (dBμV)	Factor (dB)	Emission Level (dBμV/m)	Limits (dBμV/m)	Margin (dB)	Detector Type
5850	110.37	-1.97	108.4	122.2	-13.8	peak
5855	94.27	-2.13	92.14	110.8	-18.66	peak
5875	88.05	-2.65	85.4	105.2	-19.8	peak
5925	53.86	-2.28	51.58	68.2	-16.62	peak
Remark: Factor = Antenna Factor + Cable Loss – Pre-amplifier.						

Vertical:

Frequency (MHz)	Meter Reading (dBμV)	Factor (dB)	Emission Level (dBμV/m)	Limits (dBμV/m)	Margin (dB)	Detector Type
5850	114.03	-1.97	112.06	122.2	-10.14	peak
5855	93.45	-2.13	91.32	110.8	-19.48	peak
5875	88.04	-2.65	85.39	105.2	-19.81	peak
5925	54.03	-2.28	51.75	68.2	-16.45	peak
Remark: Factor = Antenna Factor + Cable Loss – Pre-amplifier.						

Operation Mode: 802.11n20 Mode with 5.8G TX CH Low

Horizontal

Frequency	Meter Reading	Factor	Emission Level	Limits	Margin	Detector Type
(MHz)	(dBμV)	(dB)	(dBμV/m)	(dBμV/m)	(dB)	
5650	57.24	-2.06	55.18	68.2	-13.02	peak
5700	90.31	-1.96	88.35	105.2	-16.85	peak
5720	96.37	-2.87	93.5	110.8	-17.3	peak
5725	113.28	-2.14	111.14	122.2	-11.06	peak
Remark: Factor = Antenna Factor + Cable Loss – Pre-amplifier.						

Vertical:

Frequency	Meter Reading	Factor	Emission Level	Limits	Margin	Detector Type
(MHz)	(dBμV)	(dB)	(dBμV/m)	(dBμV/m)	(dB)	
5650	61.48	-2.06	59.42	68.2	-8.78	peak
5700	96.44	-1.96	94.48	105.2	-10.72	peak
5720	94.26	-2.87	91.39	110.8	-19.41	peak
5725	112.21	-2.14	110.07	122.2	-12.13	peak
Remark: Factor = Antenna Factor + Cable Loss – Pre-amplifier.						

Operation Mode: TX CH High with 5.8G
Horizontal

Frequency	Meter Reading	Factor	Emission Level	Limits	Margin	Detector Type
(MHz)	(dBμV)	(dB)	(dBμV/m)	(dBμV/m)	(dB)	
5850	110.12	-1.97	108.15	122.2	-14.05	peak
5855	95.61	-2.13	93.48	110.8	-17.32	peak
5875	89.64	-2.65	86.99	105.2	-18.21	peak
5925	54.32	-2.28	52.04	68.2	-16.16	peak
Remark: Factor = Antenna Factor + Cable Loss – Pre-amplifier.						

Vertical:

Frequency	Meter Reading	Factor	Emission Level	Limits	Margin	Detector Type
(MHz)	(dBμV)	(dB)	(dBμV/m)	(dBμV/m)	(dB)	
5850	110.61	-1.97	108.64	122.2	-13.56	peak
5855	94.25	-2.13	92.12	110.8	-18.68	peak
5875	86.54	-2.65	83.89	105.2	-21.31	peak
5925	57.33	-2.28	55.05	68.2	-13.15	peak
Remark: Factor = Antenna Factor + Cable Loss – Pre-amplifier.						

Operation Mode: 802.11n40 Mode with 5.8G TX CH Low

Horizontal

Frequency	Meter Reading	Factor	Emission Level	Limits	Margin	Detector Type
(MHz)	(dBμV)	(dB)	(dBμV/m)	(dBμV/m)	(dB)	
5650	57.68	-2.06	55.62	68.2	-12.58	peak
5700	93.16	-1.96	91.2	105.2	-14	peak
5720	92.47	-2.87	89.6	110.8	-21.2	peak
5725	112.34	-2.14	110.2	122.2	-12	peak
Remark: Factor = Antenna Factor + Cable Loss – Pre-amplifier.						

Vertical:

Frequency	Meter Reading	Factor	Emission Level	Limits	Margin	Detector Type
(MHz)	(dBμV)	(dB)	(dBμV/m)	(dBμV/m)	(dB)	
5650	61.37	-2.06	59.31	68.2	-8.89	peak
5700	96.49	-1.96	94.53	105.2	-10.67	peak
5720	90.37	-2.87	87.5	110.8	-23.3	peak
5725	112.48	-2.14	110.34	122.2	-11.86	peak
Remark: Factor = Antenna Factor + Cable Loss – Pre-amplifier.						

Operation Mode: TX CH High with 5.8G
Horizontal

Frequency	Meter Reading	Factor	Emission Level	Limits	Margin	Detector Type
(MHz)	(dBμV)	(dB)	(dBμV/m)	(dBμV/m)	(dB)	
5850	112.4	-1.97	110.43	122.2	-11.77	peak
5855	94.61	-2.13	92.48	110.8	-18.32	peak
5875	87.32	-2.65	84.67	105.2	-20.53	peak
5925	54.53	-2.28	52.25	68.2	-15.95	peak
Remark: Factor = Antenna Factor + Cable Loss – Pre-amplifier.						

Vertical:

Frequency	Meter Reading	Factor	Emission Level	Limits	Margin	Detector Type
(MHz)	(dBμV)	(dB)	(dBμV/m)	(dBμV/m)	(dB)	
5850	108.31	-1.97	106.34	122.2	-15.86	peak
5855	91.73	-2.13	89.6	110.8	-21.2	peak
5875	85.39	-2.65	82.74	105.2	-22.46	peak
5925	54.72	-2.28	52.44	68.2	-15.76	peak
Remark: Factor = Antenna Factor + Cable Loss – Pre-amplifier.						

Operation Mode: 802.11ac20 Mode with 5.8G TX CH Low

Horizontal

Frequency	Meter Reading	Factor	Emission Level	Limits	Margin	Detector Type
(MHz)	(dBμV)	(dB)	(dBμV/m)	(dBμV/m)	(dB)	
5650	57.95	-2.06	55.89	68.2	-12.31	peak
5700	88.23	-1.96	86.27	105.2	-18.93	peak
5720	93.63	-2.87	90.76	110.8	-20.04	peak
5725	110.34	-2.14	108.2	122.2	-14	peak
Remark: Factor = Antenna Factor + Cable Loss – Pre-amplifier.						

Vertical:

Frequency	Meter Reading	Factor	Emission Level	Limits	Margin	Detector Type
(MHz)	(dBμV)	(dB)	(dBμV/m)	(dBμV/m)	(dB)	
5650	58.63	-2.06	56.57	68.2	-11.63	peak
5700	91.34	-1.96	89.38	105.2	-15.82	peak
5720	93.63	-2.87	90.76	110.8	-20.04	peak
5725	110.67	-2.14	108.53	122.2	-13.67	peak
Remark: Factor = Antenna Factor + Cable Loss – Pre-amplifier.						

Operation Mode: TX CH High with 5.8G

Horizontal

Frequency (MHz)	Meter Reading (dBμV)	Factor (dB)	Emission Level (dBμV/m)	Limits (dBμV/m)	Margin (dB)	Detector Type
5850	110.36	-1.97	108.39	122.2	-13.81	peak
5855	95.33	-2.13	93.2	110.8	-17.6	peak
5875	89.46	-2.65	86.81	105.2	-18.39	peak
5925	54.09	-2.28	51.81	68.2	-16.39	peak
Remark: Factor = Antenna Factor + Cable Loss – Pre-amplifier.						

Vertical:

Frequency (MHz)	Meter Reading (dBμV)	Factor (dB)	Emission Level (dBμV/m)	Limits (dBμV/m)	Margin (dB)	Detector Type
5850	110.63	-1.97	108.66	122.2	-13.54	peak
5855	90.64	-2.13	88.51	110.8	-22.29	peak
5875	84.35	-2.65	81.7	105.2	-23.5	peak
5925	56.15	-2.28	53.87	68.2	-14.33	peak
Remark: Factor = Antenna Factor + Cable Loss – Pre-amplifier.						

Operation Mode: 802.11ac40 Mode with 5.8G TX CH Low

Horizontal

Frequency	Meter Reading	Factor	Emission Level	Limits	Margin	Detector Type
(MHz)	(dBμV)	(dB)	(dBμV/m)	(dBμV/m)	(dB)	
5650	58.65	-2.06	56.59	68.2	-11.61	peak
5700	88.63	-1.96	86.67	105.2	-18.53	peak
5720	94.64	-2.87	91.77	110.8	-19.03	peak
5725	110.66	-2.14	108.52	122.2	-13.68	peak
Remark: Factor = Antenna Factor + Cable Loss – Pre-amplifier.						

Vertical:

Frequency	Meter Reading	Factor	Emission Level	Limits	Margin	Detector Type
(MHz)	(dBμV)	(dB)	(dBμV/m)	(dBμV/m)	(dB)	
5650	57.61	-2.06	55.55	68.2	-12.65	peak
5700	87.16	-1.96	85.2	105.2	-20	peak
5720	94.16	-2.87	91.29	110.8	-19.51	peak
5725	112.49	-2.14	110.35	122.2	-11.85	peak
Remark: Factor = Antenna Factor + Cable Loss – Pre-amplifier.						

Operation Mode: TX CH High with 5.8G

Horizontal

Frequency (MHz)	Meter Reading (dBμV)	Factor (dB)	Emission Level (dBμV/m)	Limits (dBμV/m)	Margin (dB)	Detector Type
5850	113.64	-1.97	111.67	122.2	-10.53	peak
5855	91.51	-2.13	89.38	110.8	-21.42	peak
5875	86.33	-2.65	83.68	105.2	-21.52	peak
5925	54.19	-2.28	51.91	68.2	-16.29	peak
Remark: Factor = Antenna Factor + Cable Loss – Pre-amplifier.						

Vertical:

Frequency (MHz)	Meter Reading (dBμV)	Factor (dB)	Emission Level (dBμV/m)	Limits (dBμV/m)	Margin (dB)	Detector Type
5850	112.64	-1.97	110.67	122.2	-11.53	peak
5855	92.91	-2.13	90.78	110.8	-20.02	peak
5875	87.16	-2.65	84.51	105.2	-20.69	peak
5925	66.03	-2.28	63.75	68.2	-4.45	peak
Remark: Factor = Antenna Factor + Cable Loss – Pre-amplifier.						

Operation Mode: 802.11ac80 Mode with 5.8G TX CH Low

Horizontal

Frequency	Meter Reading	Factor	Emission Level	Limits	Margin	Detector Type
(MHz)	(dBμV)	(dB)	(dBμV/m)	(dBμV/m)	(dB)	
5650	57.61	-2.06	55.55	68.2	-12.65	peak
5700	87.63	-1.96	85.67	105.2	-19.53	peak
5720	94.61	-2.87	91.74	110.8	-19.06	peak
5725	112.63	-2.14	110.49	122.2	-11.71	peak
Remark: Factor = Antenna Factor + Cable Loss – Pre-amplifier.						

Vertical:

Frequency	Meter Reading	Factor	Emission Level	Limits	Margin	Detector Type
(MHz)	(dBμV)	(dB)	(dBμV/m)	(dBμV/m)	(dB)	
5650	57.15	-2.06	55.09	68.2	-13.11	peak
5700	91.45	-1.96	89.49	105.2	-15.71	peak
5720	94.32	-2.87	91.45	110.8	-19.35	peak
5725	112.57	-2.14	110.43	122.2	-11.77	peak
Remark: Factor = Antenna Factor + Cable Loss – Pre-amplifier.						

Operation Mode: TX CH High with 5.8G

Horizontal

Frequency (MHz)	Meter Reading (dBμV)	Factor (dB)	Emission Level (dBμV/m)	Limits (dBμV/m)	Margin (dB)	Detector Type
5850	111.03	-1.97	109.06	122.2	-13.14	peak
5855	92.46	-2.13	90.33	110.8	-20.47	peak
5875	85.65	-2.65	83	105.2	-22.2	peak
5925	52.43	-2.28	50.15	68.2	-18.05	peak
Remark: Factor = Antenna Factor + Cable Loss – Pre-amplifier.						

Vertical:

Frequency (MHz)	Meter Reading (dBμV)	Factor (dB)	Emission Level (dBμV/m)	Limits (dBμV/m)	Margin (dB)	Detector Type
5850	112.54	-1.97	110.57	122.2	-11.63	peak
5855	94.61	-2.13	92.48	110.8	-18.32	peak
5875	82.11	-2.65	79.46	105.2	-25.74	peak
5925	56.33	-2.28	54.05	68.2	-14.15	peak
Remark: Factor = Antenna Factor + Cable Loss – Pre-amplifier.						

4.7. Spurious Emission

4.7.1.1. Test Specification

<table>
<tr><td>Test Requirement:</td><td>FCC CFR47 Part 15 Section 15.407 & 15.209 & 15.205</td></tr>
<tr><td>Test Method:</td><td>KDB 789033 D02 v02r01</td></tr>
<tr><td>Frequency Range:</td><td>9kHz to 40GHz</td></tr>
<tr><td>Measurement Distance:</td><td>3 m</td></tr>
<tr><td>Antenna Polarization:</td><td>Horizontal & Vertical</td></tr>
<tr><td>Operation mode:</td><td>Transmitting mode with modulation</td></tr>
<tr><td>Receiver Setup:</td><td>
<table>
<tr><td>Frequency</td><td>Detector</td><td>RBW</td><td>VBW</td><td>Remark</td></tr>
<tr><td>9kHz- 150kHz</td><td>Quasi-peak</td><td>200Hz</td><td>1kHz</td><td>Quasi-peak Value</td></tr>
<tr><td>150kHz-30MHz</td><td>Quasi-peak</td><td>9kHz</td><td>30kHz</td><td>Quasi-peak Value</td></tr>
<tr><td>30MHz-1GHz</td><td>Quasi-peak</td><td>120KHz</td><td>300KHz</td><td>Quasi-peak Value</td></tr>
<tr><td rowspan="2">Above 1GHz</td><td>Peak</td><td>1MHz</td><td>3MHz</td><td>Peak Value</td></tr>
<tr><td>Peak</td><td>1MHz</td><td>10Hz</td><td>Average Value</td></tr>
</table>
</td></tr>
<tr><td>Limit:</td><td>(1) For transmitters operating in the 5.15-5.25 GHz band: All emissions outside of the 5.15-5.35 GHz band shall not exceed an e.i.r.p. of −27 dBm/MHz.
(2) For transmitters operating in the 5.25-5.35 GHz band: All emissions outside of the 5.15-5.35 GHz band shall not exceed an e.i.r.p. of −27 dBm/MHz.
(3) For transmitters operating in the 5.47-5.725 GHz band: All emissions outside of the 5.47-5.725 GHz band shall not exceed an e.i.r.p. of −27 dBm/MHz.
(4) For transmitters operating in the 5.725-5.85 GHz band:
(i) All emissions shall be limited to a level of −27 dBm/MHz at 75 MHz or more above or below the band edge increasing linearly to 10 dBm/MHz at 25 MHz above or below the band edge, and from 25 MHz above or below the band edge increasing linearly to a level of 15.6 dBm/MHz at 5 MHz above or below the band edge, and from 5 MHz above or below the band edge increasing linearly to a level of 27 dBm/MHz at the band edge.
The limit of frequency below 1GHz and which fall in rest ricted bands should complies 15.209.</td></tr>
<tr><td>Test setup:</td><td>For radiated emissions below 30MHz</td></tr>
</table>

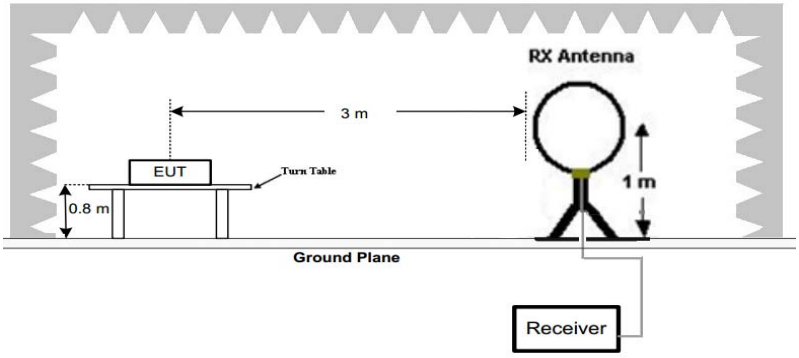

30MHz to 1GHz

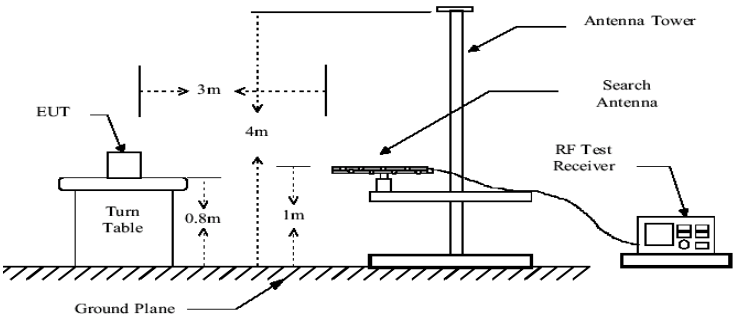

Above 1GHz

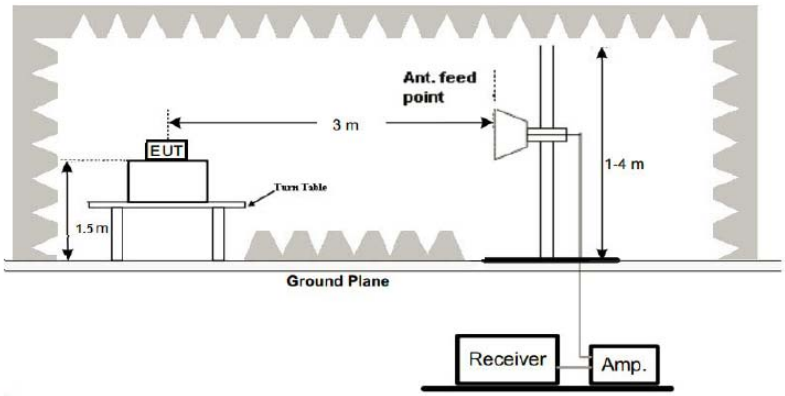

Test Procedure:

1. The EUT was placed on the top of a rotating table 0.8 meters above the groundat a 3 meter camber. The table was rotated 360 degrees todetermine the position of the highest radiation.
2. The EUT was set 3 meters away from the interference-receiving antenna, whichwas mounted on the top of a variable-height antenna tower.
3. The antenna height is varied from one meter to four meters above the ground to determine the maximum value of the field strength. Both horizontal and vertical polarizations of the antenna are set to make the measurement.
4. For each suspected emission, the EUT was arranged to its worst case and thenthe antenna was tuned to heights from 1 meter to 4 meters and the rotatablewas turned from 0 degrees to 360 degrees to find the maximum reading.

	5. The test-receiver system was set to Peak Detect Function and SpecifiedBandwidth with Maximum Hold Mode. 6. If the emission level of the EUT in peak mode was 10dB lower than the limitspecified, then testing could be stopped and the peak values of the EUT wouldbe reported. Otherwise the emissions that did not have 10dB margin would bere-tested one by one using peak, quasi-peak or average method as specified andthen reported in a data sheet.
Test results:	PASS

4.7.2. Test Data

Remark: All the test modes completed for test. The worst case of Radiated Emission is CH 149; the test data of this mode was reported.

Below 1GHz

Horizontal

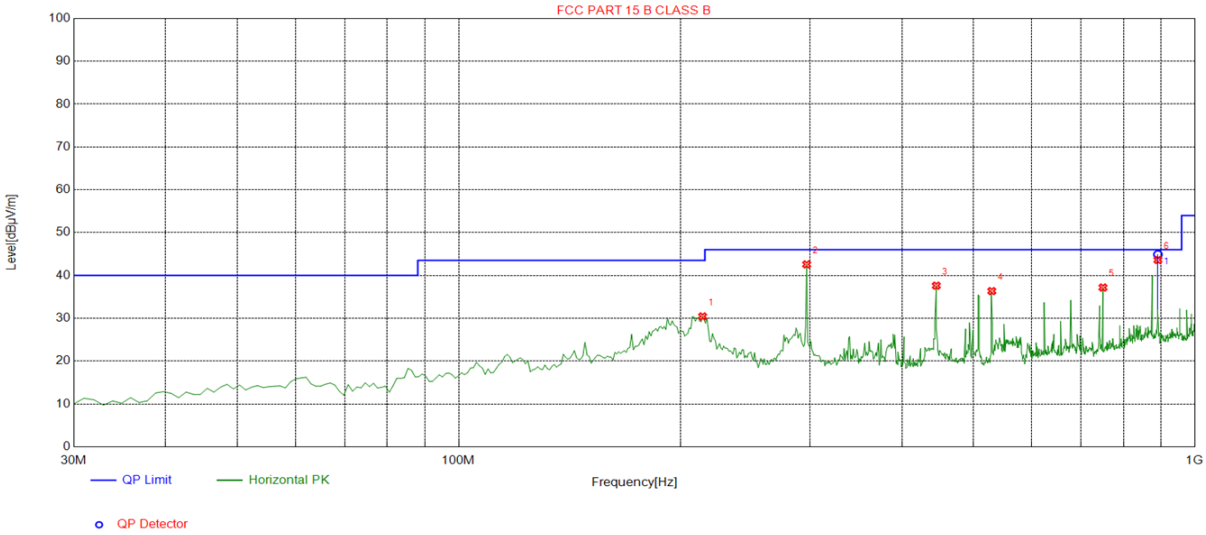

Suspected List									
NO.	Freq. [MHz]	Factor [dB]	Reading [dBμV/m]	Level [dBμV/m]	Limit [dBμV/m]	Margin [dB]	Height [cm]	Angle [°]	Polarity
1	214.4845	-14.69	45.12	30.43	43.50	13.07	100	348	Horizontal
2	297.0170	-12.77	55.35	42.58	46.00	3.42	100	180	Horizontal
3	445.5756	-9.18	46.79	37.61	46.00	8.39	100	239	Horizontal
4	530.0501	-7.45	43.79	36.34	46.00	9.66	100	216	Horizontal
5	750.4605	-3.71	40.89	37.18	46.00	8.82	100	113	Horizontal
6	891.2513	-1.87	45.48	43.61	46.00	2.39	100	68	Horizontal

Final Data List									
NO.	Freq. [MHz]	Factor [dB]	QP Reading [dBμV/m]	QP Value [dBμV/m]	QP Limit [dBμV/m]	QP Margin [dB]	Height [cm]	Angle [°]	Polarity
1	891.0580	-1.87	46.26	44.90	46.00	1.61	120	54.2	Horizontal

Remark: Factor = Cable loss + Antenna factor – Preamplifier; Level = Reading + Factor; Margin = Limit – Level

Vertical

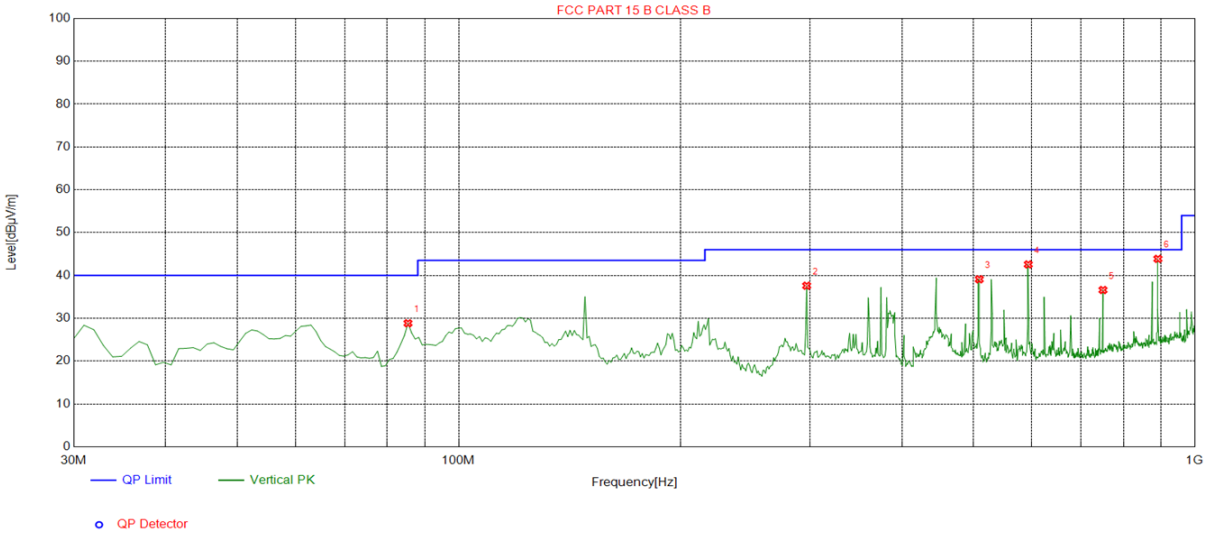

Suspected List									
NO.	Freq. [MHz]	Factor [dB]	Reading [dBμV/m]	Level [dBμV/m]	Limit [dBμV/m]	Margin [dB]	Height [cm]	Angle [°]	Polarity
1	85.3453	-18.19	47.03	28.84	40.00	11.16	100	174	Vertical
2	297.0170	-12.77	50.37	37.60	46.00	8.40	100	37	Vertical
3	509.6597	-8.02	47.12	39.10	46.00	6.90	100	167	Vertical
4	594.1341	-6.50	49.07	42.57	46.00	3.43	100	138	Vertical
5	750.4605	-3.71	40.30	36.59	46.00	9.41	100	339	Vertical
6	891.2513	-1.87	45.74	43.87	46.00	2.13	100	148	Vertical

Remark: Factor = Cable loss + Antenna factor – Preamplifier; Level = Reading + Factor; Margin = Limit – Level

Note：radiated emission which above the 15.209 is from unintentional part, which will be subject to 15.109

Harmonics and Spurious Emissions

Frequency Range (9 kHz-30MHz)

Frequency (MHz)	Level@3m (dBμV/m)	Limit@3m (dBμV/m)
--	--	--
--	--	--
--	--	--
--	--	--

Note: *1. Emission Level=Reading+ Cable loss-Antenna factor-Amp factor*

2. The emission levels are 20 dB below the limit value, which are not reported. It is deemed to comply with the requirement

Above 1GHz

LOW CH 149 (802.11 a Mode with 5.8G)/5745

Horizontal:

Frequency	Meter Reading	Factor	Emission Level	Limits	Margin	Detector Type
(MHz)	(dBμV)	(dB)	(dBμV/m)	(dBμV/m)	(dB)	
3647	64.71	-4.59	60.12	74	-13.88	peak
3647	47.26	-4.59	42.67	54	-11.33	AVG
11570	51.35	4.21	55.56	74	-18.44	peak
11570	38.54	4.21	42.75	54	-11.25	AVG
Remark: Factor = Antenna Factor + Cable Loss – Pre-amplifier.						

Vertical:

Frequency	Meter Reading	Factor	Emission Level	Limits	Margin	Detector Type
(MHz)	(dBμV)	(dB)	(dBμV/m)	(dBμV/m)	(dB)	
3647	63.18	-4.59	58.59	74	-15.41	peak
3647	48.65	-4.59	44.06	54	-9.94	AVG
11570	55.77	4.21	59.98	74	-14.02	peak
11570	37.45	4.21	41.66	54	-12.34	AVG
Remark: Factor = Antenna Factor + Cable Loss – Pre-amplifier.						

MID CH157 (802.11 a Mode with 5.8G)/5785

Horizontal:

Frequency	Meter Reading	Factor	Emission Level	Limits	Margin	Detector Type
(MHz)	(dBμV)	(dB)	(dBμV/m)	(dBμV/m)	(dB)	
3647	60.17	-4.59	55.58	74	-18.42	peak
3647	48.62	-4.59	44.03	54	-9.97	AVG
11570	54.78	4.21	58.99	74	-15.01	peak
11570	40.23	4.21	44.44	54	-9.56	AVG
Remark: Factor = Antenna Factor + Cable Loss – Pre-amplifier.						

Vertical:

Frequency	Meter Reading	Factor	Emission Level	Limits	Margin	Detector Type
(MHz)	(dBμV)	(dB)	(dBμV/m)	(dBμV/m)	(dB)	
3647	60.43	-4.59	55.84	74	-18.16	peak
3647	48.62	-4.59	44.03	54	-9.97	AVG
11570	51.54	4.21	55.75	74	-18.25	peak
11570	37.64	4.21	41.85	54	-12.15	AVG
Remark: Factor = Antenna Factor + Cable Loss – Pre-amplifier.						

HIGH CH 165 (802.11a Mode with 5.8G)/5825

Horizontal:

Frequency	Meter Reading	Factor	Emission Level	Limits	Margin	Detector Type
(MHz)	(dBμV)	(dB)	(dBμV/m)	(dBμV/m)	(dB)	
3647	61.77	-4.59	57.18	74	-16.82	peak
3647	49.64	-4.59	45.05	54	-8.95	AVG
11650	55.22	4.84	60.06	74	-13.94	peak
11650	39.63	4.84	44.47	54	-9.53	AVG
Remark: Factor = Antenna Factor + Cable Loss – Pre-amplifier.						

Vertical:

Frequency	Meter Reading	Factor	Emission Level	Limits	Margin	Detector Type
(MHz)	(dBμV)	(dB)	(dBμV/m)	(dBμV/m)	(dB)	
3647	58.07	-4.59	53.48	74	-20.52	peak
3647	48.64	-4.59	44.05	54	-9.95	AVG
11650	51.43	4.84	56.27	74	-17.73	peak
11650	38.68	4.84	43.52	54	-10.48	AVG
Remark: Factor = Antenna Factor + Cable Loss – Pre-amplifier.						

Remark：
(1) Measuring frequencies from 1 GHz to the 40 GHz。
(2) “F” denotes fundamental frequency; “H” denotes spurious frequency. “E” denotes band edge frequency.
(3) * denotes emission frequency which appearing within the Restricted Bands specified in provision of 15.205, then the general radiated emission limits in 15.209 apply.
(4) The emissions are attenuated more than 20dB below the permissible limits are not recorded in the report.
(5) The IF bandwidth of EMI Test Receiver between 30MHz to 1GHz was 120KHz, 1 MHz for measuring above 1 GHz, below 30MHz was 10KHz.
(6) When the test results of Peak Detected below the limits of Average Detected, the Average Detected is not need completed. For example: Top Channel at Fundamental 73.16dBuV/m(PK Value) <93.98(AV Limit), at harmonic 53.20 dBuV/m(PK Value) <54 dBuV/m(AV Limit), the Average Detected not need to completed.

4.8. Frequency Stability Measurement

4.8.1. Test Specification

Test Requirement:	FCC Part15 Section 15.407(g)
Test Method:	ANSI C63.10: 2013
Limit:	The frequency tolerance shall be maintained within the band of operation frequency over a temperature variation of 0 degrees to 35 degrees C at normal supply voltage, and for a variation in the primary supply voltage from 85% to 115% of the rated supply voltage at a temperature of 20 degrees C.
Test Setup:	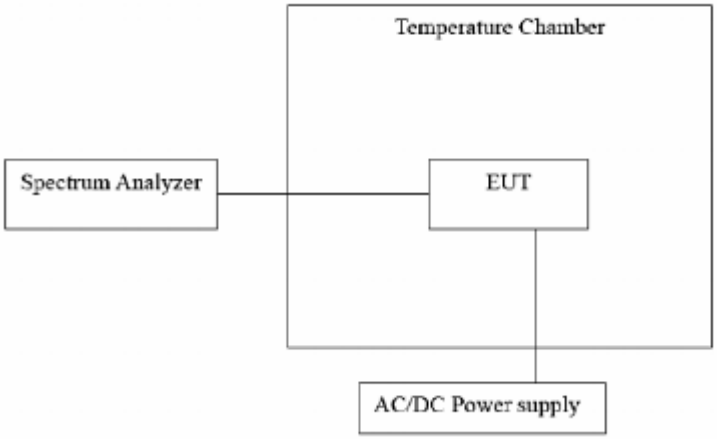
Test Procedure:	The EUT was placed inside the environmental test chamber and powered by nominal AC/DC voltage. b. Turn the EUT on and couple its output to a spectrum analyzer. c. Turn the EUT off and set the chamber to the highest temperature specified. d. Allow sufficient time (approximately 30 min) for the temperature of the chamber to stabilize. e. Repeat step 2 and 3 with the temperature chamber set to the lowest temperature. f. The test chamber was allowed to stabilize at +20 degree C for a minimum of 30 minutes. The supply voltage was then adjusted on the EUT from 85% to 115% and the frequency record.
Test Result:	PASS
Remark:	N/A

Test Result as follows:

Mode	Voltage (V)	FHL (5745MHz)	Deviation (KHz)	FHH (5825MHz)	Deviation (KHz)
5.8G Band	**5V**	5744.985	0.015	5824.965	0.035
	5.75V	5745.029	-0.029	5825.032	-0.032
	4.25V	5745.013	-0.013	5824.987	0.013

Mode	Temperature (℃)	FHL (5745MHz)	Deviation (KHz)	FHH (5825MHz)	Deviation (KHz)
5.8G Band	-30	5744.986	0.014	5824.953	0.047
	-20	5744.988	0.012	5824.977	0.023
	-10	5744.964	0.036	5825.036	-0.036
	0	5745.054	-0.054	5825.051	-0.051
	10	5744.949	0.051	5825.026	-0.026
	20	5745.022	-0.022	5824.955	0.045
	30	5744.963	0.037	5825.027	-0.027
	40	5744.987	0.013	5825.032	-0.032
	50	5745.037	-0.037	5825.019	-0.019

4.9. ANTENNA REQUIREMENT

Standard Applicable
For intentional device, according to FCC 47 CFR Section 15.203, an intentional radiator shall be designed to ensure that no antenna other than that furnished by the responsible party shall be used with the device.

Refer to statement below for compliance.
The manufacturer may design the unit so that the user can replace a broken antenna, but the use of a standard antenna jack or electrical connector is prohibited. Further, this requirement does not apply to intentional radiators that must be professionally installed.

Antenna Connected Construction
The antenna used in this product is a Internal antenna, The directional gains of antenna used for transmitting is 3dBi.

WIFI ANTENNA

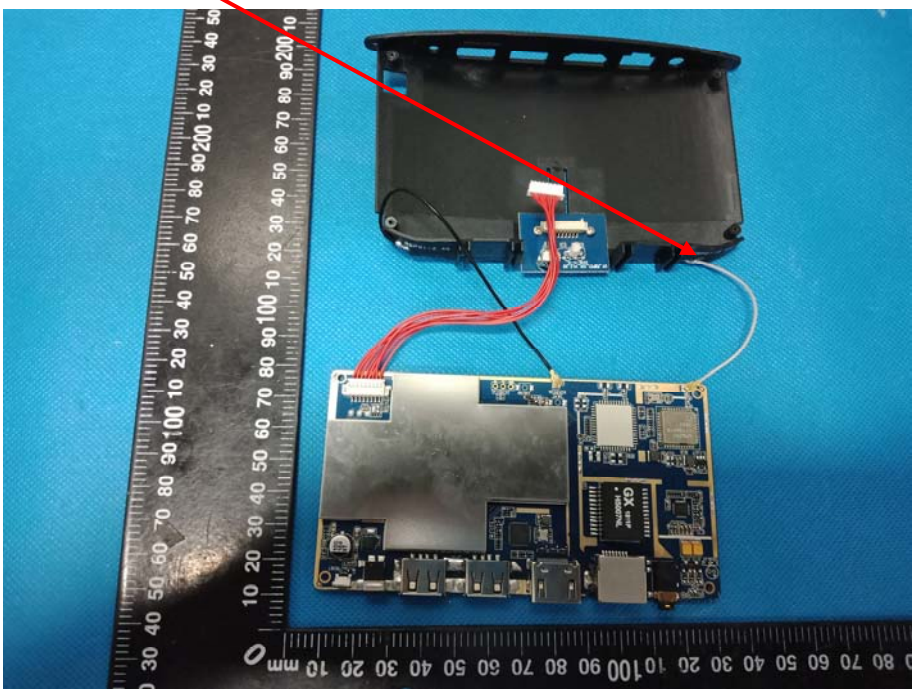

4.10. Photographs of Test Setup

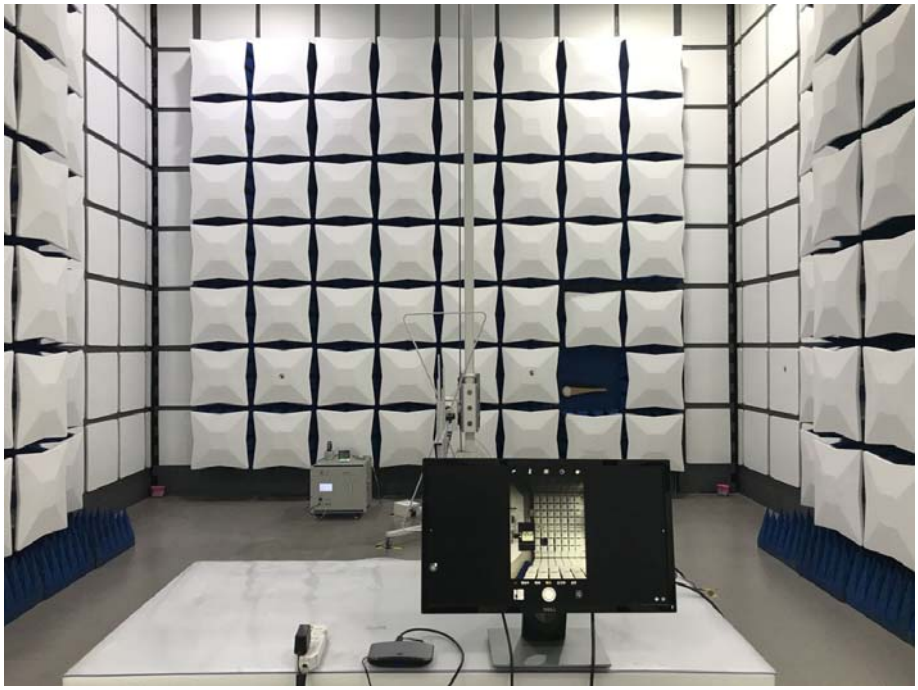

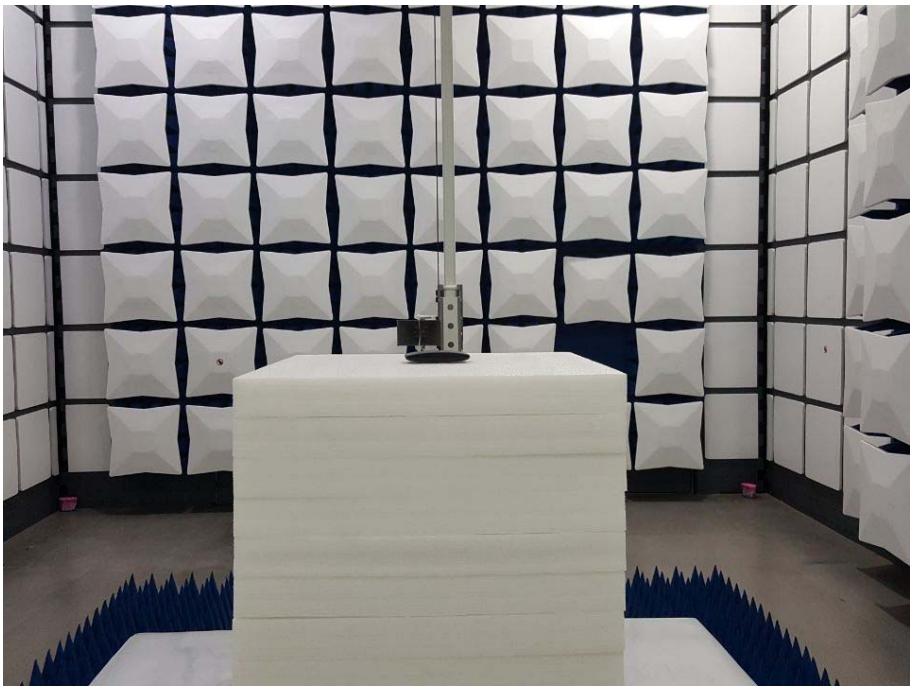

16:50

4.11. PHOTOS OF THE EUT

Reference to the reporter : ANNEX A of external photos and ANNEX B of internal photos

---------End of test report---------