RADIO TEST REPORT

FCC ID:2AWCB-KT-W01A

Product Designation	:	Mia Baby sound machine
Trade mark	:	N/A
Model Name	:	KT-W01A
Applicant	:	SHENZHENSHI KAIXIN GUANGDIAN CO.,LTD
Date of Issue	:	May. 12, 2020
Standard(s)	:	FCC Part 15.247
Report No	:	DGE200413005D

Prepared for

SHENZHENSHI KAIXIN GUANGDIAN CO.,LTD

Software Building, No. 9 Gaoxin Zhong Yi Road, High-Tech Park, Nanshan district, Shenzhen City ,Guangdong Provice,P.R.China

Prepared by

Shenzhen NTEK Testing Technology Co., Ltd.

1/F, Building E, Fenda Science Park, Sanwei Community,
Xixiang Street Bao'an District, Shenzhen P.R. China
Tel.: +86-755-6115 9388
Fax.: +86-755-6115 6599
Website:http://www.ntek.org.cn

TABLE OF CONTENTS

1. TEST RESULT CERTIFICATION.....5

2. SUMMARY OF TEST RESULTS.....6

3.FACILITIES AND ACCREDITATIONS.....6

3.1. FACILITIES.....6
3.2.LABORATORY ACCREDITATIONS AND LISTINGS.....6
3.3.MEASUREMENT UNCERTAINTY.....7

4.GENERAL DESCRIPTION OF EUT.....8

4.1. PRODUCT DESCRIPTION.....8
4.2. TABLE OF CARRIER FREQUENCYS.....8
4.3. IEEE 802.11N MODULATION SCHEME.....9
4.4. TEST METHODOLOGY.....9
4.6. SPECIAL ACCESSORIES.....9
4.7. EQUIPMENT MODIFICATIONS.....9

5. DESCRIPTION OF TEST MODES.....10

6. SYSTEM TEST CONFIGURATION.....11

6.1. CONFIGURATION OF EUT SYSTEM.....11
6.2. EQUIPMENT USED IN EUT SYSTEM.....11

6. TEST FACILITY.....12

7. OUTPUT POWER.....14

7.1. MEASUREMENT PROCEDURE.....14
7.2. TEST SET-UP (BLOCK DIAGRAM OF CONFIGURATION).....14
7.3. LIMITS AND MEASUREMENT RESULT.....15

8. 6 DB BANDWIDTH.....17

8.1. MEASUREMENT PROCEDURE....17
8.2. TEST SET-UP (BLOCK DIAGRAM OF CONFIGURATION)....17
8.3. LIMITS AND MEASUREMENT RESULTS....18

9. CONDUCTED SPURIOUS EMISSION....22

9.1. MEASUREMENT PROCEDURE....22
9.2. TEST SET-UP (BLOCK DIAGRAM OF CONFIGURATION)....22
9.3. MEASUREMENT EQUIPMENT USEDJN....22
9.4. LIMITS AND MEASUREMENT RESULT....22

10. MAXIMUM CONDUCTED OUTPUT POWER SPECTRAL DENSITY....31

10.1 MEASUREMENT PROCEDURE....31
10.2 TEST SET-UP (BLOCK DIAGRAM OF CONFIGURATION)....31
10.3 MEASUREMENT EQUIPMENT USED....31
10.4 LIMITS AND MEASUREMENT RESULT....31

11. RADIATED EMISSION....35

11.1. MEASUREMENT PROCEDURE....35
11.2. TEST SETUP....36
11.3. LIMITS AND MEASUREMENT RESULT....37
11.4. TEST RESULT....37

12. BAND EDGE EMISSION....43

12.1. MEASUREMENT PROCEDURE....43
12.2. TEST SET-UP....43
12.3. TEST RESULT....44

13. FCC LINE CONDUCTED EMISSION TEST....60

13.1. LIMITS OF LINE CONDUCTED EMISSION TEST....60
13.2. BLOCK DIAGRAM OF TEST SETUP....60
13.3. PROCEDURE OF LINE CONDUCTED EMISSION TEST....61
13.4. TEST RESULT OF LINE CONDUCTED EMISSION TEST....62

14.DUTY CYCLE....64

14.1.APPLICABLE STANDARD....64

14.2.CONFORMANCE LIMIT 64
14.3.MEASURING INSTRUMENTS 64
14.4.TEST SETUP 64
14.5.TEST PROCEDURE 64
14.6.TEST RESULTS 65

15.ANTENNA APPLICATION 66

15.1ANTENNA REQUIREMENT 66
15.2RESULT 66

Revision History

Report No.	Version	Description	Issued Date
DGE200413005D	Rev.01	Initial issue of report	May 16, 2020

1. TEST RESULT CERTIFICATION

Applicant's name.....:	SHENZHENSHI KAIXIN GUANGDIAN CO.,LTD
Address..... :	Software Building, No. 9 Gaoxin Zhong Yi Road, High-Tech Park, Nanshan district, Shenzhen City ,Guangdong Provice,P.R.China
Manufacturer's Name.....:	SHENZHENSHI KAIXIN GUANGDIAN CO.,LTD
Address..... :	Software Building, No. 9 Gaoxin Zhong Yi Road, High-Tech Park, Nanshan district, Shenzhen City ,Guangdong Provice,P.R.China
Product description	
Product name.....:	Mia Baby sound machine
Trademark .....:	N/A
Model and/or type reference ....:	KT-W01A
Serial Model.....:	N/A
Difference Description.....:	N/A
Standards..... :	FCC Part 15.247

This device described above has been tested by Shenzhen NTEK Testing Technology Co., Ltd., and the test results show that the equipment under test (EUT) is in compliance with the FCC requirements.And it is applicable only to the tested sample identified in the report.
This report shall not be reproduced except in full, without the written approval of Shenzhen NTEK Testing Technology Co., Ltd., this document may be altered or revised by Shenzhen NTEK Testing Technology Co., Ltd., personnel only, and shall be noted in the revision of the document.
The test results of this report relate only to the tested sample identified in this repor.

Date of Test : 15 Apr. 2020 ~ 12 May. 2020

Testing Engineer : Estelle. Chen

(Estelle Chen)

Technical Manager : Murphy. Chen

(Murphy Chen)

Authorized Signatory : Wetow Huang

(Wetow Huang)

2. SUMMARY OF TEST RESULTS

FCC RULES	DESCRIPTION OF TEST	RESULT
§15.247	Output Power	Compliant
§15.247	6 dB Bandwidth	Compliant
§15.247	Conducted Spurious Emission	Compliant
§15.247	Maximum Conducted Output Power SPECTRAL Density	Compliant
§15.209	Radiated Emission	Compliant
§15.247	Band Edges	Compliant
§15.207	Line Conduction Emission	Compliant
§15.203	Antenna Requirement	Compliant

3.FACILITIES AND ACCREDITATIONS

3.1. FACILITIES

All measurement facilities used to collect the measurement data are located at

1/F, Building E, Fenda Science Park, Sanwei Community, Xixiang Street Bao'an District, Shenzhen 518126 P.R. China

The sites are constructed in conformance with the requirements of ANSI C63.7, ANSI C63.10 and CISPR Publication 22.

3.2.LABORATORY ACCREDITATIONS AND LISTINGS

Site Description		
EMC Lab	:	Accredited by CNAS, 2014.09.04 The Laboratory has been assessed and proved to be in compliance with CNAS-CL01:2006 (identical to ISO/IEC 17025:2005) The Certificate Registration Number is L5516. Accredited by FCC, September 6, 2013 The Certificate Registration Number is 238937.
	:	Accredited by Industry Canada, August 29, 2012 The Certificate Registration Number is 9270A-1.
Name of Firm	:	Shenzhen NTEK Testing Technology Co., Ltd
Site Location	:	1/F, Building E, Fenda Science Park, Sanwei Community, Xixiang Street, Bao'an District, Shenzhen 518126 P.R. China.

3.3.MEASUREMENT UNCERTAINTY

The reported uncertainty of measurement y±U, where expended uncertainty U is based on a standard uncertainty multiplied by a coverage factor of k=2, providing a level of confidence of approximately 95 %.

No.	Item	Uncertainty
1	Conducted Emission Test	±1.38dB
2	RF power, conducted	±0.16dB
3	Spurious emissions, conducted	±0.21dB
4	All emissions, radiated(<1G)	±4.68dB
5	All emissions, radiated(>1G)	±4.89dB
6	Temperature	±0.5°C
7	Humidity	±2%

4.GENERAL DESCRIPTION OF EUT

4.1. PRODUCT DESCRIPTION

The EUT is designed as “White noise WIFI edition”. It is designed by way of utilizing the DSSS and OFDM technology to achieve the system operation.

A major technical description of EUT is described as following

Operation Frequency	2.412 GHz ~ 2.462GHz
Output Power(Average)	IEEE 802.11b:14.81dBm; IEEE 802.11g:12.11dBm; IEEE 802.11n(20):10.96dBm; IEEE 802.11n(40):11.22dBm
Modulation	DSSS(DBPSK/DQPSK/CCK);OFDM(BPSK/QPSK/16-QAM/64-QAM)
Number of channels	11
Hardware Version	V1.0
Software Version	V1.0
Antenna Designation	PCB antenna
Antenna Gain	2.0dBi
Power Supply	Input:AC100V~240V 50/60Hz 0.2A;Output:DC 5V 1500mA by adapter

4.2. TABLE OF CARRIER FREQUENCYS

Frequency Band	Channel Number	Frequency
2400~2483.5MHZ	1	2412 MHZ
	2	2417 MHZ
	3	2422 MHZ
	4	2427 MHZ
	5	2432 MHZ
	6	2437 MHZ
	7	2442 MHZ
	8	2447 MHZ
	9	2452 MHZ
	10	2457 MHZ
	11	2462 MHZ

Note: For 20MHZ bandwidth system use Channel 1 to Channel 11, For 40MHZ bandwidth system use Channel 3 to Channel 9

4.3. IEEE 802.11N MODULATION SCHEME

MCS Index	Nss	Modulation	R	NBPSC	NCBPS		NDBPS		Data rate(Mbps) 800nsGI	
					20MHz	40MHz	20MHz	40MHz	20MHz	40MHz
0	1	BPSK	1/2	1	52	108	26	54	6.5	13.5
1	1	QPSK	1/2	2	104	216	52	108	13.0	27.0
2	1	QPSK	3/4	2	104	216	78	162	19.5	40.5
3	1	16-QAM	1/2	4	208	432	104	216	26.0	54.0
4	1	16-QAM	3/4	4	208	432	156	324	39.0	81.0
5	1	64-QAM	2/3	6	312	648	208	432	52.0	108.0
6	1	64-QAM	3/4	6	312	648	234	489	58.5	121.5
7	1	64-QAM	5/6	6	312	648	260	540	65.0	135.0

Symbol	Explanation
NSS	Number of spatial streams
R	Code rate
NBPSC	Number of coded bits per single carrier
NCBPS	Number of coded bits per symbol
NDBPS	Number of data bits per symbol
GI	Guard interval

4.4. TEST METHODOLOGY

Both conducted and radiated testing was performed according to the procedures in ANSI C63.10 (2013).
Radiated testing was performed at an antenna to EUT distance 3 meters.

4.6. SPECIAL ACCESSORIES

Refer to section 6.2.

4.7. EQUIPMENT MODIFICATIONS

Not available for this EUT intended for grant.

5. DESCRIPTION OF TEST MODES

NO.	TEST MODE DESCRIPTION
1	Low channel TX
2	Middle channel TX
3	High channel TX
4	Normal operating

Note:
Transmit by 802.11b with Date rate (1/2/5.5/11)
Transmit by 802.11g with Date rate (6/9/12/18/24/36/48/54)
Transmit by 802.11n (20MHz) with Date rate (6.5/13/19.5/26/39/52/58.5/65)
Transmit by 802.11n (40MHz) with Date rate (13.5/27/40.5/54/81/108/121.5/135)

Note:

1. The EUT has been set to operate continuously on the lowest, middle and highest operation frequency Individually, and the eut is operating at its maximum duty cycle>or equal 98%
2. All modes under which configure applicable have been tested and the worst mode test data recording in the test report, if no other mode data.
3. For Conducted Test method, a temporary antenna connector is provided by the manufacture.

6. SYSTEM TEST CONFIGURATION

6.1. CONFIGURATION OF EUT SYSTEM

For AC Conducted Emission Mode

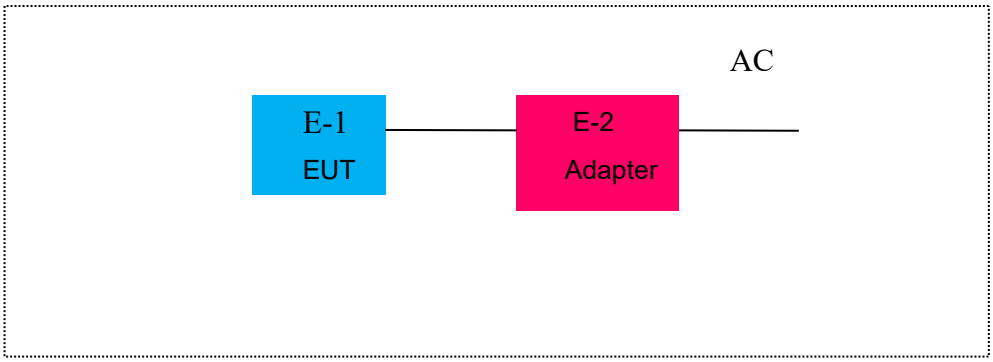

For Radiated Test Cases

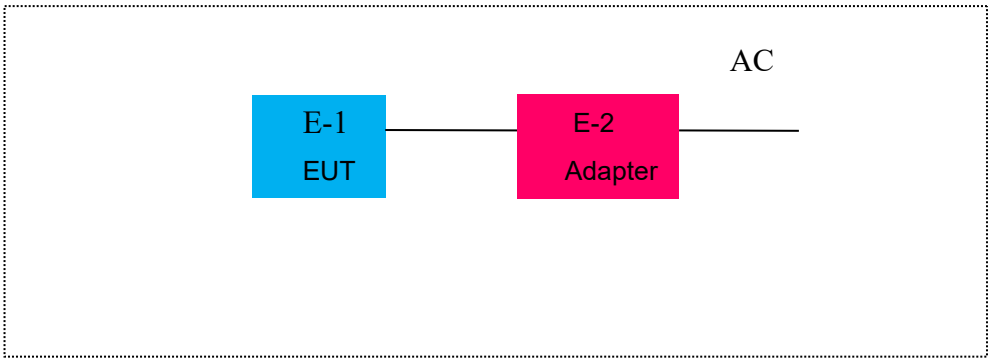

6.2. EQUIPMENT USED IN EUT SYSTEM

Item	Equipment	Model No.	ID or Specification	Remark
1	Mia Baby sound machine	KT-W01A	FCC ID:2AWCB-KT-W01A	EUT
2	Adapter	SR-C50501500U1	Input:AC100V~240V 50/60Hz 0.2A;Output:DC 5V 1500mA	Accessories

6. TEST FACILITY

Radiation Test equipment

Item	Kind of Equipment	Manufacturer	Type No.	Serial No.	Last calibration	Calibrated until	Calibration period
1	Spectrum Analyzer	Agilent	E4407B	MY45108040	2019.07.06	2020.07.05	1 year
2	Spectrum Analyzer	Agilent	N9020A	MY49100060	2019.11.19	2020.11.18	1 year
3	Test Receiver	R&S	ESPI	101318	2019.06.07	2020.06.06	1 year
4	Bilog Antenna	TESEQ	CBL6111D	31216	2019.07.06	2020.07.05	1 year
5	50Ω Coaxial Switch	Anritsu	MP59B	6200264416	2019.06.07	2020.06.06	1 year
7	Horn Antenna	EM	EM-AH-10180	2011071402	2019.07.06	2020.07.05	1 year
8	Horn Ant	Schwarzbeck	BBHA 9170	9170-181	2019.07.06	2020.07.05	1 year
9	Pre-Amplifier	EMC	EMC051835 SE	980246	2019.08.09	2020.08.09	1 year
10	Loop Antenna	ARA	PLA-1030/B	1029	2019.06.08	2020.06.07	1 year
11	Test Cable (9KHz-30MHz)	N/A	R-04	N/A	2019.06.06	2020.06.05	1 year
12	Test Cable (30MHz-1GHz)	N/A	R-01	N/A	2019.07.06	2020.07.05	1 year
13	Test Cable (1-18GHz)	N/A	R-02	N/A	2019.07.06	2020.07.05	1 year
14	High Test Cable(18G-40 GHz)	N/A	R-03	N/A	2019.06.06	2020.06.05	1 year
15	temporary antenna connector (Note)	NTS	R001	N/A	N/A	N/A	N/A

Note:

We will use the temporary antenna connector (soldered on the PCB board) When conducted test

And this temporary antenna connector is listed within the instrument list.

Conduction Test equipment

Item	Kind of Equipment	Manufacturer	Type No.	Serial No.	Last calibration	Calibrated until	Calibration period
1	Test Receiver	R&S	ESCI	101160	2019.06.06	2020.06.05	1 year
2	LISN	R&S	ENV216	101313	2019.08.24	2020.08.23	1 year
3	LISN	EMCO	3816/2	00042990	2019.08.24	2020.08.23	1 year
4	50Ω Coaxial Switch	Anritsu	MP59B	6200264417	2019.06.07	2020.06.06	1 year
7	Test Cable (9KHz-30MHz)	N/A	C01	N/A	2019.06.08	2020.06.07	1 year
8	Test Cable (9KHz-30MHz)	N/A	C02	N/A	2019.06.08	2020.06.07	1 year
9	Test Cable (9KHz-30MHz)	N/A	C03	N/A	2019.06.08	2020.06.07	1 year

Note: Each piece of equipment is scheduled for calibration once a year.

7. OUTPUT POWER

7.1. MEASUREMENT PROCEDURE

For average power test:

1. Connect EUT RF output port to power sensor through an RF attenuator.
2. Connect the power sensor to the PC.
3. Set the EUT Work on Low channel, Medium channel and High channel respectively.
4. Record the maximum power from the software.

Note： The EUT was tested according to ANSI C63.10 (2013) for compliance to FCC 47CFR 15.247 requirements.

7.2. TEST SET-UP (BLOCK DIAGRAM OF CONFIGURATION)

AVERAGE POWER SETUP

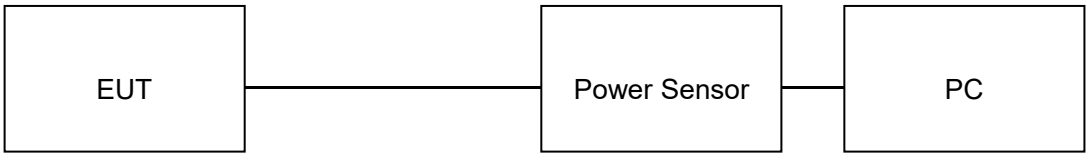

7.3. LIMITS AND MEASUREMENT RESULT

TEST ITEM	OUTPUT POWER
TEST MODE	802.11b with data rate 1

Frequency (GHz)	Average Power (dBm)	Applicable Limits (dBm)	Pass or Fail
2.412	14.64	30	Pass
2.437	**14.81**	30	Pass
2.462	14.27	30	Pass

TEST ITEM	OUTPUT POWER
TEST MODE	802.11g with data rate 6

Frequency (GHz)	Average Power (dBm)	Applicable Limits (dBm)	Pass or Fail
2.412	11.91	30	Pass
2.437	**12.11**	30	Pass
2.462	11.05	30	Pass

TEST ITEM	OUTPUT POWER
TEST MODE	802.11n 20 with data rate 6.5

Frequency (GHz)	Average Power (dBm)	Applicable Limits (dBm)	Pass or Fail
2.412	10.83	30	Pass
2.437	**10.96**	30	Pass
2.462	10.38	30	Pass

TEST ITEM	OUTPUT POWER
TEST MODE	802.11n 40 with data rate 13.5

Frequency (GHz)	Average Power (dBm)	Applicable Limits (dBm)	Pass or Fail
2.422	10.75	30	Pass
2.437	11.22	30	Pass
2.452	10.83	30	Pass

8. 6 DB BANDWIDTH

8.1. MEASUREMENT PROCEDURE

1. Connect EUT RF output port to the Spectrum Analyzer through an RF attenuator
2. Set the EUT Work on Low channel, Medium channel and High channel respectively.
3. Set SPA Centre Frequency = Operation Frequency, RBW= 100 KHz, VBW⩾3×RBW.
4. Set SPA Trace 1 Max hold, then View.

Note: The EUT was tested according to ANSI C63.10 (2013) for compliance to FCC 47CFR 15.247 requirements.

8.2. TEST SET-UP (BLOCK DIAGRAM OF CONFIGURATION)

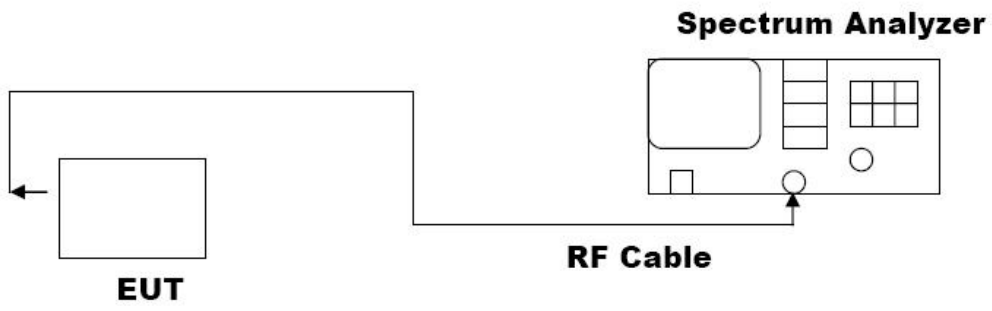

8.3. LIMITS AND MEASUREMENT RESULTS

TEST ITEM	6DB BANDWIDTH
TEST MODE	802.11b with data rate 11

LIMITS AND MEASUREMENT RESULT			
Applicable Limits	Applicable Limits		
	Channel	6DB BANDWIDTH (MHz)	Criteria
>500KHZ	Low Channel	8.578	PASS
	Middle Channel	9.010	PASS
	High Channel	9.037	PASS

TEST ITEM	6DB BANDWIDTH
TEST MODE	802.11g with data rate 54

LIMITS AND MEASUREMENT RESULT			
Applicable Limits	Applicable Limits		
	Channel	6DB BANDWIDTH (MHz)	Criteria
>500KHZ	Low Channel	16.36	PASS
	Middle Channel	16.38	PASS
	High Channel	16.36	PASS

TEST ITEM	6DB BANDWIDTH
TEST MODE	802.11n 20 with data rate 65

LIMITS AND MEASUREMENT RESULT			
Applicable Limits	Applicable Limits		
	Channel	6DB BANDWIDTH (MHz)	Criteria
>500KHZ	Low Channel	17.32	PASS
	Middle Channel	17.33	PASS
	High Channel	17.55	PASS

TEST ITEM	6DB BANDWIDTH
TEST MODE	802.11n 40 with data rate 135

LIMITS AND MEASUREMENT RESULT			
Applicable Limits	Applicable Limits		
	Channel	6DB BANDWIDTH (MHz)	Criteria
>500KHZ	Low Channel	35.73	PASS
	Middle Channel	35.72	PASS
	High Channel	35.91	PASS

Test Plot

6dB Bandwidth plot on Low channel (802.11b)

6dB Bandwidth plot on Middle channel (802.11g)

6dB Bandwidth plot on Middle channel (802.11b)

6dB Bandwidth plot on Middle channel (802.11g)

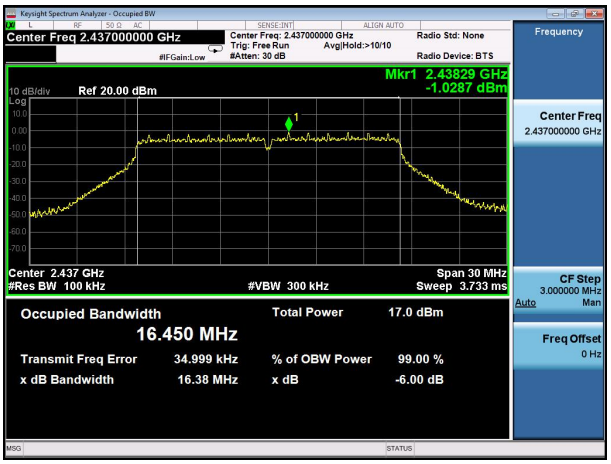

6dB Bandwidth plot on High channel (802.11b)

6dB Bandwidth plot on High channel (802.11g)

6dB Bandwidth plot on Low channel (802.11n20)

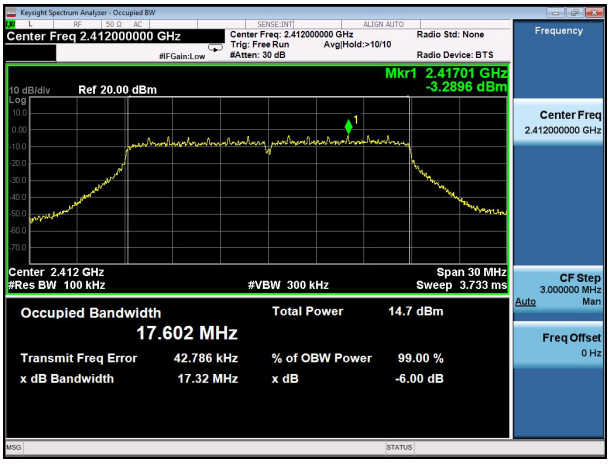

6dB Bandwidth plot on Middle channel (802.11n40)

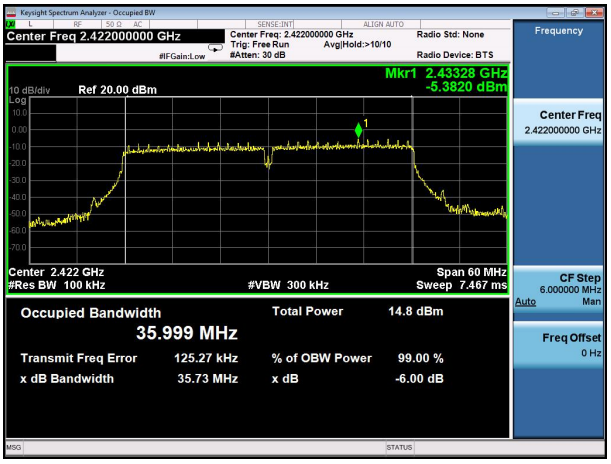

6dB Bandwidth plot on Middle channel (802.11n20)

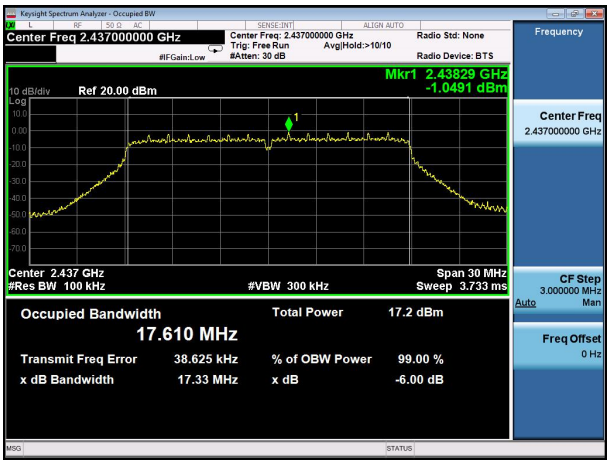

6dB Bandwidth plot on Middle channel (802.11n40)

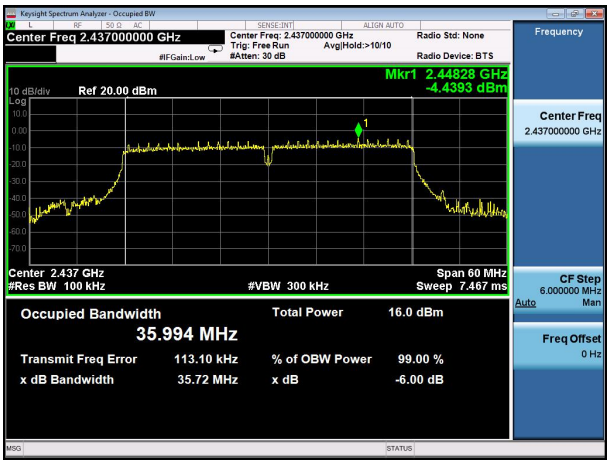
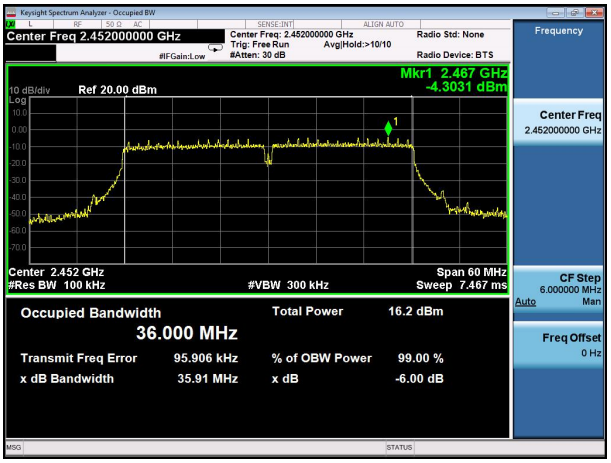
6dB Bandwidth plot on High channel (802.11n20)	6dB Bandwidth plot on High channel (802.11n40)