USA023 项目 23 门蓝牙柜_产品使用说明书

VER3.1

User's Manual for Odin Locker

VER3.1

编　　制：

审　　核：

批　　准：

密　　级：☑公开□内部公开□机密

written by:

reviewed by:

approved by:

confidentiality level:☑public□ internal disclosure□ confidential

法律声明

版权所有©深圳市智莱科技股份有限公司。保留一切权利。

未经深圳市智莱科技股份有限公司书面同意，任何单位和个人不得擅自摘抄，复制手册内容的部分或全部，并不得以任何形式传播。

本说明书描述的产品中，可能包含深圳市智莱科技股份有限公司及其可能存在的许可人享有版权的软件。除非获得相关权利人的许可，否则，任何人不能以任何形式对前述软件进行复制，分发，修改，摘录，反编译，反汇编，解密，反向工程，出租，转让，分许可等侵犯软件版权的行为，但是适用法律禁止使用此类限制的除外。

Declaration

© Shenzhen Zhilai Sci and Tech Co., Ltd. All rights reserved.

Without the written consent of Shenzhen Zhilai Sci and Tech Co., Ltd., no unit or individual may arbitrarily excerpt and copy part or all of the contents of the manual, and it may not be transmitted in any form.

The products described in this manual may include software that Shenzhen Zhilai Sci and Tech Co., Ltd. or its possible licensors own copyright of. No one may copy, distribute, modify, extract, decompile, disassemble, decrypt, reverse engineering, rent, transfer, sublicense, etc. the software in any form, except with the permission of the relevant right holder and where applicable law prohibits the use of such restrictions.

目录 Contents

1 简介 INTRODUCTION ..... - 4 -

2 结构信息 STRUCTURAL INFORMATION ..... - 4 -

3 技术特性 TECHNICAL CHARACTERISTICS ..... - 9 -

4 整柜安装 LOCKER INSTALLATION ..... - 10 -

5 使用及操作 APPLICATION AND OPERATION ..... - 17 -

6 故障分析及注意事项 FAILURE ANALYSIS AND NOTES ..... - 24 -

6.1 电源故障 POWER FAILURE ..... - 24 -

6.2 通信故障 COMMUNICATION FAILURE ..... - 24 -

6.3 注意事项 NOTES ..... - 25 -

7 认证警示说明 CERTIFICATION WARNINGS ..... - 26 -

8 其他 OTHERS ..... - 28 -

8.1 免费保修服务计划 FREE WARRANTY SERVICE ..... - 28 -

8.2 保修期满后，付费维修服务收费标准 STANDARD OF PAID MAINTENANCE SERVICES AFTER WARRANTY PERIOD ..... - 30 -

8.3 服务承诺 SERVICE COMMITMENT ..... - 30 -

8.4 联系方式 CONTACT INFORMATION ..... - 31 -

USA023 项目 23 门蓝牙柜_产品使用说明书

User's Manual for Odin Locker

1 简介 Introduction

应 USA023 客户需求，需要开发一款蓝牙通信的 23 门蓝牙柜。采用电池包及电源管理板、蓝牙核心板、蓝牙扩展板、光耦条、ZL22A 电机锁、IOT 天线、IOT 模块、蓝牙天线、微动开关、振动电机、喇叭等设备,开发智能快递柜的软、硬件系统；设计需求以蓝牙存物、取物功能。采用 6V 电池包供电。

To meet USA023 client's requirements, the 23-door Bluetooth locker communicated through Bluetooth should be developed, which adopts the devices such as battery packages, power management board, Bluetooth core board, Bluetooth expansion board, presence sensor strip, ZL22A motor lock, IOT antenna, Bluetooth antenna, micro switch, vibration motor and speaker. The software and hardware system of intelligent parcel locker should be developed. The Bluetooth deposit and pick-up function should be designed. It is powered by the 6V battery package.

2 结构信息 Structural Information

此次设计为

The structure design is as follows:

1) 户外柜，无雨棚，无 LED 灯，柜体整体在结构方面需满足防水、防虫的要求，防水等级要求暂未定

It is an outdoor locker without roof and LED light. The whole structure of the locker should meet the requirements of waterproof and insect-proof. The requirements for ingress protection are not yet determined.

2) 柜顶前高后低，倾斜 1.5°，防止积水造成顶板腐蚀

The front of the locker top is higher than the back with a tilt angle of 1.5° to prevent corrosion of the top board caused by water accumulation.

3) 柜体无需左右过线口和电源进线口

The locker doesn't require cable-runs entrance on the left and right and and power cable entrance.

4) 上下应急盖板防撬拉力为 600Kg

The anti-prying force of the upper and lower front cover is 600Kg.

5) 柜体采取靠墙方式安装或者室外露天安装

The locker is installed against the wall or outdoors.

6) 柜体采用蓝色橘纹及墨鱼灰橘纹喷涂效果

The locker is sprayed by blue shrivel finish and gray shrivel finish.

7) 最上方格口两个格口的包裹重量不超过 4.5kg

The parcel in the top two slots can't exceed 4.5kg.

8) 地脚最高能调整的高度（离地面高度）为 65mm

The maximum adjustable height between the anchor and the ground is 65mm.

9) 整柜的背封板增加至少 5kg 的配重，具体位置和参数如下：

Add at least 5kg weight to the back sealing plate. The specific location and parameters are as follows:

①配重块加工之后重量为 5kg,具体尺寸为：360mm*60mm*30mm(S45C)

The block is 5 kg after processed, and its specific dimension is: 360mm*60mm*30mm(S45C).

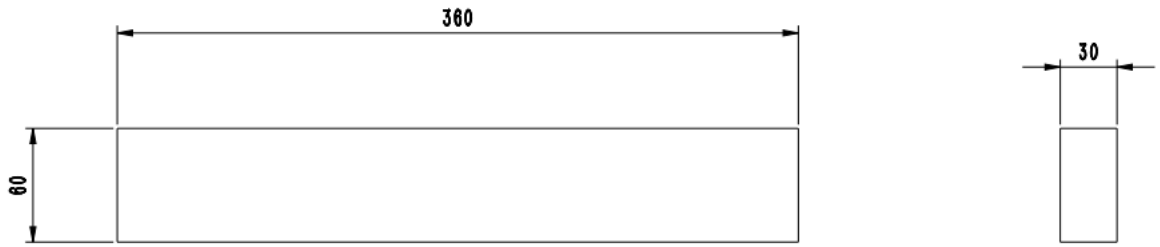

②配重块下端面距离机柜底板 200mm，如下图所示：

The lower end of the block is 200mm away from the locker bottom, as shown below:

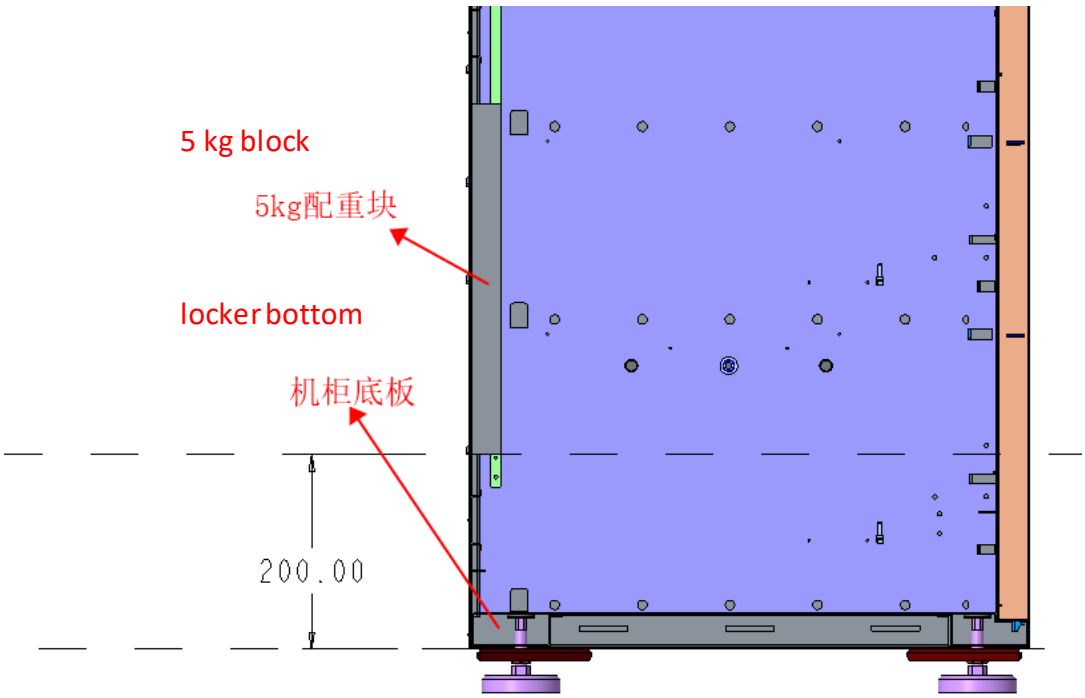

基本部分 basic part	具体参数 specific parameters
材料 materials	镀锌板\不锈钢 +电泳　料厚：0.8/1.0/1.5/2.0 zinc coated steel \stainless steel + electrophoresis material thickness: 0.8/1.0/1.2/1.5/2.0 mm
箱柜厚度（箱门） thickness of door	镀锌板+电泳　料厚：2.0 zinc coated steel + electrophoresis material thickness: 2.0mm
箱柜厚度（其他柜体） thickness of other parts	镀锌板+电泳　料厚：1.5 zinc coated steel + electrophoresis

	material thickness: 1.5mm
整柜尺寸 dimensions of the whole locker	931.4mm*575mm*1985.5mm（W*D*H）
外框尺寸 frame dimensions of slot	超大箱：414mm*575mm*488mm（W*D*H） extra large slot: 414mm*575mm*488mm（W*D*H）
	大箱：414mm*575mm*290mm（W*D*H） large slot: 414mm*575mm*290mm（W*D*H）
	中箱：414mm*575mm*195mm（W*D*H） medium slot: 414mm*575mm*195mm（W*D*H）
	小箱：414mm*575mm*112.5mm（W*D*H） small slot: 414mm*575mm*112.5mm（W*D*H）
	超小箱：414mm*575mm*65mm（W*D*H） extra small slot: 414mm*575mm*65mm（W*D*H）
净空间尺寸 net space dimensions of slot	超大箱：350mm*551mm*473mm（W*D*H） extra large slot: 350mm*551mm*473mm（W*D*H）
	大箱：350mm*551mm*275mm（W*D*H） large slot: 350mm*551mm*275mm（W*D*H）
	中箱：350mm*551mm*180mm（W*D*H） medium box: 350mm*551mm*180mm（W*D*H）
	小箱：350mm*551mm*97.5mm（W*D*H） small slot: 350mm*551mm*97.5mm（W*D*H）
	超小箱：343mm*305mm*50mm（W*D*H） extra small slot: 343mm*305mm*50mm（W*D*H）

柜型图如下 The locker diagram is shown as follows：

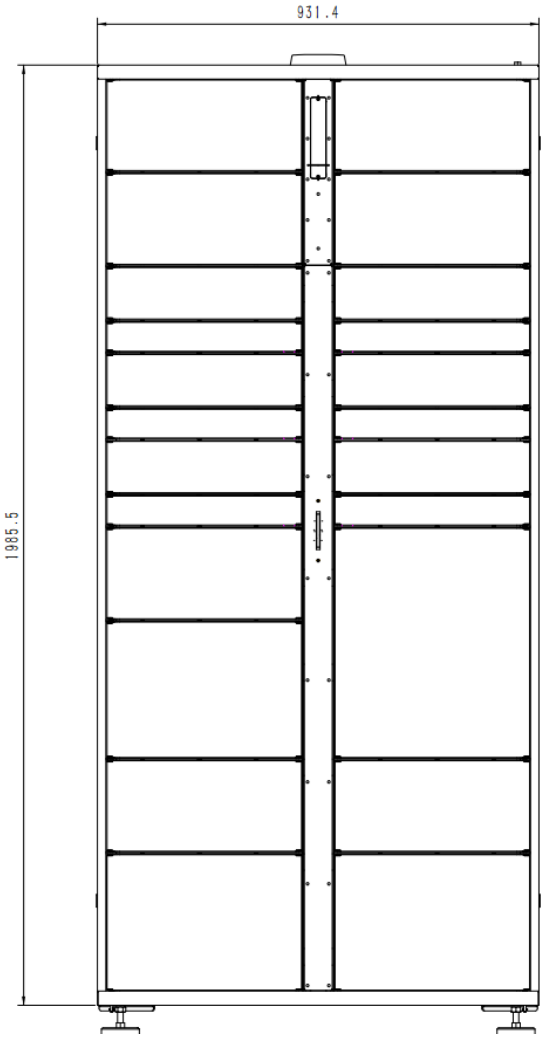

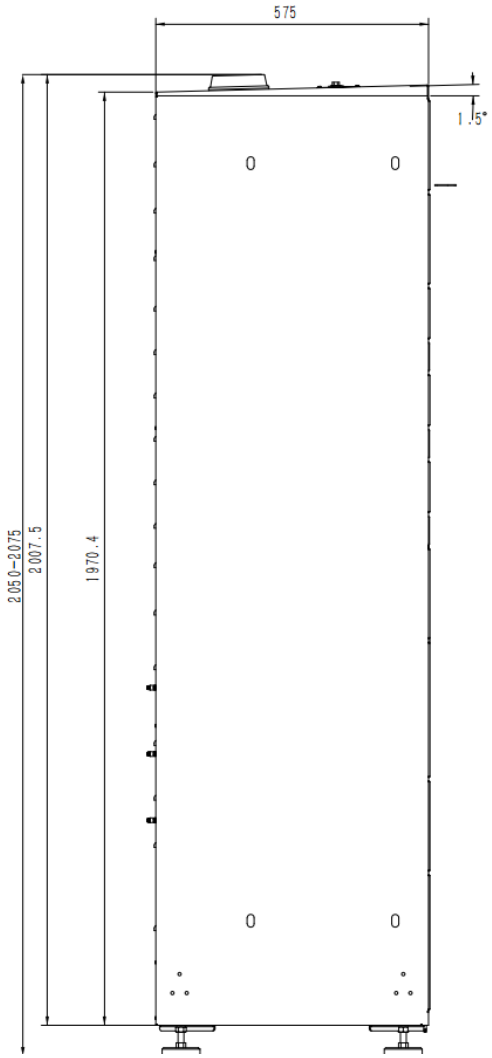

3 技术特性 Technical Characteristics

项目 item		规格 specification	备注 remarks
环境 ambi	工作环境温度 working ambient temperature	-20~55℃	

ent	存储环境温度 storing ambient temperature	-20~60℃	
	工作环境湿度 working ambient humidity	10%~85%RH，无冷凝 10% ~ 85% RH, no condensation	
输入电压范围 input voltage range		6VDC	
额定功率 rated power		9W	

4 整柜安装 Locker Installation

准备工具 tools：

编号 SN	名称 name	用途 application
1	老虎钳或尖嘴钳 pincer pliers or needle-nose pliers	用于拆卸外部包装（铁条和木箱） to remove external packaging (iron bars and wooden boxes)
2	地脚扳手 anchor wrench	用于调节地脚 to adjust the anchor
3	电钻 electric drill	用于安装固定块 to install the wall bracket
4	十字螺丝刀	用于内部固定配件螺丝

	cross screwdriver	to fix the screws of accessories
5	活动扳手 adjustable wrench	用于拧螺母 to tighten the nut
6	美工刀 utility knife	用于拆卸内部包装（纸皮和包装膜） to remove internal packages (paper and packaging film)
7	三角螺丝刀 triangular screwdriver	用于接地线、安装电源、过线孔封堵 to block the earth wire, power supply and cable-runs entrance
8	水平尺 levelling instrument	用于测试柜子安装是否水平 to test whether the locker keeps level
9	锤子 hammer	用于安装膨胀螺丝 to fix the expansion screw
10	记号笔 marker	用于标记固定块安装孔位 to mark the installation hole position of the wall bracket

安装步骤 installation steps：

1) 拆卸包装 Unpacking

使用尖嘴钳将包装钢带拆卸掉，再使用美工刀将纸皮和气泡膜小心割开拆除。拆钢带时请注意将需要剪断位置的两端抓住，防止钢带剪断后弹起造成误伤，请佩戴手套进行操作。

First remove the outer packaging steel strip with the needle-nosed pliers, and carefully cut off the paper and bubble film with a utility knife. Grab the two ends of the position where you need to cut to prevent injury when disassembling the steel strip. Please wear gloves to operate.

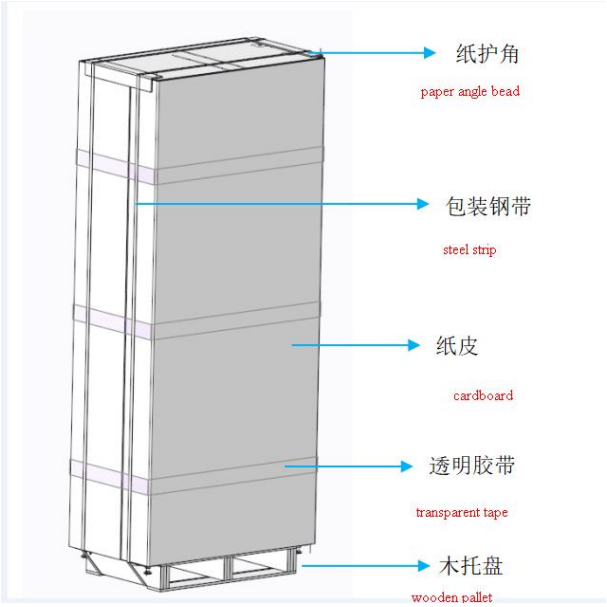

2) 调整地脚 Anchor Adjustment

使用三角螺丝刀取下小应急盖板锁上的挡片，将小应急盖板打开取出，将大应急盖板向上推取出后，打开最下方两个格口。

Use a triangular screwdriver to remove the locking piece of the small front cover. Open the small front cover and take it out, push the large front cover up and take it out, and then open the bottom two slots.

用准备好的地脚扳手通过下图位置（最底下两个格口内部）调节主柜底部的地脚螺母，使前后水平；将水平仪放置在柜门上及柜顶上，调节地脚使 2 个水平仪的气泡在正中间。

Use the prepared anchor wrench to adjust the anchor nut at the bottom of the starter according to the position shown in the figure below (inside the bottom two slots) to keep the front and back level. Place the levelling instrument on the locker door and the locker top, and adjust the anchor so that the bubbles of the two levelling instruments are in the middle.

3) 安装背面固定块 Installation of the Rear Wall Bracket

将最上方两个格口打开，取出背部四个胶粒，先用螺钉和螺母将固定块和固定块 2 安装好，不需要拧紧。

Open the top two slots and take out the four colloidal particles on the back. Install the wall bracket 1 and 2 with screws and nuts without tightening.

将固定块安装在柜子背面，如下图所示。

Install the wall brackets on the back of the locker, as shown in the figure below.

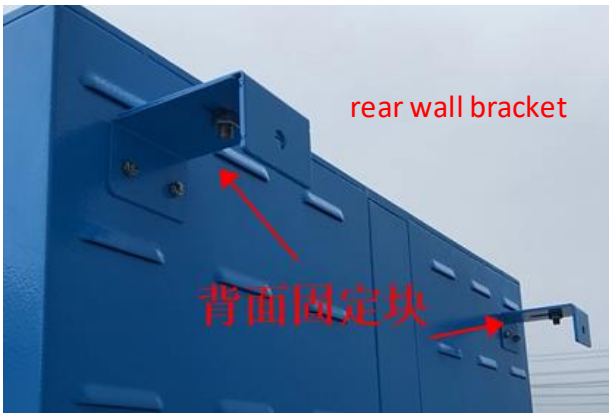

使用记号笔标记背面固定块的靠墙安装孔位，如下图所示。挪开柜子后，使用电钻对标记位置进行打孔，使用锤子将膨胀螺丝打入孔中，并取出膨胀螺丝上的垫片及螺母。将整柜挪至安装位置，膨胀螺丝穿过安装孔，使用活动扳手将取下的垫片及螺母安装上去。

Mark the installation holes of the rear wall bracket by marker, as shown in the figure below. After removing the locker, drill the marked position, hammer the expansion screw into the hole, and remove the washer and nut on the expansion screw. Move the whole locker to the installation position, pass the expansion screw through the hole, and install the removed washer and nut with the adjustable wrench.

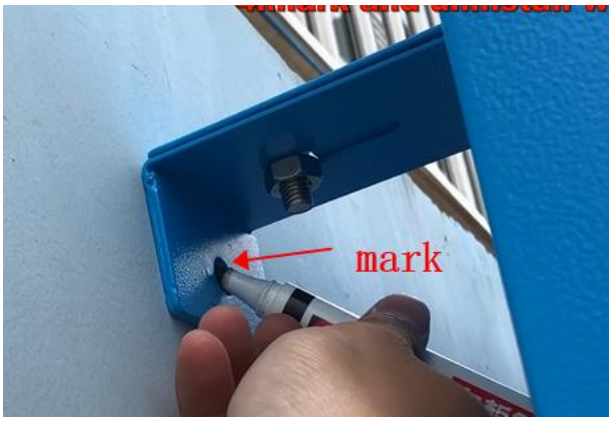

将固定块 1 拆下，使用活动扳手将取下的垫片及螺母安装到墙面上，如下图所示：

Remove the wall bracket 1, and install the removed washer and nut on the wall with the adjustable wrench, as shown in the figure below:

将整柜挪至安装处，使用活动扳手将固定块 1 和固定块 2 安装好即可。

Move the whole locker to the installation position, and install the wall bracket 1 and 2 with an adjustable wrench.

4) 安装地脚固定块 Installation of Anchor Wall Bracket

将地脚固定块放在柜子侧面，对准固定孔，使用记号笔标记固定块底部安装孔的位置，使用电钻对标记位置进行地面打孔，使用锤子将膨胀螺丝打入孔中，并取出膨胀螺丝上的垫片及螺母。将固定块对照安装位固定在柜子侧面，在最下方格口内部对照安装孔安装固定块配件，使用

十字螺丝刀在柜子外部侧面安装螺丝固定，将取下的垫片及螺母安装在固定块上，再使用活动扳手将螺母和膨胀螺丝拧紧。

以下是安装的图片，可供参考：

Place the anchor wall bracket on the locker side and align it with the hole. Mark the position of the installation hole at the bottom of the wall bracket, drill the marked position on the ground, hammer the expansion screw into the hole, and remove the washer and nut on the expansion screw. Fix the wall bracket on the locker side with reference to the installation position, install the accessories of the wall bracket inside the bottom slots with reference to the installation hole, use a cross screwdriver to install the screws on the outer side of the locker, and install the removed washer and nut on the wall bracket , And then use an adjustable wrench to tighten the nut and expansion screw.

The following is the installation figure for reference:

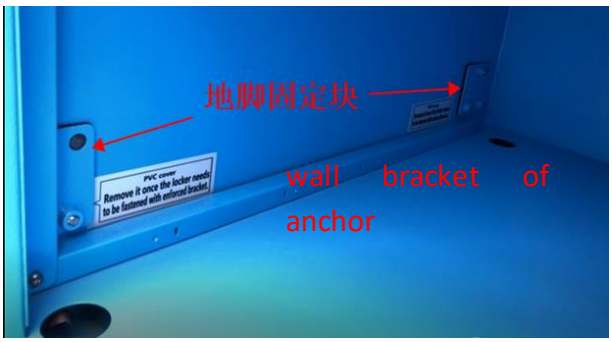

5 使用及操作 Application and Operation

此次提供内部测试软件，与客户的不一致，仅做出厂测试使用。安装 APP 测试软件，登录后，选择厂内出货测试软件（23），搜索蓝牙，连接需要测试的蓝牙柜的蓝牙名称，进入操作界面（蓝牙意外断开后 APP 会进行重新连接，三次重连未果之后需要重新进去）。下图为操作界面示意图。注：

As the test software we provided is inconsistent with the client's, it is only used for factory testing. Install the APP test software at first. After logging in, select the test software of factory shipment (23), search for Bluetooth, connect the Bluetooth name of the Bluetooth locker that needs to be tested, and enter the operation interface (APP will reconnect after Bluetooth accidentally disconnected. Re-enter after three failed re-connections.). The following figure is the schematic diagram of the operation interface.

Note:

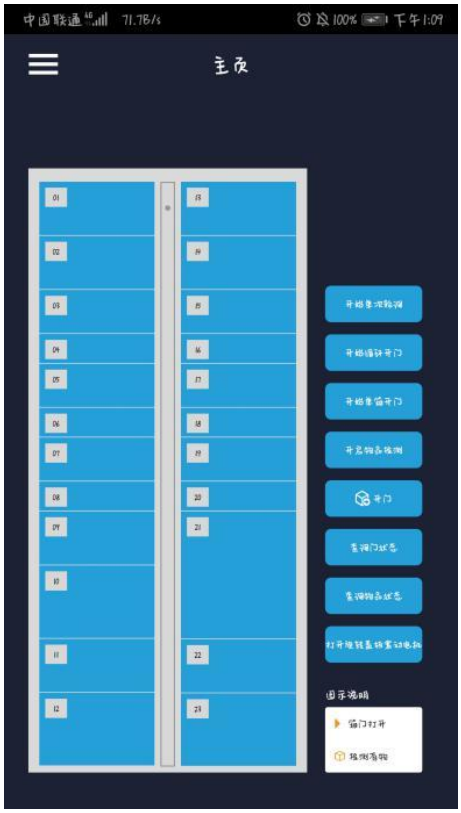

包含的功能有 The functions included are：

1) 开启单次轮询

此功能是为了解决用户手动操作的不便利性，通过程序实现自动轮训开门的功能，具体步骤是：用户点击开始查询按钮后，APP 先向蓝牙模块发送开启 1 号箱箱门的指令，然后隔 1 秒后，再发送查询 1 号箱门磁的状态，再隔 1 秒，发送查询 1 号箱物品状态的指令，然后再去打开 2 号箱……直到查询完最后一个门的物品状态后停止查询。

1) Start a Single Polling

To solve the inconvenience of user's manual operation, this function can automatically open the door by polling. The specific steps are: after the user clicks the "Start Query" button, the APP first sends a command to the Bluetooth module to open the door of No. 1 slot, and then after 1 second, send a command to query the doorsensor status of the No. 1 slot. After another 1 second, send a command to query the item status of the No. 1 slot. And then open the No. 2 slot ... until you finish querying the item status of the last slot.

2) 开始循环开门

从 1 号箱开始，间隔一秒发送一次开门指令（只发开门指令不查状态），开完最后一个箱子后，又从头开始循环，再次点击按钮，停止循环，再循环的过程中是无法执行其他操作的，要想执行其他操作，先停止循环，长按按钮可以查看此功能的详细描述。

2) Start Cyclic Door-Opening

Start from the No. 1 slot, send a door-opening command after 1 second(only send the door-opening command without querying the status). After opening the last slot, start from the beginning. Click the button again to stop the cycle. Other operations cannot be executed during the recycling process. For other operations, stop the cycle and hold down the button to view the details of this function.

3) 开始单箱开门

需要先手动选择一个箱子，然后 APP 会每隔一秒发送一次开门指令（只发开门指令不查状态），只控制当前选择的这个箱子，再次点击按钮，停止发送指令，再执行的过程中是无法执行其他操作的，要想执行其他操作，先停止此操作，长按按钮可以查看此功能的详细描述。

3) Start Opening a Single Slot

Manually select a slot, and then the APP will send a door-opening command after 1 second (only send the door-opening command without querying the status), only control the currently selected slot, click the button again to stop sending commands. Other operations cannot be executed during this process. For other operations, stop the execution and hold down the button to view the details of this function.

4) 开启物品检测

需要先手动选择一个箱子，然后 APP 会每隔一秒发送一次查询物品状态的指令，只查询当前选择的这个箱子，再次点击按钮，停止发送查询指令，再执行的过程中是无法执行其他操作的，要想执行其他操作，先停止此操作，长按按钮可以查看此功能的详细描述。

4) Start Item Detection

Manually select a slot, and then the APP will send a command to query item status after 1 second. Only query the currently selected slot, click the button again to stop sending commands. Other operations cannot be executed during this process. For other operations, stop the execution and hold down the button to view the details of this function.

5) 开门

选择一个箱子后，点击开门按钮，则可以打开此箱门。

5) Open the Door

After selecting a slot, click the "Open" button to open the slot door.

6) 查询门状态

选择一个箱子后，点击查询门状态按钮，APP 会向蓝牙模块获取此箱门的门磁状态，如果门是打开的，右下角会显示白色三角箭头，门是关的，三角箭头隐藏（可以参考右下角图示说明）。

6) Query Door Status

After selecting a slot, click the "Query Door Status" button, and the APP will obtain the doorsersor status of the slot door from the Bluetooth module. If the door is opened, a white triangle arrow will be displayed in the lower right corner. If the door is closed, the triangle arrow will be hidden (illustrated in the lower right corner).

7) 查询物品状态

选择一个箱子后，点击查询物品状态按钮，APP 会向蓝牙模块获取此箱门的物品状态，如果检测到有物品的话，箱门中间会显示一个包裹的图标，没有物品的话图标隐藏（可以参考右下角图示说明）。

7) Query Item Status

After selecting a slot, click the "Query Item Status" button, the APP will obtain the item status of the slot door from the Bluetooth module. If an item is detected, a parcel icon will be displayed in the middle of the slot door. If there is no item, the icon will be hidden (illustrated in the lower corner).

8) 应急盖板微动开关检测

检测应急盖板的开关状态，在 APP 上进行显示。

8) Detection of Micro Switch of Front Cover

Check the switch status of the front cover and display it on the APP.

9) 打开振动电机

9) Turn on the Vibration Motor

如上图所示，设置参数的格式为：震动次数;检测时间;振动时间，振动时间的单位为毫秒。

As shown in the figure above, the format for setting the parameters is: number of vibrations; detection time; vibration time. The unit of vibration time is milliseconds.

10) 中断上报

中断上报是固件那边主动上报状态，有上报的话，每个箱子的箱号旁边会有一个小圆点标识，并且闪烁（呼吸灯效果），闪烁 5 秒后自动消失，没有收到上报状态，默认是没有小圆点标识的。

如果在小圆点还没停止闪烁的时候，又上报了一条信息，则在小圆点后面显示当前上报的次数，如果停止闪烁，次数清零。

10) Interrupt Report

The interrupt report is the status reported by the firmware. If there is a report, there will be a small dot mark next to the number of each slot, and it will flash (the same as breathing light effect). It will disappear automatically after 5 seconds of flashing. If no report status has been received, there is no dot mark by default.

If another message is reported before the dot has not stopped flashing, the current number of reports will be displayed after the dot. If the flashing stops, the number will be cleared.

11) 菜单栏 Menu

点击菜单栏，以下有 8 个模块分别如下：

Click the "Menu", the following 8 modules are as follows:

① Log

可查询到 APP 的所有日志信息，包括版本号、应用名称、手机厂商、手机型号等，日志是以天进行保存，可通过上一天、下一天按钮来进行日志查询，也有清除日志的选项。

You can query all the log information of the APP, including the version number, application name, phone manufacturer, phone model, etc. The log is saved in days, you can query the log by the "Previous

Day" and "Next Day" buttons, and there is an option to clear the log.

② 蓝牙 Bluetooth

通过点击蓝牙信号强度显示当前蓝牙信号强度；可设置蓝牙广播的时间和发射功率；可设置振动电机参数；可设置 RTC 时钟；可测试 IOT 模块，APP 会将固件反馈回来的 IOT 信息显示出来；可测试音频；可设置振动传感器加速度阈值 0~255，设置是否获取加速度传感器的信息。

Display the current Bluetooth signal strength by clicking "Bluetooth Signal Strength". You can set the time and transmit power of the Bluetooth broadcast, the parameters of vibration motor, the RTC clock and the IOT module. The APP will display the IOT information returned by the firmware. You can test the audio and set the acceleration threshold of the vibration sensor 0 ~ 255 and whether to obtain the acceleration sensor information.

③ 温湿度传感器 Temperature and Humidity Sensor

可查询当前的温湿度，可设置温度和湿度高低的报警阈值。

The current temperature and humidity can be queried, and the alarm threshold of temperature and humidity can be set.

④ 电池包 Battery Package

可查询电池包当前信息，显示电量百分比、容量、额定电压、当前温度等信息。

You can query the current information of the battery package, and display information such as the percentage of power, capacity, rated voltage, and current temperature.

⑤ 附加设置 Additional Settings

可对已连接的蓝牙柜的蓝牙名称重新设置；可设置指令间隔时间；可以通过手动发送指令进行操作。

The Bluetooth name of the connected Bluetooth locker can be reset. The interval time can be set. and the operation can be performed by manually sending instructions.

⑥ 记录 Record

记录开门次数信息，统计蓝牙连接时间，告警记录统计，可将信息导出为 excel 表格，亦可发送至指定邮箱，可清楚日志。

Record the information of door-opening times, count Bluetooth connection time and alarm record.

You can export the information as an excel table or send it to a designated mailbox. You can also clear the log.

⑦ 版本号 Version Number

显示当前设备序列号，软件版本号，硬件版本号信息。

Display the information such as the serial number of current device, software version number, and hardware version number.

⑧ Sign out

退出当前登录。

Log out.

6 故障分析及注意事项 Failure Analysis and Notes

6.1 电源故障 Power Failure

故障点 failures	问题分析 analysis	解决方案 solution
暂无 no	1、	1、

6.2 通信故障 Communication Failure

故障点 failures	问题分析 analysis	解决方案 solution
开门失败 failed to open the door	1、通讯线连接不稳或脱落（根据实际填写线材编码） 2、锁线连接不稳或脱落 3、开门板工作异常 1. The communication wire is unstable or disconnected (fill in the wire code according to the actual situation). 2. The lock wire connection is unstable or disconnected. 3. The door control board works abnormally.	1、重新拔插通讯线 2、根据实际门号与锁线标贴重新拔插锁线 3、联系售后进行更换 1. Re-plug the communication wire. 2. Re-plug the lock wire according to the actual door number and the lock wire label. 3. Contact after-sale

		personnel for replacement.
电池包电量检测失败 failed to detect the electricity quantity of power package	1、电池控制板异常 2、电池包松动 3、天线异常 1. The power management board works abnormally. 2. The battery package is loose. 3. The antenna is abnormal.	1、更换电池控制板 2、重新拔插电池包 3、联系售后进行更换 1. Replace the power management board. 2. Reinsert the battery package. 3. Contact the after-sales personnel for replacement.
蓝牙连接失败 failed to connect the Bluetooth	1、操作手机蓝牙未开 2、整柜未通电或天线松动 1. The mobile phone's Bluetooth is not turned on. 2. The whole locker is not powered or the antenna is loose.	1、打开手机蓝牙 2、通电或重新拔插天线 1. Turn on the phone's Bluetooth. 2. Power on or re-plug the antenna.
振动电机打开失败 failed to open the vibration motor	1、振动电机电源线松动 2、振动电机损坏 1. The power cable of the vibration motor is loose. 2. The vibration motor is damaged.	1、检查线路连通，使之正确连接 2、联系售后进行更换 1. Check the connection of the line to make it connected correctly. 2. Contact the after-sales personnel for replacement

6.3 注意事项 Notes

1) 不可钻入格口中

2) 投递或取出包裹后，请手动关门

3) 测试时，请勿快速重复使用同一个功能

4) 每次只能开启一扇门（在开箱时需保证其余格口是关闭状态，再次取物和投递时，须关闭上一次打开的格口，才能进行操作）。

1) Do not enter slot.

2) Manually close the door after drop-off or pick-up.

3) Do not reuse the same function quickly during the test.

4) Only one door can be opened at a time(When opening the slot, other slots should be closed. When picking up or dropping off again, the slot last opened should be closed before operation.).

7 认证警示说明 Certification Warnings

警告：

请勿尝试自行拆卸电池。不要充电。有起火，爆炸或燃烧的危险。请勿挤压，刺穿，拆卸或短路。请勿使电池着火或进水。

CAUTION:

Do not attempt to disassemble the battery yourself. Do not charge. Risk of fire, explosion, or burns. Do not crush, puncture, disassemble,nor short-circuit. Do not expose the battery to fire nor water.

FCC

在用户手册中

In the user manual

重要提示：未经负责合规的一方明确批准擅自对本机进行更改或改装，可能会导致用户丧失操作设备的权利。

Important: Changes or modifications to this unit not expressly approved by the party responsible for compliance could void the user's authority to operate the equipment.

注意：根据 FCC 第 15 章的规定，本设备已经过测试，符合 B 类数字设备的限制。 这些限制旨在为住宅安装中的有害干扰提供合理的保护。 本设备会产生，使用并辐射射频能量，如果未按照说明进行安装和使用，可能会对无线电通信造成有害干扰。 但是，不能保证在特定安装中不会受到干扰。 如果此设备确实对无线电或电视接收造成有害干扰（可以通过打开和关闭设备来确定），则鼓励用户尝试通过以下一种或多种方式来消除干扰：

Note: This equipment has been tested and found to comply with the limits for a Class B digital device, pursuant to part 15 of the FCC Rules. These limits are designed to provide reasonable protection against harmful interference in a residential installation. This equipment generates, uses and can radiate radio frequency energy and, if not installed and used in accordance with the instructions, may cause harmful interference to radio communications. However, there is no guarantee that interfe rence will not occur in a particular installation. If this equipment does cause harmful interference to radio or television reception, which can be determined by turning the equipment off and on, the user is encouraged to try to correct the interference by one or more of the following measures:

—重新调整或摆放接收天线。

—Reorient or relocate the receiving antenna.

—增加设备和接收器之间的距离。

—Increase the separation between the equipment and receiver.

—将设备连接到与接收器不同电路的插座上。

—Connect the equipment into an outlet on a circuit different from that to which the receiver is connected.

—请咨询经销商或有经验的无线电/电视技术人员以寻求帮助。

—Consult the dealer or an experienced radio/TV technician for help.

本设备符合 FCC 规定的在不受控制的环境中的射频暴露限制，应在设备与用户或旁观者之间至少 20 厘米的距离安装和操作本设备。 此设备不得与其他任何天线或发射器放在一起放置或一起使用。

This equipment complies with radio frequency exposure limits set forth by the FCC for an uncontrolled environment. This equipment should be installed and operated with a minimum distance of 20 cm between the device and the user or bystanders. This device must not be co-located or operating in conjunction with any other antenna or transmitter.

IC

在用户手册中

In the user manual

此设备包含符合加拿大创新，科学和经济发展部的免许可证 RSS 的免许可证发射器/接收器。操作必须符合以下两个条件：

This device contains licence-exempt transmitter(s)/receiver(s) that comply with Innovation, Science and Economic Development Canada's licence-exempt RSS(s). Operation is subject to the following two conditions:

（1）此设备不会造成干扰。 （2）本设备必须接受任何干扰，包括可能导致设备意外操作的干扰。

(1) This device may not cause interference. (2) This device must accept any interference, including interference that may cause undesired operation of the device.

此设备符合加拿大创新，科学和经济发展部针对不受控制的环境所设定的射频暴露限制。 此设备的安装和操作应在设备与用户或旁观者之间保持至少 20 厘米的距离。 此设备不得与其他任何天线或发射器放在一起放置或一起使用。

This equipment complies with radio frequency exposure limits set forth by the Innovation, Science and Economic Development Canada for an uncontrolled environment. This equipment should be installed and operated with a minimum distance of 20 cm between the device and the user or bystanders. This device must not be co-located or operating in conjunction with any other antenna or transmitter.

French version 法文版

Le présent appareil est conforme aux CNR d'Industrie Canada applicables aux appareils radio exempts de licence. L'exploitation est autorisée aux deux conditions suivantes : (1) l'appareil ne doit pas produire de brouillage, et (2) l'utilisateur de l'appareil doit accepter tout brouillage radioélectrique subi, même si le brouillage est susceptible d'en compromettre le fonctionnement.

Cet équipement est conforme aux limites d'exposition aux radiofréquences définies par la Innovation, Sciences et Développement économique Canada pour unenvironnement non contrôlé. Cet équipement doit être installé et utilisé avec un minimum de 20 cm de distance entre le dispositif et l'utilisateur ou des tiers.Ce dispositif ne doit pas être utilisé à proximité d'une autre antenne ou d'un autre émetteur.

8 其他 Others

8.1 免费保修服务计划 Free Warranty Service

①质保期期限：产品及其配套件提供 1-3 年质保。

1）Warranty period: The product and its accessories are provided with a 1-3 year warranty.

②质保期期限起计方式：验收合格。

2) Starting date of warranty period: When the product is accept.

③保养方式：我方每年将至少两次对在保修期内的寄存柜产品进行全面的检测保养，时间一般在"五一"和"十一"前后，维护保养时间一般在夜间进行，以免影响贵单位白天的正常经营。我公司会提前通知，由贵单位安排具体时间和夜间值班配合人员。

3) Maintenance method: We will conduct a comprehensive maintenance of the locker at least twice a year during the warranty period, which is generally around "May 1" and "Oct. 1" and carried out at night to prevent affecting your normal operation. Our company will inform in advance and you should arrange the specific time and staff on duty at night.

④检测保养项目包括：锁具位置是否偏移，软件运行是否正常，外观是否损伤等，保修期内的故障我公司将免费解决。（人为损坏除外）

4) The maintenance items include: whether the position of the lock is offset, whether the software is operating normally, whether the appearance is damaged, etc., and we will solve the problems during the warranty period for free. (except for man-made damage)

⑤保养报告：每次保养完毕，我公司人员向贵单位出具保养、调整和修复内容的报告，由双方签字确认。

5) Maintenance report: Every time the maintenance is completed, our staff will issue a report on the contents of maintenance, adjustment and repair to you, which will be signed and confirmed by both parties.

⑥日常维修处理程序：全年 7X24 小时服务，接到报修电话后 24 小时以内上门服务，修复期不超过一周。我方售后服务机构接到贵单位电话故障通知时，会记录贵单位电话，问清故障现象，维修员根据故障现象，决定是否先电话指导修复。如果电话指导不能修复，维修员将立即前往贵单位进行上门维修。在使用单位人员陪同下，打开机柜检查修维。维修完毕后，填写售后服务表，告知故障及处理结果，由贵单位相关负责人签字。

6) Processing procedures of daily maintenance: We provides 7X24 hours of service throughout the year. On-site service will be provided within 24 hours after receiving the repair call. The repair period will not exceed one week. When our after-sales staffs receives a notification from you, they will record your phone number and ask for details, and the maintenance staff will decide whether to guide you to repair by phone according to the record. If not, the maintenance staff will immediately provide on-site service. Accompanied by the staff from your company, the maintenance staff will open the locker for maintenance. After the maintenance is completed, the maintenance staff will fill out the after-sales service form and tell you the problem and the processing result. The person in charge from your company should sign it.

8.2 保修期满后，付费维修服务收费标准 Standard of Paid Maintenance Services After Warranty Period

在保修期满后，我公司仍将提供后续有偿的服务，根据客户的不同需求，我公司提供了两套个性化的售后服务形式以供选择，具体如下：

①全年包干维修保养方案。由我公司负责维修保养，每年至少全面检测保养两次。维护过程中产生的人工费、差旅费、配件费（如果是条码型，则不包括损耗件：打印机芯、切纸刀）均由我公司承担。

②按次维修方案。每次接到贵单位通知后上门进行维修，路费，人工费和配件费 由贵单位承担。日常保养由我公司培训贵单位人员完成。

③免费维修方案。贵单位派人到我公司进行免费的学习培训。日常保养及维修由我公司培训贵单位人员完成。

After the warranty period expires, we will still provide follow-up paid services. According to the different requirements of the clients, we provides two sets of personalized after-sales service for selection as follows:

1) Annual maintenance. We will be responsible for the maintenance at least twice a year. And we will bear the round trip fare, labor and accessories costs(if the locker belongs to the barcode type, the consumable parts are not included: printer core and paper cutter) generated by the maintenance.

2) Maintenance by times. Every time you need our maintenance service, you should be responsible for round trip fare, labor and accessories costs. The daily maintenance is completed by your staff who is trained by us.

3) Free maintenance. You can arrange the staff to our company for free learning and training. Daily maintenance and repairs will be finished by your staff under our guidance.

8.3 服务承诺 Service Commitment

质保期内承诺 Commitment within the warranty period：

①因质量问题而产生的维修、配件材料更换及相关人工由我公司负责。

②因设备的质量原因而造成丢失损失由我公司按照《中华人民共和国合同法》中的“保管合同”的约定承担责任。

③人为损坏由我公司派人维修，损坏器件有偿提供。

1) We are responsible for maintenance, replacement of parts materials and related labor costs due to quality problems.

2) We are responsible for the loss caused by the quality problems in accordance with the "Storage Contract" in the "Contract Law of the People's Republic of China".

3) Human-made damage will be repaired by us, while damaged devices we provided are not for free.

免费质保期满后承诺 Commitment after the warranty period：

①我公司提供终身维护，由用户负责人工费和材料费。

②配合用户需求，提供有偿升级和改进。

①We provide lifetime maintenance, and the user is responsible for labor and material costs.

② We provide paid upgrade and improvement service in line with your needs.

8.4 联系方式 Contact Information

公司总部：深圳市南山区学苑大道 1001 号南山智园 C3 栋 15 层
联系电话：0755-28657760
公司传真：0755-86021660
公司邮箱：zhilaikeji@zhilai.com
分公司：深圳市智莱科技股份有限公司横岗分公司
地址：深圳市龙岗区横岗街道大康路 19 号 328 工业区
湖北智莱科技有限公司
地址：湖北省咸宁市经济开发区长江产业园（龟山路、永安东路与咸通高速交汇处）
武汉市智莱鹏飞科技有限公司
地址：武汉市东湖新技术开发区武大航域二期 B3 栋 1801

head office: 15th Floor, Building C3, Nanshan Zhiyuan, 1001 Xueyuan Avenue, Nanshan District, Shenzhen

Tel: 0755-28657760

Fax: 0755-86021660

Email: zhilaikeji@zhilai.com

branch office: Shenzhen Zhilai Sci &Tech Co., Ltd. Henggang Branch

address: 328 Industrial Zone, 19 Dakang Road, Henggang Subdistrict, Longgang District, Shenzhen

Hubei Zhilai Sci &Tech Co., Ltd.

Address: Yangtze River Industrial Park, Economic Development Zone, Xianning, Hubei (the intersection of Guishan Road, Yongan East Road and Xiantong Expressway)

Wuhan Zhilai Pengfei Sci &Tech Co., Ltd.

address: Room 1801, Building B3, Wuda Space Area, Wuda Science and Technology Park, East Lake High-tech Development Zone, Wuhan

--全文完 ending--

变更履历 Revision History

发布日期 issue date		2020-5-25	实施日期 implementation date	2020-5-25	
制定/修改日期 date of edition/ modification	版本号 version No.	修改主要内容 main contents modified	编制 written by	审核 reviewed by	批准 approved by
2020-1-16	1.0	新版编制 new edition	张泉江 Zhang Quanjiang		
2020-4-10	2.0	柜型优化，测试 APP 优化；使用电池包及电源管理板供电，升级电机锁、蓝牙核心板、蓝牙扩展板，增加 IOT 天线、IOT 模块、下方应急盖板检测 Optimize the locker type and test App. Use the battery package and power management board for power supply. Update the motor lock, Bluetooth core board and Bluetooth expansion board. Add IOT antenna, IOT module and lower front cover detection.	张泉江 Zhang Quanjiang		
2020-5-25	3.0	增加顶部两个格口的承重信息；增加地脚可调整的最大高度；增加格口操作注意事项。 Add the load-bearing information of the top two slots, the maximum adjustable height of slot and notes of slot operation.	张泉江 Zhang Quanjiang		

2020-6-16	3.1	增加警告标示 Add certification warnings and block description.	张泉江 Zhang Quanjiang		

USA023 Light Box Assembly
Product Integration Department
Product Operation Manual

Project No.: 2019315

Creation: Zhang Quanjiang

Review:

Approval:

Confidentiality: □ Public disclosure □Internal disclosure □ Confidential

March 10th, 2021

Legal statement

All rights reserved © by Shenzhen Zhilai Sci. and Tech. Co., Ltd.

No organization or individual may extract or copy part or all the manual herein, nor circulate it in any means without written permission by Shenzhen Zhilai Sci. and Tech. Co., Ltd.

The products described herein may contain copyrighted software owned by Shenzhen Zhilai Sci. and Tech. Co., Ltd., and possible licensors. Unless permitted by relevant right holder, no one can copy, distribute, modify, extract, decompile, disassemble, decrypt, reverse engineer, rent, transfer, sublicense the aforementioned software in any form and infringe the copyright of the software, except where applicable laws prohibit such restrictions.

Contents

1 OVERVIEW 4

2 PRODUCT FUNCTIONAL BLOCK DIAGRAM . . . . . ERROR! BOOKMARK NOT DEFINED.

3 BASIC OPERATION PROCEDURE OF THE PRODUCT . . . . . ERROR! BOOKMARK NOT DEFINED.

4 SOFTWARE OPERATION INSTRUCTIONS . . . . . ERROR! BOOKMARK NOT DEFINED.

5 FAILURE ANALYSIS AND SOLUTIONS . . . . . ERROR! BOOKMARK NOT DEFINED.

Design of USA023 light box assembly system integration_product operation manual

1 Product system profile

USA023 light box is consist of light board, light control board and several cables and is powered by the locker. The main function is to provide lighting at night. The light box will enter low-luminance mode when no person picks up items at night, and high-luminance mode when a person picks up items. The light box does not work during daytime.

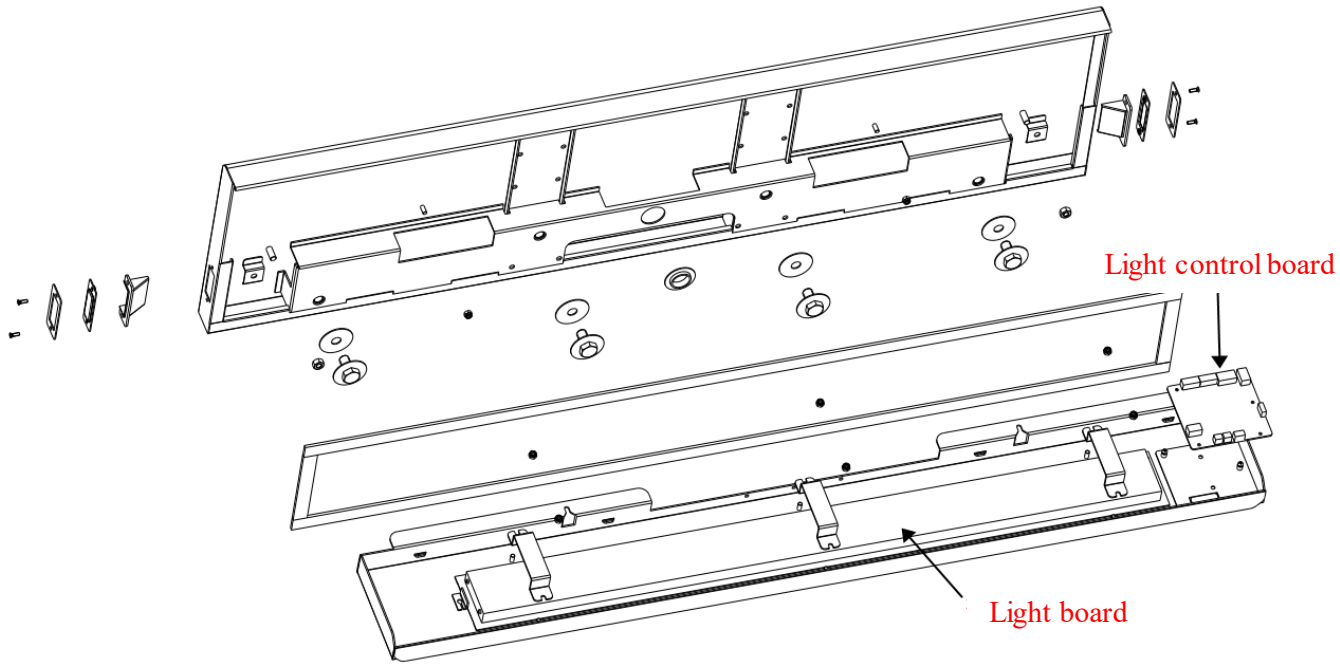

No.	Module name	Introduction of functions	Remarks
1	Light board:	Outdoor lighting	
2	Light control board:	Control ON and OFF of the light.	
3	Cables(several):	To connect functional modules, transfer power and signals.	

2 Product functional block diagram

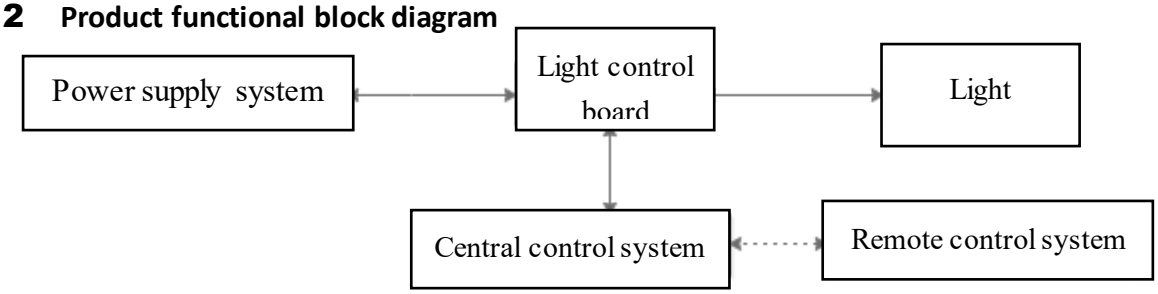

3 Basic operation procedure of the product

The light box shall be installed to the delivered Odin locker to provide lighting for the customers at night.

4 Software operation instructions

Software to be designed by the customer.

5 Failure analysis and solutions

5.1 Power supply failure

Failure	Issue analysis	Solution
Light is not on.	1. The external power cord is disconnected or not connected stably. 2. Operation error of on-board photoresistance 3. 3. Operation error of light control board	1. Unplug and re-plug the external power cord 2. Replace light control board

5.2 Communication failure

Failure	Issue analysis	Solution
Uncontrolled ON and OFF of the light board	1. The communication wire is disconnected or not connected stably. 2. Operation error of on-board photoresistance 3. 3. Operation error of light control board	1. Unplug and re-plug the communication wire. 2. Replace light control board

-- The end --

Revision history

Date of creation/revision	Version	Main content of revision	Drafted by	Reviewed by	Approved by
20210310	1.0	New version	Zhang Quanjiang		