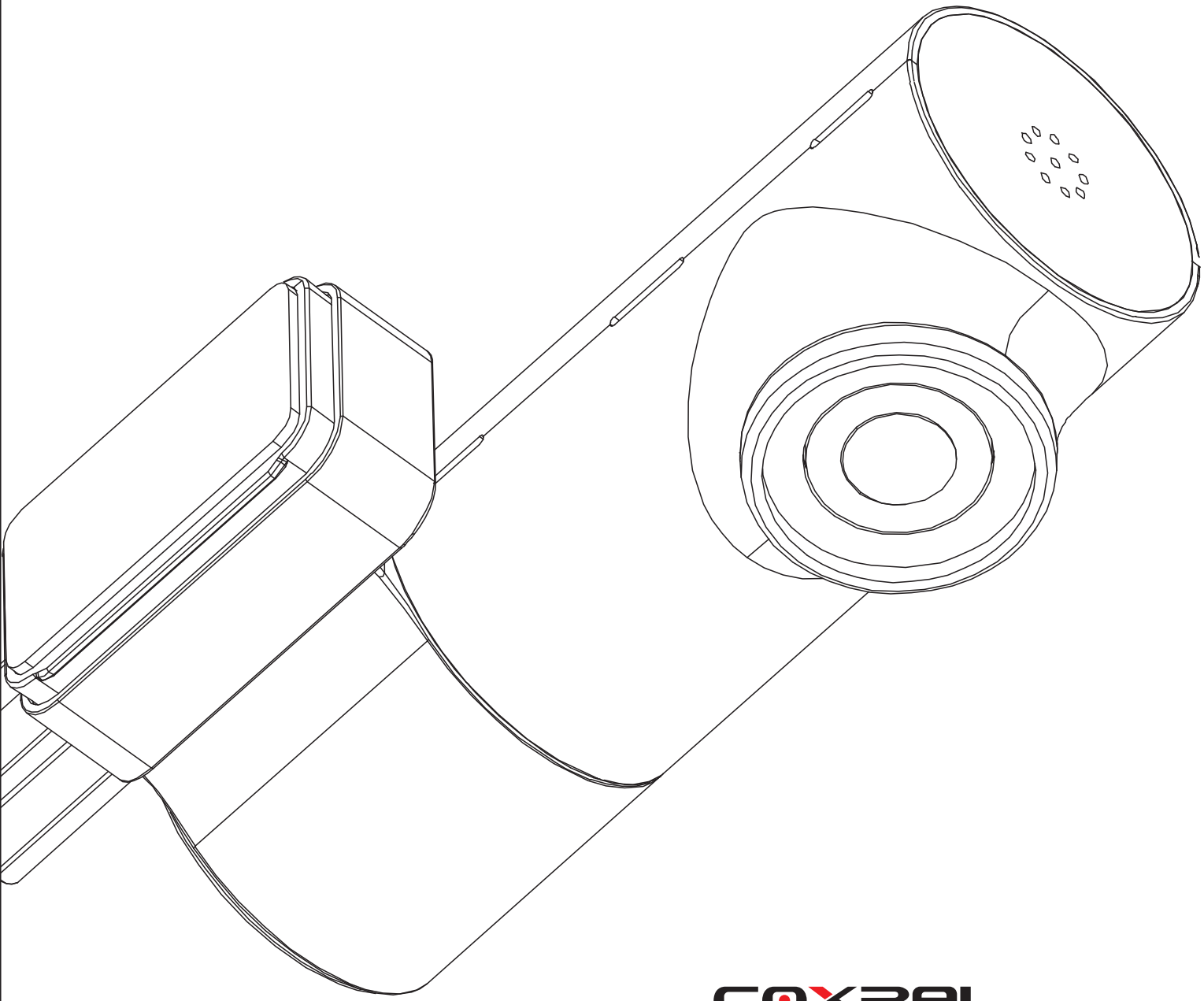

COXPAL

User Manual

Model No:

A17S = Single Front Dash Cam

A17D = Dual Dash Cam Front and Rear

Contents:

❶ Safety Instructions /01

❷ Warranty & Support /02

❸ What's In The Box /03

❹ At A Glance /04

❺ microSD Card /05

❻ Power Supply /08

❼ Installation /09

❽ Use /12

1. Heat
2. Shortcut Keys & LED Indicators
3. Voice Prompt
4. GPS
5. WiFi
6. HDR
7. Glare and Reflections
8. Tinted rear windshield
9. Parking monitor
10. Watch recordings via PC
11. Reset
12. Firmware Upgrading

❾ APP /19

❿ Specifications /24

⓫ FAQs /25

1 Safety Instructions

Please read and understand all instructions hereunder before using this product. If damage is caused by failure to follow the instructions, the warranty does not apply.

- Keep this user manual.
- DO NOT operate this product while driving.
- DO NOT drop, puncture, or disassemble this product.
- DO NOT expose this product to liquid, or open flames.
- DO NOT use any corrosive cleaners/oils to clean this product.
- DO NOT install this product where it can block the driver's view.
- DO NOT use the power charger if the power cable is damaged, or broken.
- Use original accessories only.
- Set **Time Zone** correctly before using this product.
- Keep the camera lens clean and nothing blocking the lens.
- Remove this product from your vehicle when not in use for a long period.
- Avoid long exposure to direct sunlight or high temperature that may significantly shorten the lifespan of the product.
- The Company is NOT responsible for the loss of any data during the use.

2 Warranty & Support

Thanks for choosing COXPAL!

Support:

Item NOT as described?
Damaged or defective?
Missing items?
Any issues whatsoever?

Contact us via support@coxpal.com before returning the item, we will help you resolve any issues ASAP. Customer satisfaction is our eternal pursuit.

Also find us here

Warranty:

From the date of purchase on, the product is warranted for 18 months. Meanwhile, COXPAL offers lifetime technical support for all our users.

Product Registration Program:

COXPAL has Product Registration Program to help customers extend warranty by 6 months. Visit www.coxpal.com and register your product to extend the warranty from 18 months to 24 months.

Your opinion matters!

Coxpal is firmly committed to continually improving our products, services, and user experience. If you have any thoughts on how we can do even better, we always welcome your constructive feedback and suggestions.

3 What's In The Box

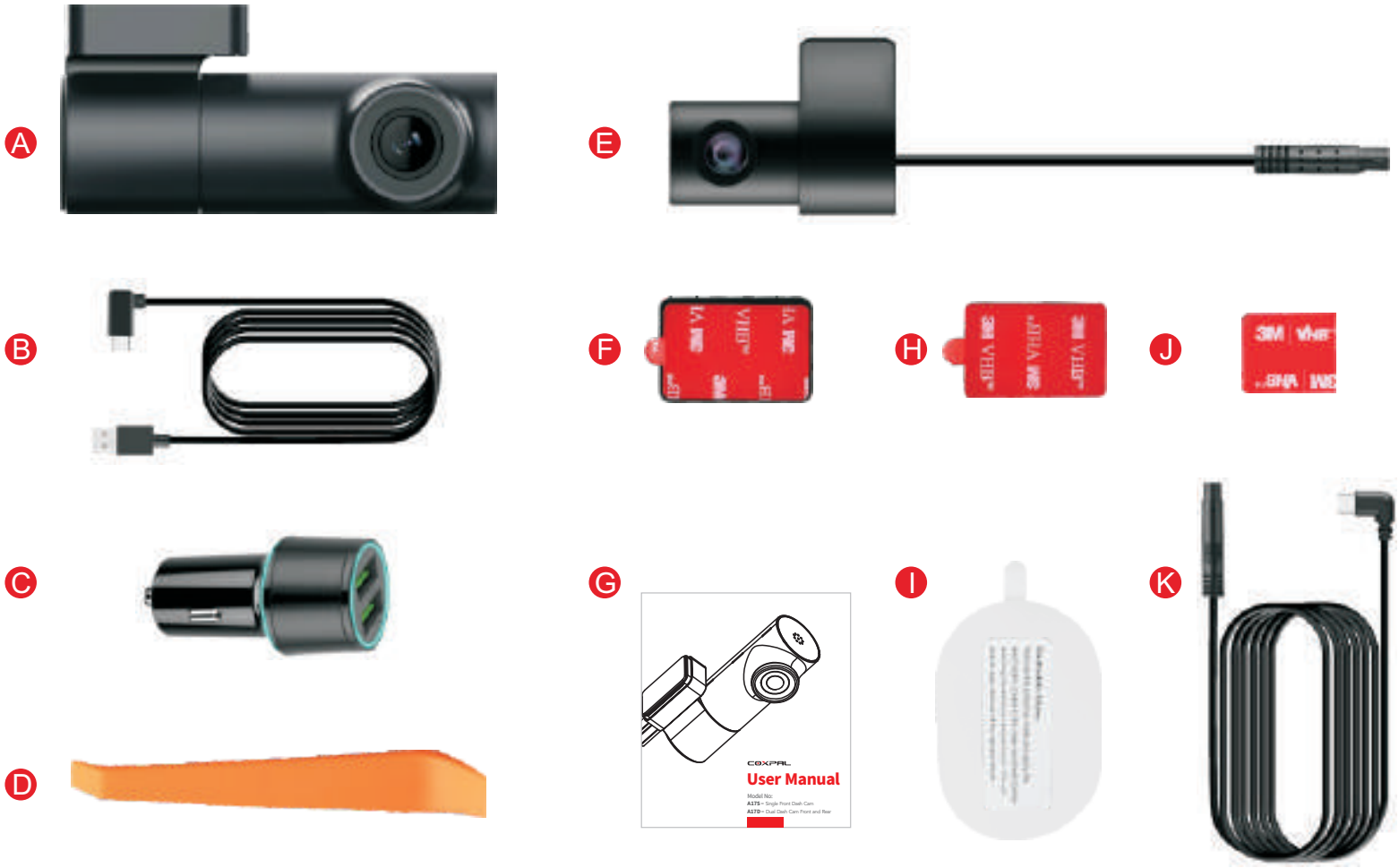

A. 1 * Main camera

B. 1 * USB power cable, length 3.5m (11feet)

C. 1 * Dual USB car charger, 5Vdc/3.1A

D. 1 * Crowbar

E. 1 * Rear cam with 0.5m (1.64feet) cable

F. 1 * Mount with 3M sticker

G. 1 * User manual

H. 1 * Spare 3M sticker for the mount

I. 4 * Electrostatic sticker

J. 1 * Spare 3M sticker for rear cam

K. 1 * Rear cam cable, length 5.5m (18feet)

4 At A Glance

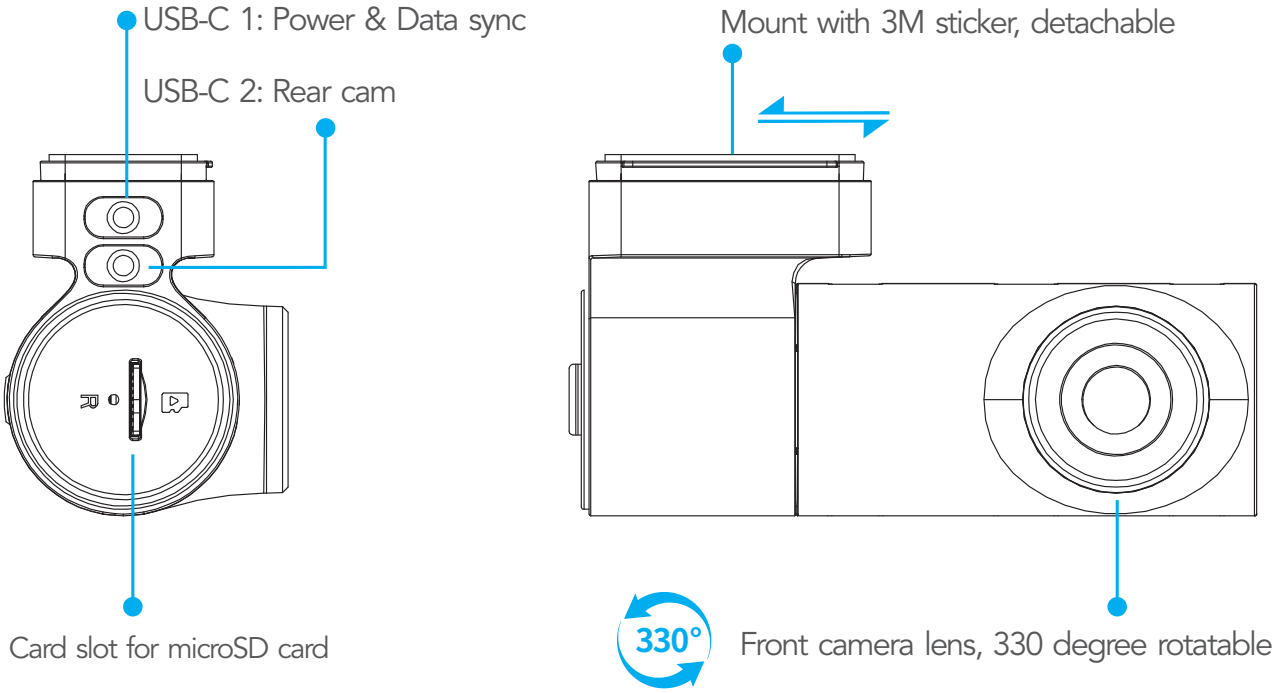
USB-C 1: Power & Data sync
USB-C 2: Rear cam
Mount with 3M sticker, detachable
Card slot for microSD card
330°
Front camera lens, 330 degree rotatable

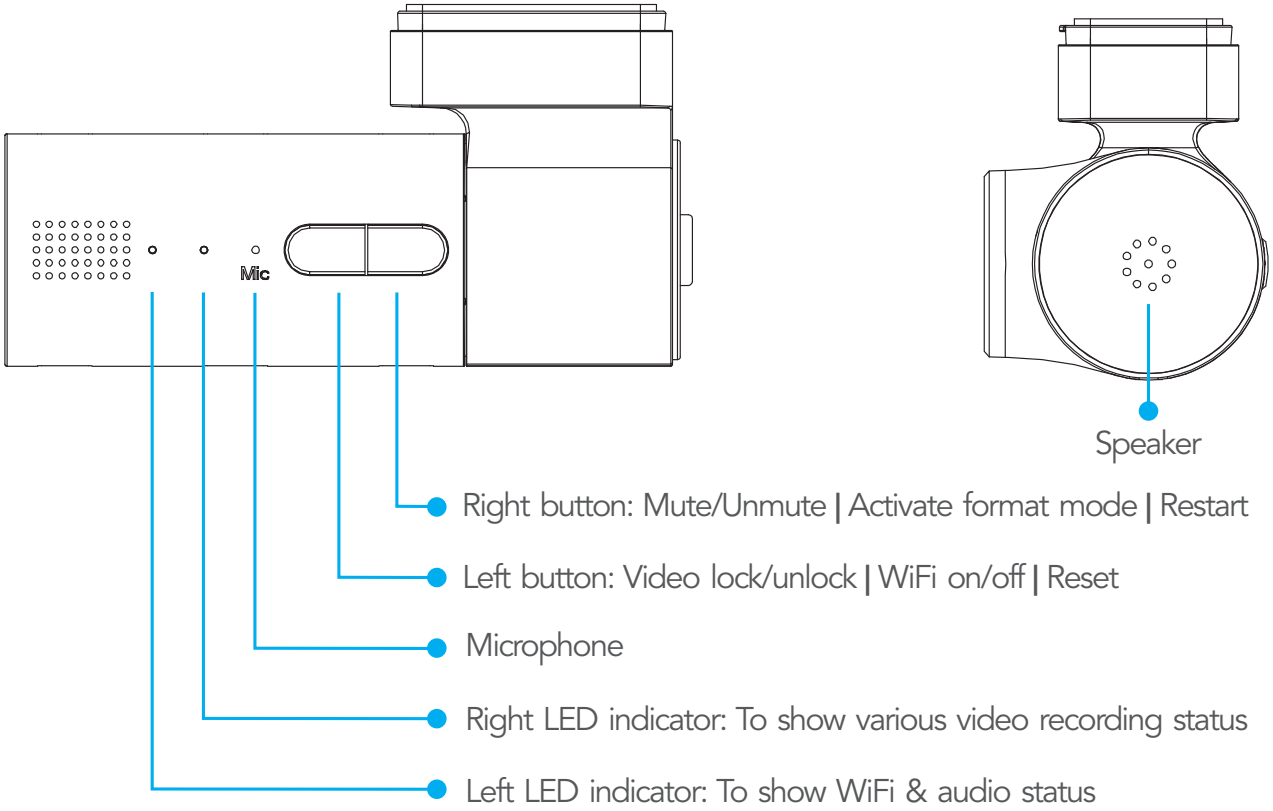
Mic
Speaker
Right button: Mute/Unmute | Activate format mode | Restart
Left button: Video lock/unlock | WiFi on/off | Reset
Microphone
Right LED indicator: To show various video recording status
Left LED indicator: To show WiFi & audio status

5 microSD Card

This camera supports **genuine** microSD card up to **512GB** with a speed rating of **UHS-1 U3** or above.

For 64GB or 128GB or 256GB or 512GB new card, please beforehand format it to FAT32.
The card can be formatted by this camera:

- Press and hold right button 3 seconds to activate formatting mode;
- Press right button to confirm formatting.

To avoid triggering "card error", old card also needs to be formatted if:

- There are other irrelevant files in it.
- It is used with phone card reader, because the phone could possibly generate some system files in it.

Typical recording time in normal recording mode:

Capacity	4K@30 front + 2K@30 rear (Bitrate = Normal)	4K@30 front (Bitrate = Normal)	2K@30 front (Bitrate = Normal)
128GB	5.8H	8.9H	16.5H
256GB	11.6H	17.8H	33H
512GB	23.2H	35.6H	66H

Critically important to use **high quality** microSD card:

SanDisk MAX Endurance	Recommended.
SanDisk Extreme SanDisk Extreme PRO Samsung PRO Ultimate Samsung EVO Plus Samsung PRO Endurance	Mainstream but small probability of encountering card problem.
Other cards	NOT recommended, although some of them can work flawlessly.

If "card slow" or "card error":

- It is 99.99% a card problem, you can use PC tools like "H2TESTW" or "ATTO Disk Benchmark"to verify its actual writing speed.

Normal read and write speed

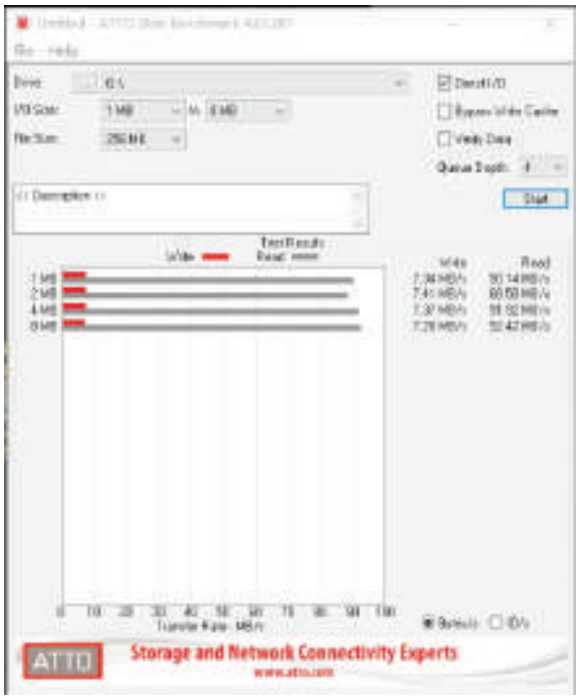

Normal read but **abnormal** write speed

- According to our camera software working mechanism, "card slow" or "card error" only appears when the camera detected the problem of microSD card. There are usually 2 strategies to deal with card problem by dash cams, our camera adopts the 2nd:

  1). No prompt: Bypass directly, the camera goes on recording, but the video clip at that time can not be saved properly;

  2). Give prompt: The problem needs to be addressed firstly, then the camera starts to record again.

If "card slow" or "card error" is **low frequent**: Please format microSD card and ignore it.

If "card slow" or "card error" is **high frequent**: Please replace it with a new microSD card.

2 tips:

- Ideally have a spare microSD card for alternate use or emergency use.
- Format the card every 2 weeks to ensure it works properly and stores the data securely, meanwhile, empty "Event" folder to have more available storage space.

Insert microSD card:

DO NOT remove, or insert the card when this camera is powered on which may cause card corruption and data loss.

Insert the card with the gold contacts facing the back side of the camera, push the card until it clicks into the place.

To remove the card, gently push its top edge inward until it clicks, then pull it out of the card slot.

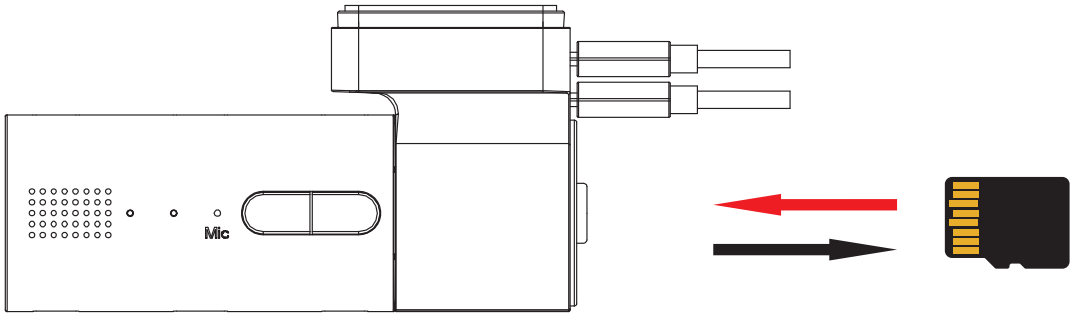

6 Power Supply

Important to use qualified power supply to **avoid camera randomly on/off:**

- ✓ Original USB car charger + Original USB power cable
- ✓✗ Non-original USB car charger + Original USB power cable
- ✓✗ In-car USB port + Original USB power cable
- ✗ Computer USB port + Power cable
- ✓ Original 3-wire hardwire kit
- ✓✗ Non-original 3-wire hardwire kit if USB Type-C connector ACC definition is **A5/B5**.

Why original USB car charger is important ?

- Actual output of original USB car charger is 5.1V-5.3V (5.2V ±0.1V).
- Actual output of other USB car chargers or in-car USB ports is 4.75V-5.25V (5V ±5%).
- Because of 11feet (3.5m) long power cable used by the dash cam, the voltage will drop a lot.
- Hence, if the actual output voltage of other USB car chargers or in-car USB ports is for example 5V or below, the dash cam will not receive 4.75V, then it will randomly turn on/off.

Why original USB power cable is important ?

- Because original USB power cable is qualified to pass 2A current, we are not sure if other USB power cables are qualified to pass 2A current too.

What do I do if original 3.5m(11feet) power cable is not long enough ?

- Original 3.5m(11feet) power cable can be compatible with the overwhelming majority of vehicles. However, we do believe that a few vehicles need a longer one. In this case, you can add an extra cigarette lighter splitter to extend the length.

What do I do if my vehicle doesn't have cigarette lighter but only USB port ?

- If our dash cam doesn't randomly turn off/on, it means the USB port can provide stable power to our dash cam.
- If our dash cam randomly turn off/on, it means the USB port can't provide stable power to our dash cam. In this case, the ideal solution is get an extra COXPAL hardwire kit, to get power from fuse box directly, it can not only free one USB port, but also realize parking monitor.

7 Installation

Before installation

Bench test is a must, implement the installation only if camera works normally.

Insert microSD card into the camera → Connect rear cam with front cam → Connect front cam to cigarette lighter via COXPAL original USB car charger and USB power cable.

Format microSD card if it is new (Camera will give voice prompt).

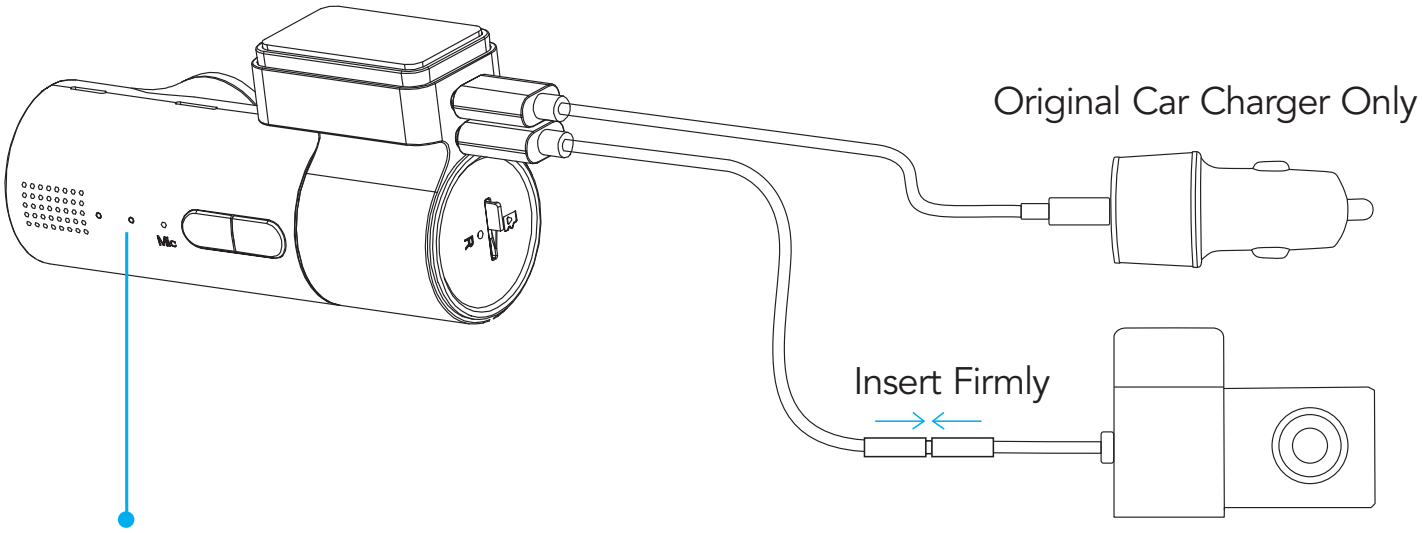

Red flash = Front cam works normally.

Blue flash = Both front cam and rear cam work normally.

Install front camera

DO NOT install the camera in a location where may obstruct driver's view.

Ensure the camera lens is within the wiping range of the windscreen wiper to ensure a clear view in all weather conditions.

Generally speaking, install the camera near the rear view mirror to obtain the best open-field view.

Select an ideal location, look at the camera's video location by temporarily holding it on the windshield and make sure you like the installation spot of your choice before proceeding.

Clean the selected location with clear water and wait until fully dry.

Remove the protective sheet of the electrostatic sticker, attach applicable side of the electrostatic sticker onto the selected location. **Important:**

- After peeling off the protective sheet, do NOT touch the applicable side of the electrostatic sticker with fingers.
- When applying the electrostatic sticker on car's windshield, avoid the dot matrix pattern.
- Make sure no air bubbles between windshield and electrostatic sticker.

Remove the red protective film of the adhesive tape on the mount, firmly affix the mount onto the electrostatic sticker, then install the front camera onto the mount.

Route power cable and rear cam cable (If applicable)

Use the crowbar to hide power cable and rear cam cable under the trim and roof liner as illustrated below:

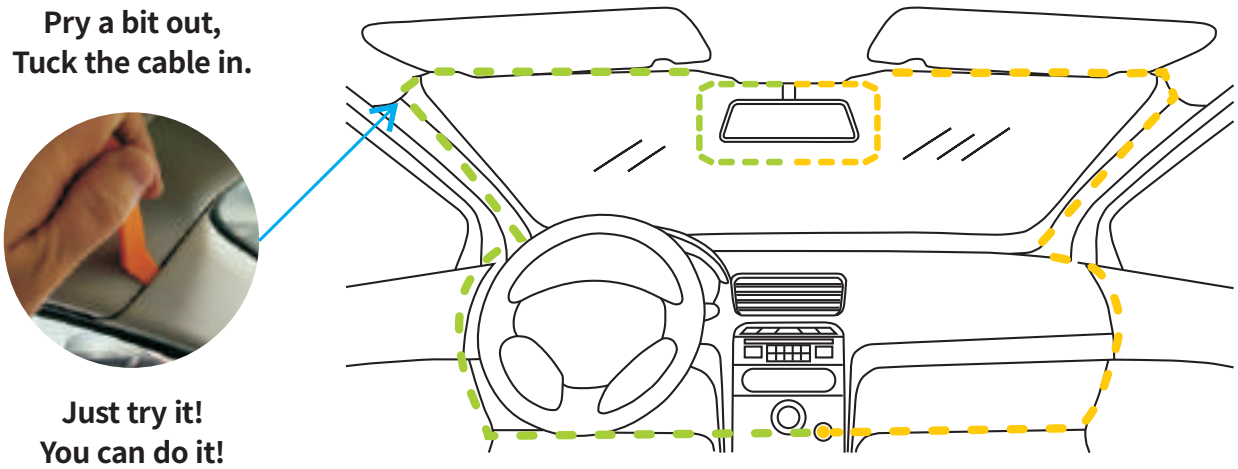

Install rear camera (If applicable)

Rear cam is **NOT** waterproof and can **NOT** be installed outside of the car.

Select an ideal location, look at the camera's video location by temporarily holding it on the windshield and make sure you like the installation spot of your choice before proceeding.

Remove the protective sheet of the electrostatic sticker, attach applicable side of the electrostatic sticker onto the selected location. **Important**:

- After peeling off the protective sheet, do NOT touch the applicable side of the electrostatic sticker with fingers.
- Make sure no air bubbles between windshield and electrostatic sticker.

Remove the red protective film of the adhesive tape on rear cam, firmly affix the rear cam onto the electrostatic sticker.

If your vehicle is SUV/MPV/Van/Hatchback (No problem if Sedan), Important:

- If you just want a quick and simple installation to the rear cam, it is OK to let rear cam cable dangling between the headliner and liftgate, but please note that **plenty of slack will be needed** when the windshield is outstretched, or both the rear cam cable and the rear cam may potentially be damaged.
- If you know how to let the rear cam cable go through the hose between the chassis and the liftgate, congratulations! You definitely have a strong DIY ability, the rear cam installation will look neat and professional.

After installation

Remove the protective film on camera lens----be especially careful NOT to leave fingerprints.

Adjust the viewing angle of camera lens, ideally 50% road + 50% sky lens adjustment so the camera's exposure can function properly.

Store spare electrostatic sticker and adhesive tape in case of future use.

8 Use

Once installed properly, the camera will function without the need of maintenance.

1. Heat

It is normal that the surface of plastic housing is hot. Because the higher resolution video recorded, the more heat generated by the main processor. Our camera has excellent heat dissipation design which can effectively convey the heat of main processor to outside.

Please rest assured to use our camera:

- The camera has passed rigorous burn-in test and it can work reliably.
- Plastic housing will NOT be deformed or melted in normal use environment.
- No fire risk.

2. Shortcut Keys & LED Indicators

Left LED indicator

Solid blue: Muted
Solid red: WiFi on

Right Button

Short press: Muted/Unmuted
Press and hold 3 seconds: Activate format mode
Press and hold 8 seconds: Power On/Off

Right LED indicator

Solid red: Recording paused
Red flash: Single front recording
Blue flash: Dual channel recording
Red slow flash: Single front parking mode
Blue slow flash: Dual channel parking mode

Left Button

Short press: Lock video/Unlock video
Press and hold 3 seconds: WiFi On/Off
Press and hold 8 seconds: Reset

3. Voice Prompt

	中文	English
microSD card	请插卡	Please insert microSD card
	请长按右键3秒格式化卡	Please press and hold right button 3seconds to format microSD card
	请短按右键确认格式化	Please press right button to confirm formatting
	格式化中，请不要断电或拔卡	Formatting, please don't power off or remove microSD card
	格式化成功	Formatting successfully
	卡速慢	Card slow
	卡错误	Card error
	卡满	Card is full
Audio	录音已关闭	Muted
	录音已打开	Unmuted
WiFi	打开热点	WiFi on
	关闭热点	WiFi off
Emergency Video	视频上锁	Video locked
	视频解锁	Video unlocked
GPS	无GPS	No GPS

4. GPS

Set Time Zone correct is a must, then built-in GPS can automatically sync correct local time.

- GPS positioning usually takes about 1-3 minutes, depends on signal strength.
- No GPS signal if in underground parking, or tunnel etc.
- The video(s) before GPS positioned don't have embedded GPS information.

5. WiFi

Camera WiFi can be "Always on" or "Auto-off after 10 minutes". "Auto-off after 10 minutes" is recommended because:

- To lower both power consumption and working temperature a bit, it is good for the lifespan of the camera.
- For most of the time, the camera does NOT need to be connected but just let record alone.

6. HDR

1. Either HDR On or HDR Off has its merits and demerits.
2. Generally speaking, HDR On can harvest the best image in the vast majority of scenarios.

7. Glare and Reflections

They are normal optical phenomena but NOT a camera quality issue. The factors of causing glare and reflections such as: The angle of the sun, the design of the dashboard, dirty or dusty windshields etc.

A CPL can effectively reduce glare and reflections, but 2 potential issues:
1. Lower image brightness at night.
2. Rainbow stripes may appear if the windshield is tinted.

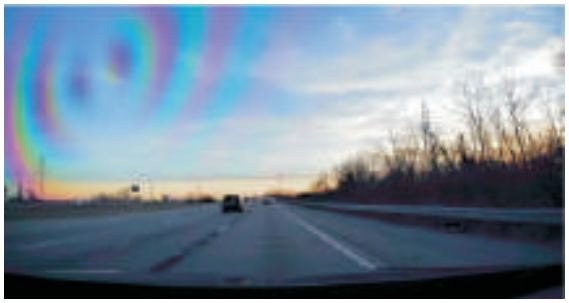

Lay a **matte-finish** dash mat, dash cover, or even a black towel on dashboard can be an ideal solution, it is not only good for camera image, but also good for driver to enhance visibility, to have better driving experience etc.

8. Tinted rear windshield

It typically has a negligible impact during the day but can significantly degrade image quality at night.

- Daytime: The dash cam automatically adjusts its exposure settings to compensate for the tint. The footage remains clear, often with reduced glare from direct sunlight.
- Nighttime: Tints drastically reduce the light reaching the sensor. This forces the camera to increase its sensitivity, which leads to grainy, noisy footage. In poorly lit areas, identifying license plates through the tint can become nearly impossible.

9. Parking monitor

Constant power required to realize parking monitor.

Parking Mode	When car engine is off		
	General Cigarette Lighter	**Active Cigarette Lighter**	**COXPAL 3-wire hardwire kit**
OFF	off	Normal recording	off
Time Lapse 1FPS	off	Normal recording	Time Lapse 1FPS GPS off WiFi off Guard Time → off
Low Resolution FHD@30FPS	off	Normal recording	Low Resolution FHD@30FPS GPS off WiFi off Guard Time → off
Shutdown after 15 minutes	off	Normal recording If remain stationary for 15 minutes → off Wakeup automatically (if G-sensor triggered)	off

Why camera doesn't have built-in battery but super capacitor instead?

1. Limited by camera size, large capacity battery can't be applied inside.
2. Charge cycle of Li battery is shorter than super capacitor, i.e. Li battery fails much earlier than super capacitor.
3. Working temperature range is not as wide as super capacitor.
4. Most importantly, Li battery poses fire risk, meanwhile, super capacitor is 100% safe to use.

Active cigarette lighter: Still supply power after car engine is off.

COXPAL 3-wire hardwire kit:

VCC = yellow wire = constant 12V output.

ACC = red wire = output 12V only when car engine is on.

Does parking monitor drain car battery?

The probability of car battery being drained by our dash cam is quite rare because there are 2 protections.

- Guard Time by the camera, typical capacity of car battery is about 45-65AH (at 100% charge), take max guard time 24H for example, the max power consumption of our dash cam in parking mode as below:

	Dual Channel	Real Cam Off
Time Lapse 1FPS	10AH	6AH
FHD@30FPS	9AH	5AH

- Auto Cut-off by the hardwire kit, it will automatically cut off power if it detects car battery voltage lower than 11.9V/23.9V:

STATE OF CHARGE > at rest > no load ModernSurvivalBlog.com

charge	V open circuit 6-V battery	V open circuit 12-V battery	V open circuit 24-V bank	V open circuit 48-V bank	specific gravity per cell
100%	6.37	12.73	25.46	50.92	1.28
90%	6.31	12.62	25.24	50.48	1.26
80%	6.25	12.50	25.00	50.00	1.24
70%	6.19	12.37	24.74	49.48	1.22
60%	6.12	12.24	24.48	48.96	1.20
50%	6.05	12.10	24.20	48.40	1.17
40%	5.98	11.96	23.92	47.84	1.15
30%	5.91	11.81	23.62	47.24	1.12
20%	5.83	11.66	23.32	46.64	1.10
10%	5.75	11.51	23.02	46.04	1.07

Source: https://modernsurvivalblog.com/alternative-energy/battery-state-of-charge-chart/

However, above 2 protections can't 100% protect car battery from draining because the battery can be drained by other factors, for example:

1. Car battery is old? i.e. It can be drained itself, even without any loading devices.
2. Car battery is poor quality?
3. Improper use pattern? For example, frequent short trips and idling which can cause car battery not fully charged.
4. Other in-car electronics consume car battery power as well.

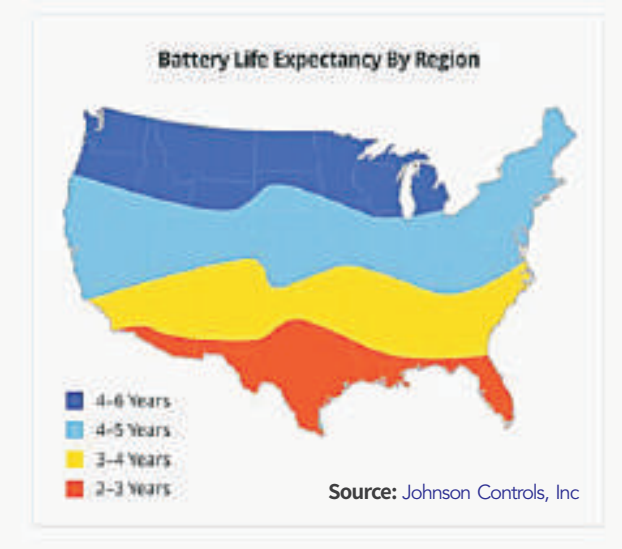

Please rest assured to use parking monitor:

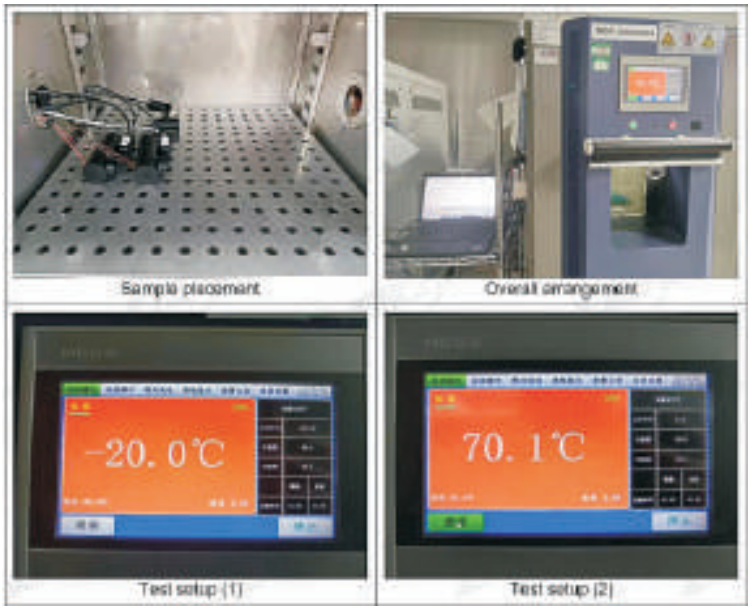

Our In-lab temperature testing is based on ambient tempeture
-20°C to 70°C
(-4°F to 158°F)

VS

The actual inside car temperature

Estimated Vehicle Interior Air Temperature vs. Elapsed Time						
Elapsed Time (minutes)	Outside Air Temperature (°F)					
	70	75	80	85	90	95
0	70	75	80	85	90	95
10	89	94	99	104	109	114
20	99	104	109	114	119	124
30	104	109	114	119	124	129
40	108	113	118	123	128	133
50	111	116	121	126	131	136
60	113	118	123	128	133	138
>60	115	120	125	130	135	140

Source: https://goodcalculators.com/inside-car-temperature-calculator/

9. Watch recordings via PC

1. By directly reading the microSD card with a card reader.
2. By directly connecting the camera to the computer via USB data cable.
3. Proprietary Mac & Windows COXPAL GPS media player is available, it is **free of charge:**
   - It supports play 2-channel simultaneously and it supports play GPS speed & trajectory.
   - The player can be downloaded from www.coxpal.com.
   - Or simply message to support@coxpal.com, we share Player download link to you directly.

10. Reset

Press left button and hold for 8 seconds and then the camera will start to reset automatically.

11. Firmware Upgrading

1. In APP Settings, you can find current firmware version No.
2. How to upgrade the firmware:

1). Copy the firmware (**.bin file**) into the **root directory** of the microSD card (FAT32 format is required);
2). Insert the microSD card into the camera;
3). Power on the camera, the camera will boot up automatically after upgrading successfully.

Note: DO NOT cut off power during the upgrading which may cause camera failure.

3. Always stay up-to-date

The latest firmware version is always available at the official website (www.coxpal.com).
We strongly recommend registering your product (www.coxpal.com) to receive notification messages when new firmware update available.

9 APP

We fully understand how important a usable APP is for you!

APP user experience is one of our most concerning parts, if you have any questions or problems about using our APP, please feel free to contact us via support@coxpal.com, we can assist you to solve the problem for sure, meanwhile, you can **gain a chance to get a mysterious gift if you helped find the bug.**

WiFi dash cam means direct connection between the camera and the phone, wirelessly, it can **NOT** realize remote monitor and cloud storage, WiFi dash cam is different to IP camera and cloud dash cam:

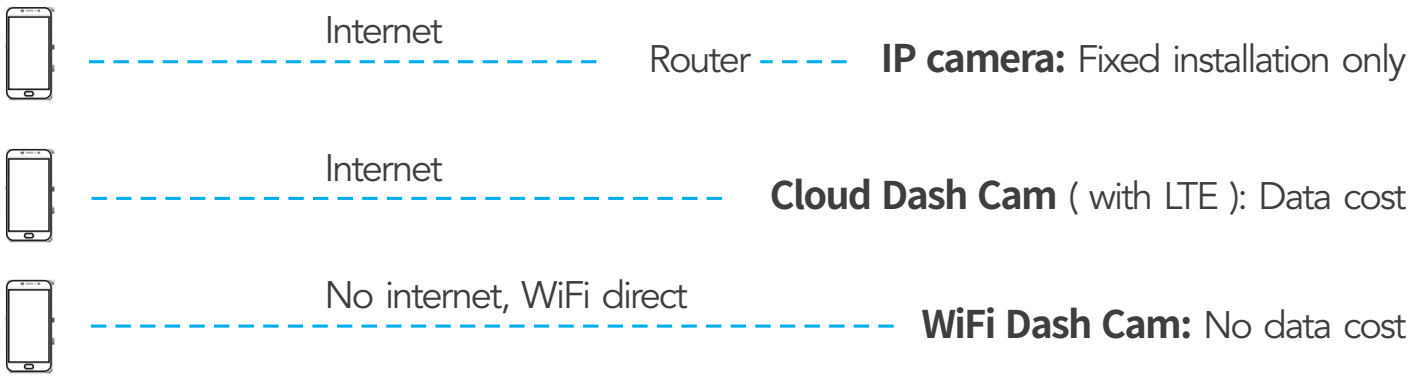

- **iPhone:** Although WiFi doesn't provide internet, Mobile Data can be simultaneously used to provide internet.
- **Android phone:** Some android phones don't support use WiFi and Mobile Data simultaneously, accordingly, the phone will have no internet access when dash cam WiFi is connected. We understand it is a little frustrating but dash cam WiFi only needs to be connected in a short period.

We take **user privacy** very seriously. COXPAL APP requires basic permissions only, please rest assured to use it.

APP is NOT designed for all time connection, for most of the time, just let the camera record alone. You only need to connect it when you need, for example, download a few important video clips to the phone, in the car, directly and conveniently.

APP is NOT designed for bulk downloading. The ideal solution for bulk downloading is take out microSD card from camera, download to the computer directly. APP is NOT user-friendly for bulk downloading because:

- It is comparatively time-consuming;
- Phone storage space is another issue (a 5-minute 4K@30 video size is over 1GB).

APP runs slow?

Yes, dash cam APP indeed runs slow if we compare it with other daily used APPs. Because dash cam APP is a little different, it directly visits a large-capacity microSD card which with raw video files inside, buffering is inevitable.

Meanwhile, we also tested many other dash cam APPs, we have made some targeted optimizations to our APP, we are trying our best to make it more user-friendly as possible as we can.

1. Before connecting:

1. Download official "Coxpal" APP from either Google Play Store or Apple App Store, install it into your phone directly.
2. Enable camera WiFi: Press left button and hold 3 seconds to turn on camera WiFi.
3. Take the phone near the camera, i.e. in camera's WiFi signal coverage.
4. Turn off **CarPlay** or **Android Auto** if it is connected. We fully understand that it is frustrating that CarPlay or Android Auto has to be turned off firstly, because both dash cam and CarPlay or Android Auto use WiFi protocol. Luckily dash cam WiFi doesn't need to be connected for most of the time.

2. Connecting:

- Launch Coxpal APP ⟶ Click "Connect the camera" red button ⟶ WLAN networks ⟶ Find **Coxpal** and input password "**doourbest**" ⟶ Back to Coxpal APP ⟶ It will show "Enter" green button.

If default password modified:

Please "forget" camera's existing network name firstly, then input new password.

If forget password:

Please press and hold left button 8 seconds to reset camera, then input default password.

For Android

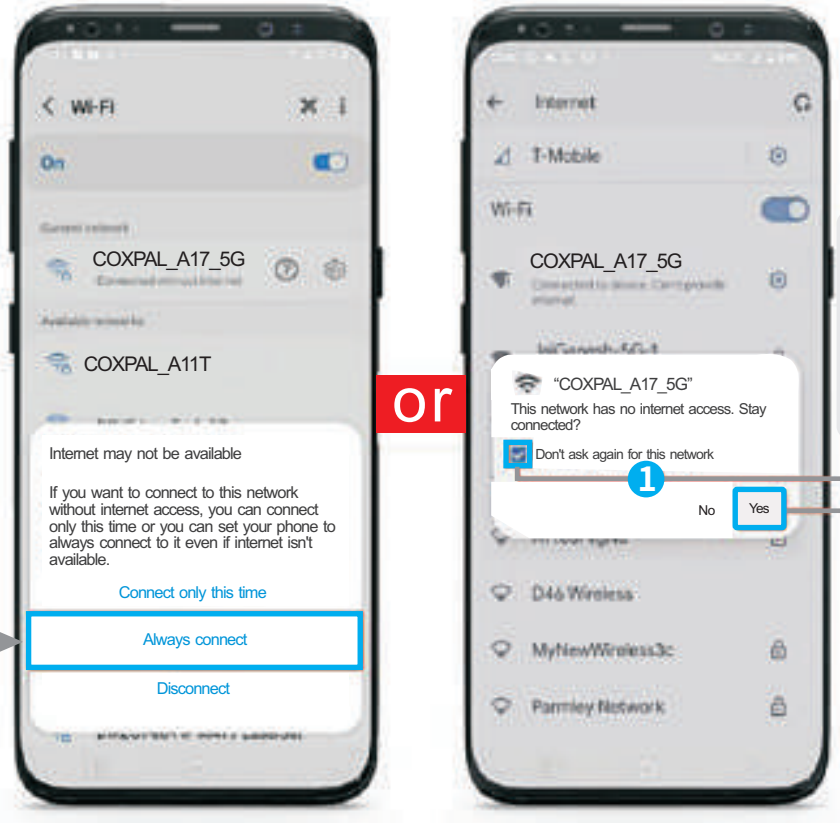

If this pop up shows up, make sure to select "Always Connect"

If this pop up shows up, make sure to select "Don't ask again" and then select "YES"

For iPhone

For iPhone, it will display or show "**No Internet Connection**", which is normal and you can ignore this message.

As COXPAL_A17_5G does NOT provide the internet, so the iPhone will show this message. You are only making a connection between your iPhone and COXPAL_A17_5G using the WiFi.

Once you see this ✓ Blue Check Mark, you are connected to the COXPAL_A17_5G. You can simply proceed to launch COXPAL Dash Cam APP accordingly.

If can't connect:

iPhone	Disable **Wi-Fi Assist** Settings on your iPhone: Settings → Cellular→ Wi-Fi Assist. This is a feature that automatically use Mobile Data when it detects current Wi-Fi connectivity is poor.
Android	Disable **Smart Network Switch** or **WLAN+** or **Intelligent Network Switch** or other similar names on your android phone: Settings → Wi-Fi → Advanced or More WLAN Settings. This is a feature that detects whether current Wi-Fi connection is stable or without internet connection. Once the smartphone identifies that current Wi-Fi network is unstable or does not have internet, it will automatically switch to Mobile Data.
Other reasons	1. APP permissions are all enabled? If no, please enable all permissions then try again. 2. Firewall/Antivirus programme is installed that blocked the connection? If yes, please temporarily disable it and then try again. 3. VPN is being used? If yes, please temporarily disable it and then try again.

3. Use APP

1. Preview

   To stream real-time video smoothly, the image in "Preview" is compressed but **not original resolution**, watch original video in either "Playback" or "Album".

   If no live image in Preview: Please turn off Cellular Data (or Wireless Data, or Mobile Data), or turn on Airplane Mode (Or Flight Mode) directly and then try again.

   This icon at the top right corner means Disconnect WiFi Connection.

2. Playback

   Video clip which is downloaded from "Playback" will be automatically saved into APP's "Album".

   If 4K video play is not smooth in Playback: Playing 4K video on a phone without lagging can be challenging due to the high resolution and bitrate requirements. The key factors enabling smooth 4K video playback are the advanced processors, ample RAM of the phone. Generally speaking, not too old iPhones and flagship android phones are capable of playing 4K video smoothly.

If can't download in Playback:

- Please check if COXPAL APP permissions are all enabled?
- Please check if the phone has available storage space to store the target download video file?

If blank in Playback: Possibly there are other files in microSD card or changed the default file folder structure that APP can't visit microSD card successfully, please format microSD card and then try again.

3. Album

To play video files with GPS information, disconnect with the camera and connect with internet is required. There are 2 useful functions in "Album":

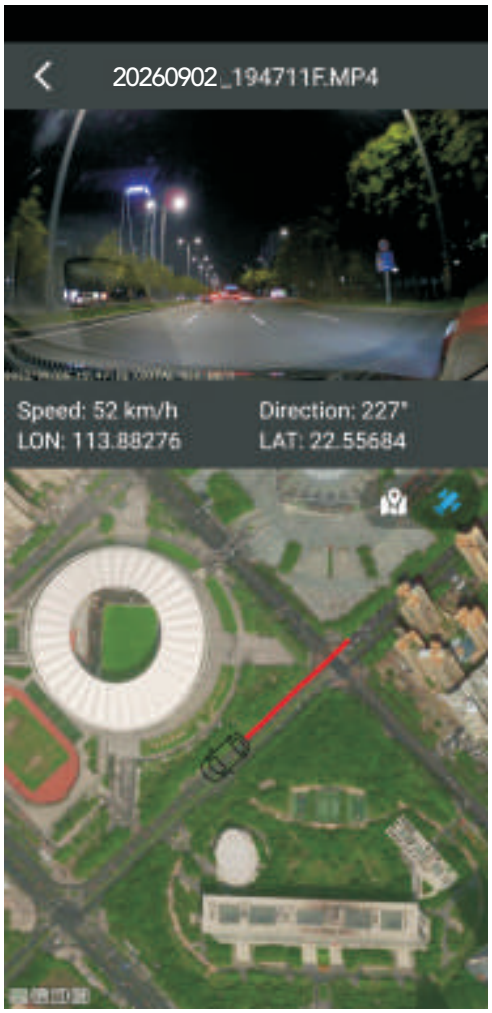

GPS Viewer

To view the speed and the trajectory conveniently.

Video Crop

To cut video to any shorter lengths and then share it to your social networks conveniently.

10 Specifications

The specifications of this product hereunder may change without prior notice due to product improvements.

Model No	COXPAL A17S(D)
Main Processor	Novatek NT98529
Front Image Sensor	Sony IMX678 Starvis 2.0 8-mega pixel CMOS
Rear Image Sensor	Galaxycore GC4653 4-mega pixel CMOS
Front Lens	F1.8; 140° FOV; 7-glass; 1 infrared filter
Rear Lens	F1.8; 140° FOV; 6-glass; 1 infrared filter
G-sensor	Built-in; 3-axis; sensitivity 3-level adjustable
GPS	Built-in
WiFi	2.4GHz & 5.0GHz Dual Band
System Language	English/Español/Deutsch/Русский/简体中文/日本語
Video (.mp4 format)	4K@30 front + 2K@30 rear 2K@30 front + 2K@30 rear 4K@30 front 2K@30 front
Audio	Built-in microphone & speaker
Storage	By external SDHC microSD; Up to 512GB; UHS-1 U3; in FAT32
Battery	No, but built-in 85°C 5.5V 2*7F supercapacitor
Power Input	5Vdc/2A
Power Interface	USB Type-C
Working Temperature	-4° to 158°F (-20° to 70°C)
Storage Temperature	-4° to 176°F (-20° to 80°C)

11 FAQs

1. Q: Why my SD card doesn't work with this camera but it works with other cameras?

   A: Different cameras or different applications requires different writing speed, the better image quality recorded, the faster writing speed required.

2. Q: Why my Mac computer can't format SD card to FAT32 or can't read FAT32?

   A: FAT32 is an universal format that is compatible with Mac, Windows, Linux and DOS, you could search "Format SD card to FAT32 with a Mac" or "convert Mac hard drive to FAT32 by using Disk Utilities" to learn how to do it.

3. Q: Why can't make out license plate?

   A: See license plate clearly or not depends on various factors such as resolution, weather, distance, speed and so on, by and large, almost all dash cameras adopts non-zoom lens with fixed focal distance, therefore, the farther away the target vehicle and the wider viewing angle of the camera, the less pixels averaged to the target vehicle's license plate.

4. Q: Which one is better? With display screen or without display screen?

   A: Each has its pros and cons. The advantages of "no display screen" are: 1). Not obstructive; 2). Can be well hidden behind the rearview mirror; 3). Lower camera power consumption a bit which is good for camera's lifespan.

5. Q: The wider viewing angle of the camera. the better?

   A: Yes and No, Yes because it has wider coverage; No because the bigger image distortion due to the fisheye lens, and also the less pixels averaged to each details.

6. Q: Which one is better? Suction cup mount or adhesive mount?

   A: Each has its pros and cons, but judged from the perspective of getting better image, adhesive mount is undoubtedly the better choice because it can minimize the unnecessary shaking.

7. Q: Do we need to worry the safety of the camera especially when it gets hot?

   A: No need to worry at all, unlike the camera with built-in Li battery, the camera is absolutely safe and no risk of fire and explosion because of its built-in supercapacitor, furthermore, product is backed by 1 year warranty, please rest assured to use it.

This product complies with the radio interference requirements of the European Community. Operating Frequency Range: 2400-2483.5 MHz; Max Output Power: 15 dBm

This product is designed and manufactured with high quality materials and components, which can be recycled and reused.

This symbol means the product must not be discarded as household waste, and should be delivered to an appropriate collection facility for recycling. Follow local rules and never dispose of the product and rechargeable batteries with norma household waste.

FCC Statement

This device complies with Part 15 of the FCC Rules. Operation is subject to the following two conditions: (1) This device may not cause harmful interference, and (2) This device must accept any interference received, including interference that may cause undesired operation.

Warning: Changes or modifications not expressly approved by the party responsible for compliance could void the user's authority to operate the equipment.

Note: This equipment has been tested and found to comply with the limits for a Class B digital device, pursuant to Part 15 of the FCC Rules. These limits are designed to provide reasonable protection against harmful interference in a residential installation.

This equipment generates, uses and can radiate radio frequency energy and, if not installed and used in accordance with the instructions, may cause harmful interference to radio communications. However, there is no guarantee that interference will not occur in a particular installation. If this equipment does cause harmful interference to radio or television reception, which can be determined by turning the equipment off and on, the user is encouraged to try to correct the interference by one or more of the following measures:

(1) Reorient or relocate the receiving antenna.

(2) Increase the separation between the equipment and receiver.

(3) Connect the equipment into an outlet on a circuit different from that to which the receiver is connected.

(4) Consult the dealer or an experienced radio / TV technician for help.

FCC Radio Frequency Exposure Statement

This equipment must be installed and operated in accordance with provided instructions and the antenna(s) used for this transmitter must be installed to provide a separation distance of at least 20 cm from all persons and must not be co-located or operating in conjunction with any other antenna or transmitter.

Apple and the Apple logo are trademarks of Apple Inc., registered in the U.S. and other countries. App Store is a service mark of Apple Inc., registered in the U.S. and other countries.

Google Play and the Google Play logo are trademarks of Google Inc.

'Android" is a registered trademark of Google Inc. in the United States and other countries.

"iOS" is a registered trademark of Apple Inc. in the United States and other countries.

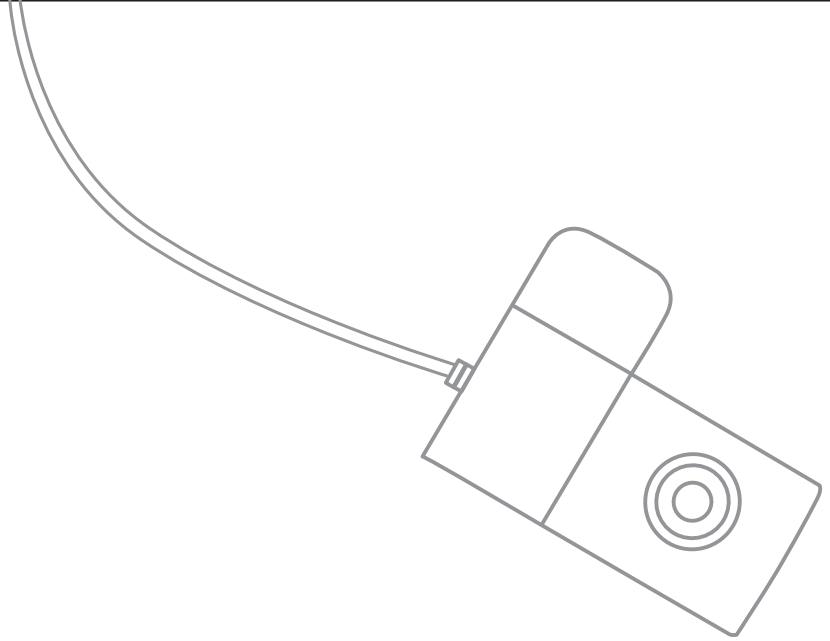

COXPAL

www.coxpal.com

Made in China