Description:

Wireless charger for smart phones conforming to the QI-standard.
Easy to charge your phone without cables, just put your phone on the charging plate.

Specifications:

Input: please refer to the printing on the back cover of the charging plate.
Compatible with the QI-standard.

Power supply:

Qualified AC adapter is strongly recommended.

Video for operation instruction

Please scan the QR code

15W

Magnetic wireless car charger
Compatible with 10W/7.5W/5W

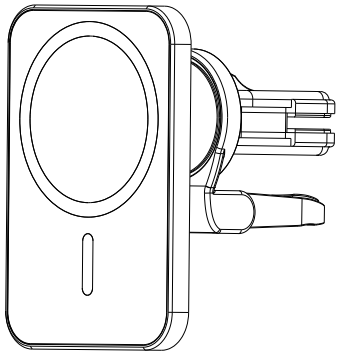

正面

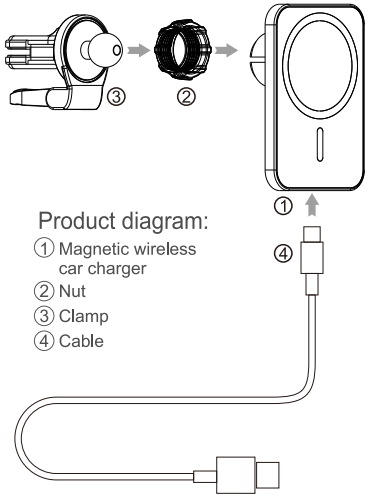

Product diagram:

① Magnetic wireless car charger
② Nut
③ Clamp
④ Cable

Specifications:

- Input interface: USB Car charger
- Input: 9V⎓2A, 5V⎓2.4A
- Output:15W/10W/7.5W/5W
  (charging power depends on mobile model)

Product List:

- Magnetic wireless car charger x1
- Cable x1
- Manual x1
- Certification of qualification x1
- Warranty card x1

*Please use the car charging power source in accordance with the national standard with this product.
*Operation Standard:GB4943.1-2011

Warning: For safety, please do not use this product in high temperature and short circuit, please do not drop this product, please do not put this product into the fire;
In addition to the mobile phone with magnetic suction function , users please buy special magnetic suction mobile phones protective cover for other mobile phones to support use.

背面

85.00 mm

64.00 mm

FCC STATEMENT :
This device complies with Part 15 of the FCC Rules. Operation is subject to the following two conditions:
(1)This device may not cause harmful interference, and
(2)This device must accept any interference received, including interference that may cause undesired operation.
Warning: Changes or modifications not expressly approved by the party responsible for compliance could void the user's authority to operate the equipment.

NOTE: This equipment has been tested and found to comply with the limits for a Class B digital device, pursuant to Part 15 of the FCC Rules. These limits are designed to provide reasonable protection against harmful interference in a residential installation. This equipment generates uses and can radiate radio frequency energy and, if not installed and used in accordance with the instructions, may cause harmful interference to radio communications. However, there is no guarantee that interference will not occur in a particular installation. If this equipment does cause harmful interference to radio or television reception, which can be determined by turning the equipment off and on, the user is encouraged to try to correct the interference by one or more of the following measures:
Reorient or relocate the receiving antenna.
Increase the separation between the equipment and receiver.
Connect the equipment into an outlet on a circuit different from that to which the receiver is connected.
Consult the dealer or an experienced radio/TV technician for help.

FCC Radiation Exposure Statement:
This equipment complies with FCC radiation exposure limits set forth for an uncontrolled environment. This equipment should be installed and operated with minimum distance 20cm between the radiator & your body.