User Manual

for Solis battery ready split phase inverters

Applicable models

S6-ER1P5K02-NV-ND-H-US
S6-ER1P7.5K03-NV-ND-H-US
S6-ER1P7.6K03-NV-ND-H-US
S6-ER1P9.9K04-NV-ND-H-US
S6-ER1P10K04-NV-ND-H-US
S6-ER1P11.4K04-NV-ND-H-US

Applicable System

Split Phase System

Version 1.0, Release Date: 08,2024

Contents

1. Introduction 3
1.1 Product Description 3
1.2 Packaging 4
1.3 Storage 4
2. Safety & Warning 5
2.1 Safety Symbols 5
2.2 General Safety Instructions 5
2.3 Notice For Use 6
3. Overview 7
3.1 Front Panel Display 7
3.2 LED Status Indicator Lights 7
3.3 Keypad 8
3.4 LCD 8
4. Installation 9
4.1 Select a Location for the Inverter 9
4.2 Mounting the Inverter 11
4.3 Electrical Connections 11
4.3.1 Terminal Connections 14
4.3.2 Connect PV Side of Inverter 15
4.3.3 Connect Grid Side of Inverter 15
4.3.4 Ground Connection 17
4.3.5 Max. Overcurrent Protection Device (OCPD) 17
4.3.6 Inverter Monitoring Connection 19
4.3.7 Module Level Rapid Shutdown (Optional) 20
4.3.8 Meter Connection(optional) 21
5. Start & Stop 22
5.1 Start-up procedure 22
5.2 Shutdown procedure 22
6. Operation 23
6.1 Pre-Commissioning Steps 23
6.2 Commissioning Procedure 23
7. Maintenance 51
8. Troubleshooting 52
9. Maintenance 56

1. Introduction

1.1 Product Description

Solis battery ready split phase inverter can operate like a normal grid tied PV inverter to convert PV power into AC power and feed into the grid. It can also connect with battery to form a hybrid system.

Solis battery ready split phase inverters consists of the following models:
S6-ER1P5K02-NV-ND-H-US, S6-ER1P7.5K03-NV-ND-H-US,
S6-ER1P7.6K03-NV-ND-H-US, S6-ER1P9.9K04-NV-ND-H-US,
S6-ER1P10K04-NV-ND-H-US, S6-ER1P11.4K04-NV-ND-H-US

Figure 1.1 Front side view

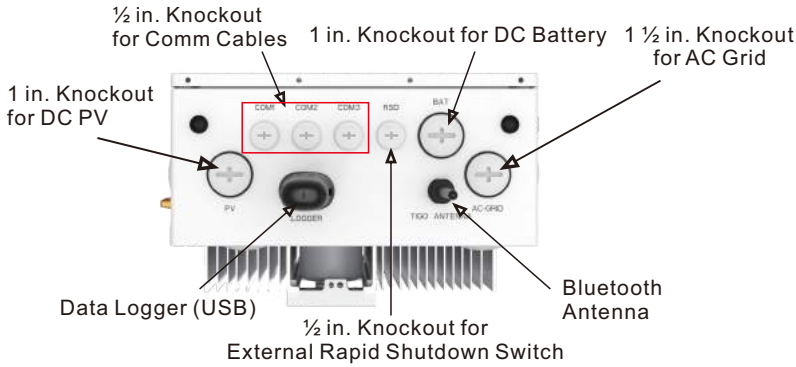

Figure 1.2 Bottom side view

1.2 Packaging

When you receive the inverter, ensure that all the parts listed below are included:

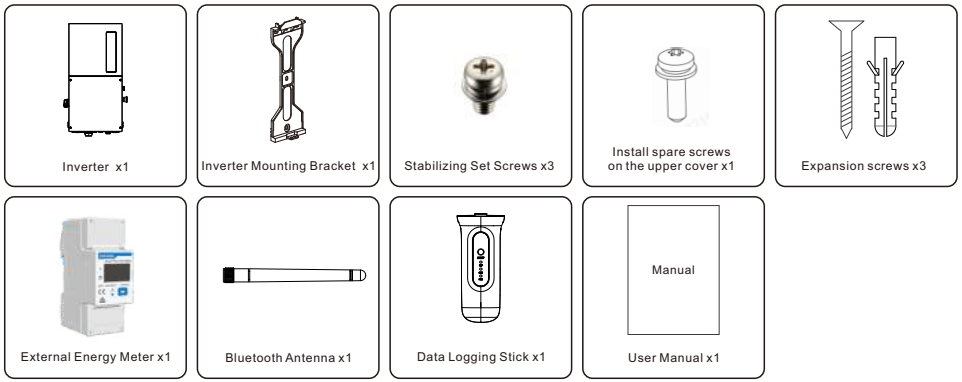

1.3 Storage

If the inverter is not installed immediately, storage instructions and environmental conditions are below:

- Use the original box to repackage the inverter, seal with adhesive tape with the desiccant inside the box.
- Store the inverter in a clean and dry place, free of dust and dirt. The storage temperature must be between 40~176°F and humidity should be between 0 to 95%, non-condensing.
- Do not stack more than four (4) inverters high on a single pallet.
- Keep the box(es) away from corrosive materials to avoid damage to the inverter enclosure.
- Inspect the packaging regularly. If packing is damaged (wet, pest damages, etc.), repackage the inverter immediately.
- Store inverters on a flat, hard surface -- not inclined or upside down.
- After 100 days of storage, the inverter and carton must be inspected for physical damage before installing. If stored for more than 1 year, the inverter needs to be fully examined and tested by qualified service or electrical personnel before using.
- Restarting after a long period of non-use requires the equipment be inspected and, in some cases, the removal of oxidation and dust that has settled inside the equipment will be required.

SAVE THESE INSTRUCTIONS – This manual contains important instructions for Models S6-ER1P5K02-NV-ND-H-US, S6-ER1P7.5K03-NV-ND-H-US, S6-ER1P7.6K03-NV-ND-H-US, S6-ER1P9.9K04-NV-ND-H-US, S6-ER1P10K04-NV-ND-H-US, S6-ER1P11.4K04-NV-ND-H-US that shall be followed during installation and maintenance of the inverter.

2. Safety & Warning

2.1 Safety Symbols

Safety symbols used in this manual, which highlight potential safety risks and important safety information, are listed as follows:

WARNING:
WARNING symbol indicates important safety instructions, which if not correctly followed, could result in serious injury or death.

NOTE:
NOTE symbol indicates important safety instructions, which if not correctly followed, could result in some damage or the destruction of the inverter.

CAUTION:
CAUTION, RISK OF ELECTRIC SHOCK symbol indicates important safety instructions, which if not correctly followed, could result in electric shock.

CAUTION:
CAUTION, HOT SURFACE symbol indicates safety instructions, which if not correctly followed, could result in burns.

2.2 General Safety Instructions

WARNING:
Do not connect PV array positive(+) or negative(-) to ground, it may cause serious damage to the inverter.

WARNING:
Electrical installations must be done in accordance with the local and national electrical safety standards.

WARNING:
To reduce the risk of fire, over-current protective devices (OCPD) are required for circuits connected to the Inverter.
The DC OCPD shall be installed per local requirements. All photovoltaic source and output circuit conductors shall have disconnects that comply with the NEC Article 690, Part II. All Solis single phase inverters feature an integrated DC switch.

2. Safety & Warning

CAUTION:
Risk of electric shock. Do not remove cover. There is no user serviceable parts inside. Refer servicing to qualified and accredited service technicians.

CAUTION:
The PV array (solar panels) supplies a DC voltage when they are exposed to sunlight.

CAUTION:
Risk of electric shock from energy stored in capacitors of the inverter. Do not remove cover for 5 minutes after disconnecting all power sources(service technician only). Warranty may be voided if the cover is removed without unauthorized .

CAUTION:
The surface temperature of the inverter can reach up to 75 (167 F).
To avoid risk of burns, do not touch the surface of the inverter while it's operating.
Inverter must be installed out of the reach of children.

2.3 Notice For Use

The inverter has been constructed according to the applicable safety and technical guidelines. Use the inverter in installations that meet the following specifications ONLY:

1.Permanent installation is required.

2.The electrical installation must meet all the applicable regulations and standards.

3.The inverter must be installed according to the instructions stated in this manual.

4.The inverter must be installed according to the correct technical specifications.

5.To startup the inverter, the Grid Supply Main Switch (AC) must be switched on, before the solar panel's DC isolator shall be switched on. To stop the inverter, the Grid Supply Main Switch (AC) must be switched off before the solar panel's DC isolator shall be switched off.

3. Overview

3.1 Intelligent LED Indicators

There are five indicators on the The Solis S6 Series Inverter (Battery, Power, WiFi, Ethernet and Bluetooth) which indicate the working status of the inverter.
The Bluetooth antenna or WiFi datalogger shall be installed at the Antenna/COM port of the hybrid inverter before local debugging.

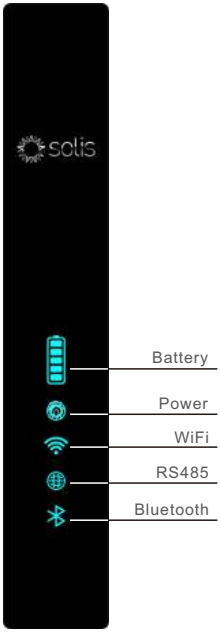

Light	Status	Description
Battery	Blue flashing every 3s	Battery discharging.
	Blue flashing every 1.5s	Battery charging.
	Blue solid ON	Idle.
	OFF	No battery or not working.
Power	Blue solid ON	Normally operating.
	Yellow solid ON	Warning.
	RedSolid ON or flashing every 3s	Alarm.
	OFF	No battery or not working.
WiFi	Blue solid ON	COM port is being used.
	OFF	COM port is not used.
RS485	Blue solid ON	RS485 port is being used.
	OFF	RS485 port is not used.
Bluetooth	Blue solid ON	Bluetooth port is being used.
	OFF	Bluetooth port is not used.

Turning On the LED Indicator Lights

After a few minutes, the LED indicator lights will turn off to save power.
To turn the lights back on, short-press the inverter LED light.

Alarm State

When the inverter has an alarm, the inverter LED light turns red and starts flashing. It is recommended to connect to the inverter with the Bluetooth tool. Then you can determine what the alarm code is.

NOTE:

Battery/WiFi/Ethernet/Bluetooth indicators will automatically turn off after 1 minute. The Power indicator will remain on with lower brightness. Short press the Power indicator will wake up all indicators.

3.2 Password Reset

When the password of the owner or the installer needs to be reset,please long press the Inverter indicator for 5s.
If the reset command is successfully triggered,the status indicator will be blue and blink for 3s at the frequency of 0.5s, then restore the original state of the indicator.
If the command fails to be triggered,the status indicator will be yellow and blink for 3s at the frequency of 0.5s,then restore the original state of the indicator.
If the command is successfully triggered,the Bluetooth password can be reset in the APP.

3.3 Inverter built-in Bluetooth description

Blueooth: BDR、EDR、BLE
frequency band(s) in which the radio equipment operates:2.402-2.480GHZ
Maximum transmitting power: 8dBm
Hereby, Ginlong Technologies Co.,Ltd.declares that the radio equipment type hybrid inverter is in compliance with Directive 2014/53/EU

4. Installation

4.1 Select a Location for the Inverter

To select a location for the inverter, the following criteria should be considered:

WARNING: Risk of fire

Despite careful construction, electrical devices can cause fires.

- Do not install the inverter in areas containing highly flammable materials or gases.
- Do not install the inverter in potentially explosive atmospheres.

- Do not install in small closed spaces where air can not circulate freely. To avoid overheating, always make sure the flow of air around the inverter is not blocked.
- Exposure to direct sunlight will increase the operational temperature of the inverter and may cause output power limiting. Ginlong recommends inverter installed to avoid direct sunlight or raining.
- To avoid over heating ambient air temperature must be considered when choosing the inverter installation location. Ginlong recommends using a sun shade minimizing direct sunlight when the ambient air temperature around the unit exceeds 104°F/40°C.

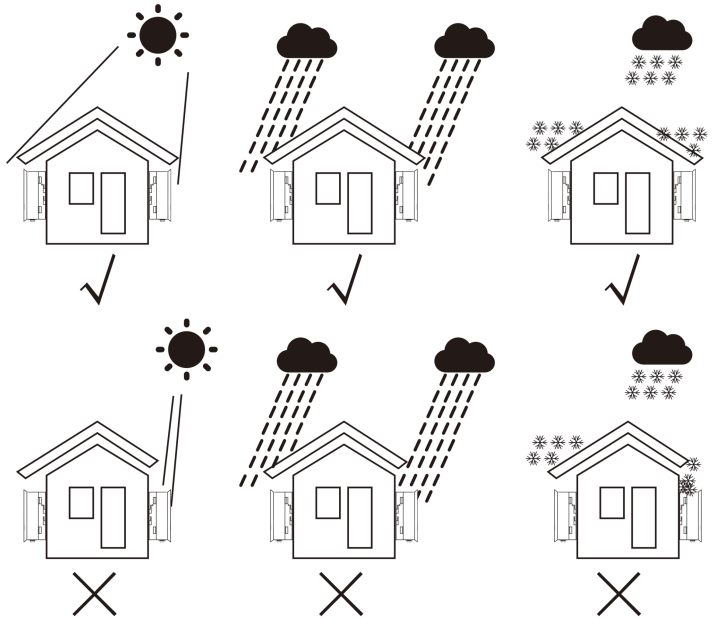

Figure 4.1 Recommended installation position

- Install on a wall or strong structure capable of bearing the weight.
- Install vertically with a maximum incline of +/- 5°.If the mounted inverter is tilted to an angle greater than the maximum noted, heat dissipation will be inhibited, and may result in power limiting.
- When one or more inverters are installed in one location, a minimum of 12 inches of clearance should be kept between each inverter or other objects. The bottom of the inverter should have 20 inches of clearance to the ground.

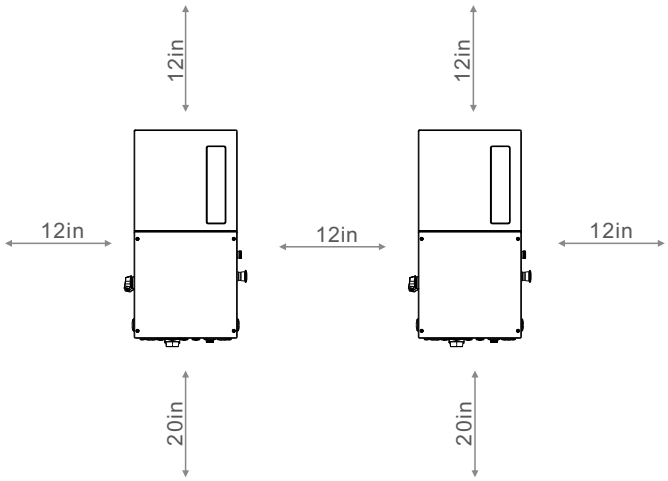

Figure 4.2 Inverter Mounting Clearance

- Visibility of the LED status indicator lights and the LCD located at the front panel of the inverter should be considered.
- Adequate ventilation must be provided if the inverter is to be installed in a confined space.

NOTE:
Nothing should be stored on or placed against the inverter.

4.2 Mounting the Inverter

Dimensions of mounting bracket:

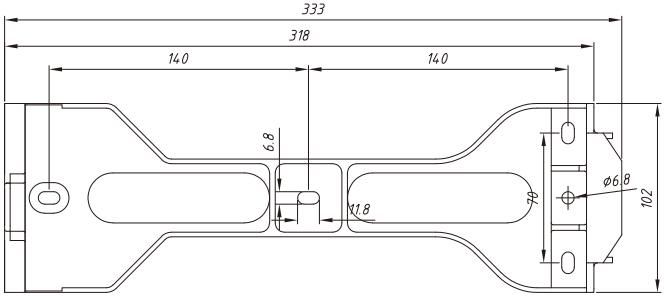

Figure 4.3 Inverter Wall Mounting

Please see Figure 4.4 and Figure 4.5 for instruction on mounting the inverter to a wall.

The inverter shall be mounted vertically. The steps to mount the inverter are listed below:

1. According to the figure 4.2, select the mounting height of the bracket and mark the mounting holes. For brick walls, the position of the holes should be suitable for the expansion bolts.

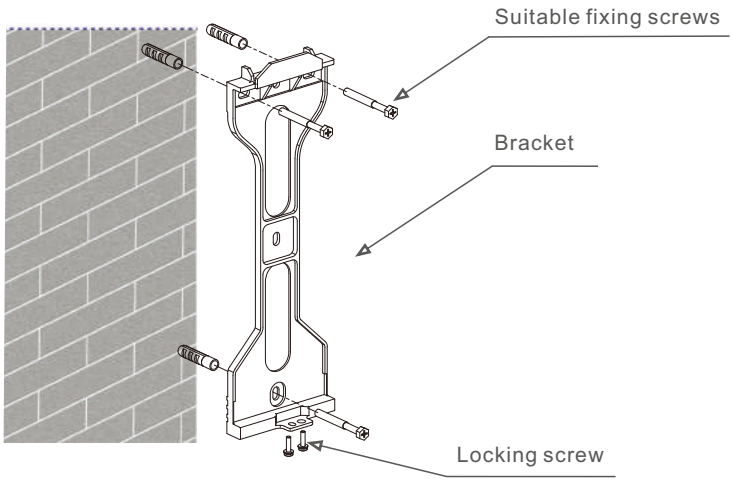

Figure 4.4 Inverter Wall Mounting

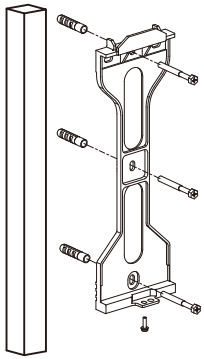

Figure 4.5 Inverter Pillar Mounting

2.Ensure the bracket is horizontal and the mounting holes (in Figure 4.4 and Figure 4.5) are marked correctly. Drill the holes into the wall or pillar at your marks.

3.Use the suitable screws to fix the bracket to the wall.

WARNING:
The inverter must be mounted vertically.

4.Lift up the inverter (be careful to avoid body strain), and align the back bracket on the inverter with the convex section of the mounting bracket. Hang the inverter on the mounting bracket and ensure the inverter is secure (see Figure 4.6)

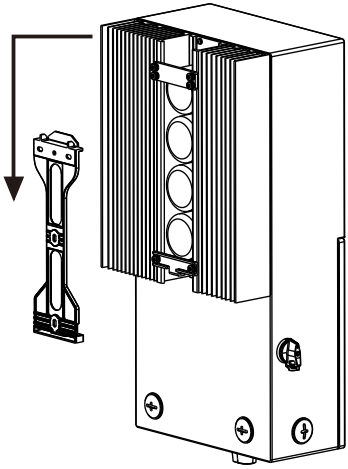

Figure 4.6 Wall Mount Bracket

5. Use screws to fix the bottom of the inverter to the mount bracket.

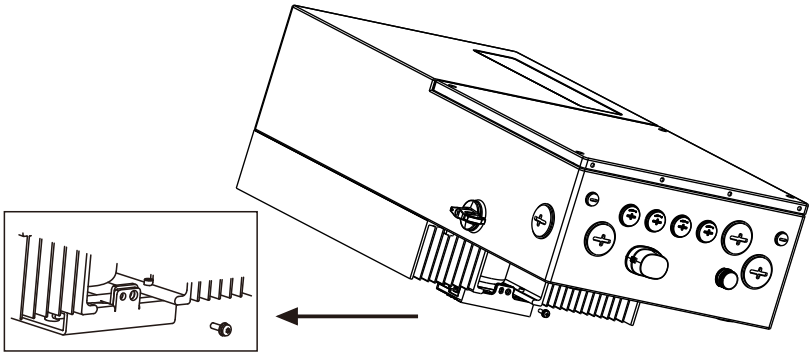

Figure 4.7 Fix the Inverter

The are two holes at the bottom of bracket, one to fix the inverter, another for the lock. **The diameter of the lock should be less than 0.27in (7mm).**

4.3 Electrical Connections

Before marking wire connections, unscrew the four screws on both sides of the wiring box, then remove the cover.

Press on the wiring box cover while loosening the screws.
This action will help to avoid damaging the screw threads.

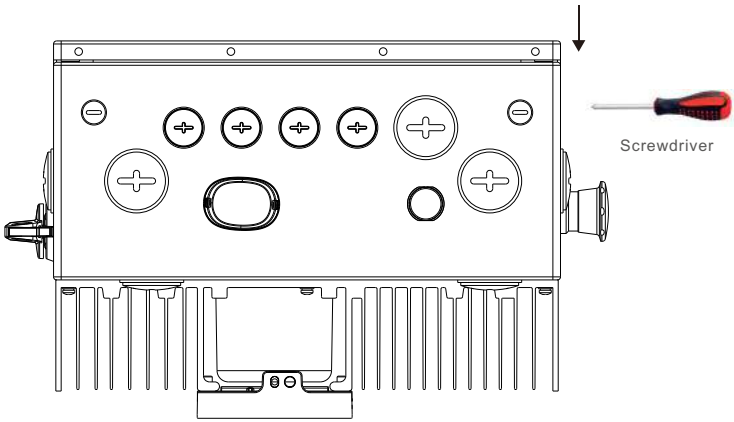

Figure 4.8 Bottom Side of Inverter

Before making electrical connections, double check to ensure the steps below are strictly followed:

a. Switch the Grid Supply Main Switch (AC) OFF.

b. Switch the DC Switch OFF.

Please see figure 4.9,there are four knockouts in the wiring box. The two knockouts on the left (bottom and side) are for the DC conduit entry. The two knockouts on the right (bottom and side) are for the AC conduit entry. All knockouts in the wiring box can accept trade size 1 inch (ID) conduit.

4.3.1 Terminal Connections

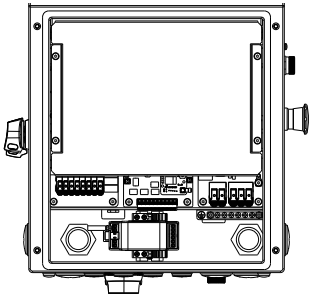

Figure 4.9 Connection Area of Inverter

Strip the end of the wire ¾" minimum to 1" maximum. Use a slotted (flat-blade) screwdriver, insert the screwdriver in Terminal A (top) and insert the wire into Terminal B (bottom) of the Rapid Termination wiring block. While holding the wire in place, remove the screwdriver and the Rapid Termination spring terminal block will fix the wire in place. Use the labels on the Rapid Termination wiring block to ensure proper polarity.

4.3.2 Connect PV Side of Inverter

Warning:
Before connecting inverter, ensure the PV array open circuit voltage is within the limit of the inverter. Otherwise the inverter could be damaged.

DO NOT connect the PV array positive or negative to ground.
This can cause serious damage to the inverter.

The inverter cannot accept PV strings wired in parallel.

Before connection, ensure the PV array strings are correct polarity and match the proper "DC+" and "DC-" symbols you will connect them to.

Use qualified DC cable for PV system.

Cable type	Cross section	
	Range	Recommended value
Industry generic PV cable (model:PV1-F)	4.0-6.0 (12-10AWG)	4.0 (12AWG)

Table 4.1 DC cable size

Damage to the DC disconnect due to enlarged knockouts.
Enlarged knockouts enable moisture to penetrate the DC disconnect which could damage electronic components in the DC Disconnect.

Please refer to figure 4.9, The acceptable wire size range is from 12 AWG to 10 AWG, copper conductors only; refer to local code for appropriate wire size.

CAUTION:
If DC inputs are accidently reversely connected or inverter is faulty or not working properly, it is NOT allowed to turn off the DC switch. Otherwise it may cause DC arc and damage the inverter or even lead to a fire disaster.
The correct actions are:
*Use a clip-on ammeter to measure the DC string current.
*If it is above 0.5A, please wait for the solar irradiance reduces until the current decreases to below 0.5A.
*Only after the current is below 0.5A, you are allowed to turn off the DC switches and disconnect the PV strings.
* In order to completely eliminate the possibility of failure, please disconnect the PV strings after turning off the DC switch to aviod secondary failures due to continuous PV energy on the next day.
Please note that any damages due to wrong operations are not covered in the device warranty.

4.3.3 Connect Grid Side of Inverter

The Solis Single Phase inverters can be connected to a 208V or 240V grid.
The default setting is for a 240VAC single phase grid.
Ground must be connect to the PE terminal.

Cable type	Cross section	
	Range	Recommended value
Industry generic grid cable	10-16mm² (8-6AWG)	10mm² (8AWG)

Table 4.2 Grid cable size

There are two cable connection point for each phase, one for grid, one for AC power of RSD.

GRID STANDARD	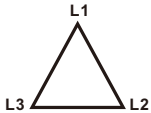					
	208V~ 3PH-△-3W			**240V~** SPLIT-PHASE		
TERMINAL	L1	L2	N	L1	L2	N
Connection requiement	Yes	Yes	No	Yes	Yes	No

Table 4.3 Grid Terminal Connection

4.3.4 Ground Connection

Internal ground connection point

Please see figure 4.9. Both DC and AC ground cable can be connect to ground terminal above DC switch. The acceptable wire size for ground is **12AWG to 4 AWG.** The torque setting is 26 in-lbs (3 Nm) .

4.3.4 Ground Connection

Internal ground connection point

Please see figure 4.10. Both DC and AC ground cable can be connect to ground terminal above DC switch. The acceptable wire size for ground is **12AWG to 4 AWG.** The torque setting is 26 in-lbs (3 Nm) .

Figure 4.10 Grounding Terminal on Heat-Sink

External ground connection point

An external ground connection is provided at the right side of the inverter.
Prepare OT terminals: M4. Use proper tooling to crimp the lug to the terminal.
Connect the OT terminal with ground cable to the right side of the inverter.
The torque setting is 20 in-lbs (2Nm).

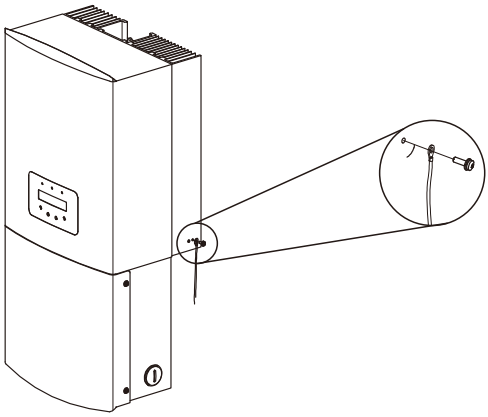

Figure 4.11 Connect the External Grounding Conductor

4.3.5 Max. Overcurrent Protection Device (OCPD)

To protect the inverter's AC grid connection conductors, Solis recommends installing breakers that will protect against overcurrent. The following table defines OCPD ratings for the Solis ingle phase inverters.

Inverter Model	Rated voltage(V)	Max. output current (A)	Current for protection device (A)
S6-ER1P5K02-NV-ND-H-US	240/208	20.8/24.0	30/30
S6-ER1P7.5K03-NV-ND-H-US	240/208	31.3/36.1	40/50
S6-ER1P7.6K03-NV-ND-H-US	240/208	31.7/36.5	40/50
S6-ER1P9.9K04-NV-ND-H-US	240/208	41.3/47.6	60/60
S6-ER1P10K04-NV-ND-H-US	240/208	41.7/48.1	60/70
S6-ER1P11.4K04-NV-ND-H-US	240/208	47.5/54.8	60/70

Table 4.4 Rating of Grid OCPD

4.3.6 Inverter Monitoring Connection

The inverter can be monitored via Wi-Fi or Cellular.
All Solis communication devices are optional (Figure 4.12).
For connection instructions, please refer to the Solis Monitoring Device installation manuals.

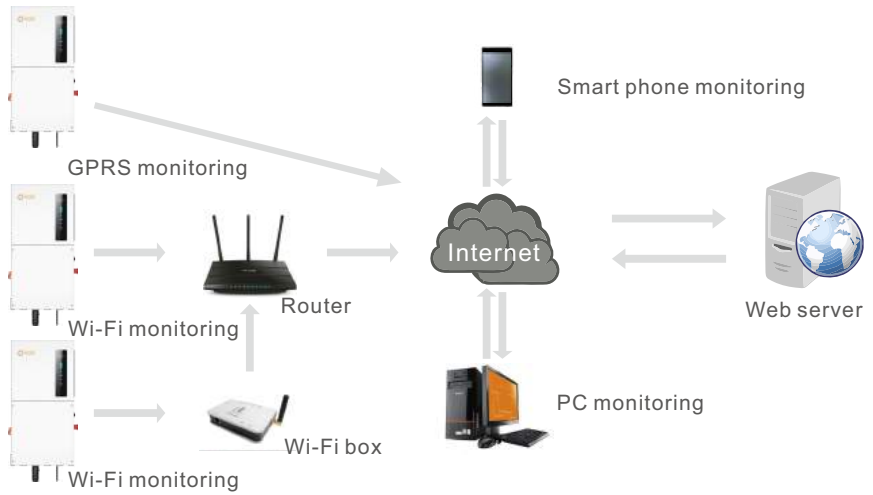

Figure 4.12 Wi-Fi Communication Function

4.3.7 Module Level Rapid Shutdown (Optional)

For systems that are required to meet NEC 2017 NEC 690.12, Solis has an optional Module Level Rapid Shutdown. This product provides a panel level shutdown feature that brings the panel voltage to a safe level in case of a disaster situation.
This function is vital for the safety of firefighters and relevant personnel.

4.3.8 Meter Connection(optional)

The inverter can work with a split phase smart meter to achieve Export Power Management function.

Below is the connection diagram.

Detailed settings please refer to Section 6.5.11.

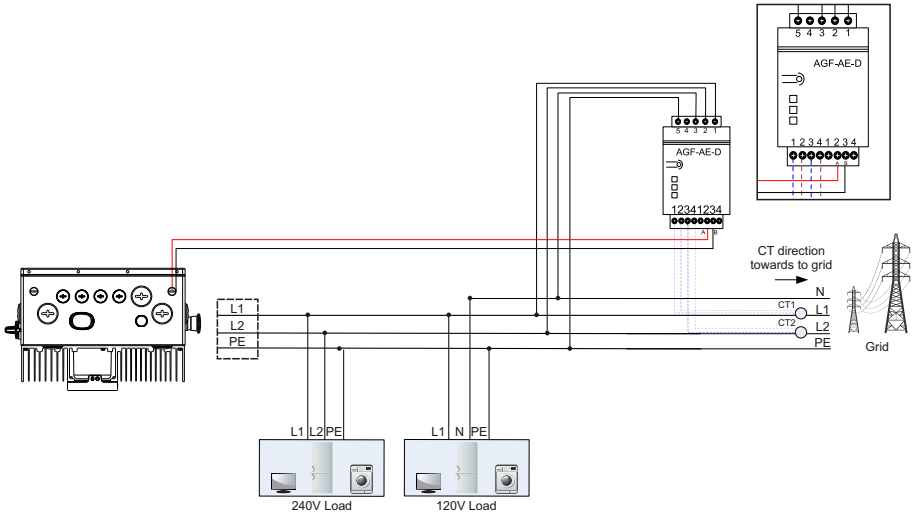

Figure 4.13 Direct Insert Type Meter - “Meter in Grid”

5. Start & Stop

5.1 Start-up procedure

To start-up the inverter, it is mandatory that the steps below are followed in the exact order outlined.

1. Ensure the commissioning checks in Section 5 have been performed.
2. Switch the AC switch ON.
3. Switch the DC switches ON one at a time. If the PV array (DC) voltage is higher than the inverter start-up voltage, the inverter will turn on. The red DC POWER LED and LCD will be continuously lit.
4. Solis inverters are powered from the DC side. When the inverter detects DC power that is within start-up and operating ranges, the inverter will turn on. After turn-on, the inverter will check internal parameters, sense and monitor AC voltage, hertz rate and the stability of the supply grid. During this period, the green OPERATION LED will flashand the LCD screen will show INITIALIZING. This tells the operator that the inverter is preparing to generate AC power.
5. After the locally mandated delay (300 seconds for IEEE-1547 compliant inverters), the inverter will start generating AC power. The green OPERATION LED will light continuously and the LCD screen will show GENERATING.

CAUTION

The inverter's surface temperature can reach up to 75℃ (167^{0} F). To avoid risk of burns, do not touch the surface when the inverter is in the operational mode. Additionally, the inverter must be installed out of the reach of children.

5.2 Shutdown procedure

To stop the inverter, it is mandatory that the steps below are followed in the exact order outlined.

1. Select "Grid Off" in the Advanced Setting of Inverter LCD.
2. Turn off the AC Switch between Solis inverter and Grid.
3. Wait approximately 30 seconds (during this time, the AC side capacitors are dissipating energy). If the inverter has DC voltage above the start-up threshold, the red POWER LED will be lit. Switch the DC switch OFF.
4. Confirm all LED's switch OFF (~one (1) minute).

CAUTION

Although the inverter DC disconnect switch is in the OFF position and all the LED's are OFF, operators must wait five (5) minutes after the DC power source has been disconnected before opening the inverter cabinet. DC side capacitors can take up to five (5) minutes to dissipate all stored energy.

6.1 Pre-Commissioning Steps

- Visually inspect each piece of equipment in the system closely.
- Check all conduit and cable connection points to ensure they are tight.
- Verify that all system components have adequate space for ventilation.
- Follow each cable to ensure that they are all terminated in the proper places.
- Ensure that all warning signs and labels are affixed on the system equipment.
- Verify that the inverter is secured to the wall and is not loose or wobbly.
- Prepare a multimeter that can do both AC and DC amps
- Have an Android or Apple mobile phone with Bluetooth capability
- Install the Soliscloud app on the mobile phone if you do not have it already
  There are three ways to download and install the latest app:
  1. You can visit **www.soliscloud.com**
  2. You can search "**Soliscloud**" in Google Play or App Store.
  3. You can scan this QR code to download **Soliscloud**.
- Register a new account with SolisCloud if you have not done so already. There are two account types available:

Organization: for installers, technicians, and any third-party that is not the direct owner of the home where the system is installed. This is for fleet management. Organization accounts are able to remotely control systems through SolisCloud.

Owner: for homeowners who typically only have a small number of sites and are only looking to monitor their system(s).

6.2 Commissioning Procedure

Once the equipment has been fully installed and an account for SolisCloud has been registered, the commissioning process can begin. This manual will explain steps 1 through 6. For steps 7 and 8, please see the manual for the Solis cellular data logger. The steps are the same for the other types of Solis data loggers.

Step 1: Verify the DC and AC voltages

Step 2: Connect to the inverter with the SolisCloud app

Step 3: Update the inverter firmware

Step 4: Configure the initial settings: time, battery, meter, grid standard, work mode

Step 5: Configure optional settings: export power, AC-coupling, parallel, generator

Step 6: Turn the inverter on

Step 7: Connect a Solis logger

Step 8: Create a plant on SolisCloud

Scan for the Solis cellular data logger manual

Step 1: Verify the AC and DC voltages

Use a multimeter to measure the PV string voltages in free air. Then land them, turn on the grid-side AC breaker, keep the DC switch turned off, then measure the voltages again. Verify that the polarities are correct. Also check the AC voltages from the grid and the battery DC voltage/polarity.

Step 2: Connect to the inverter with the SolisCloud application

Turn your phone Bluetooth on and then open the SolisCloud app. Tap *Service,* then tap *Local Operation*, and then tap *Connect with Bluetooth*.

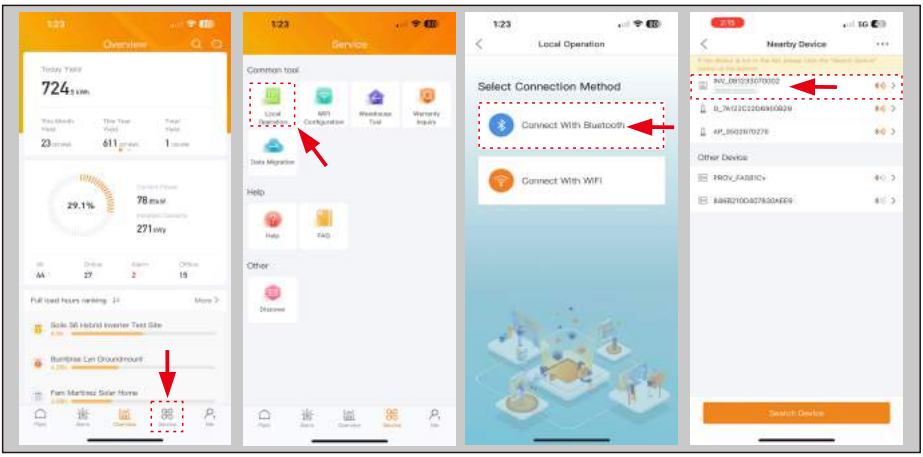

The name of the inverter Bluetooth network will display as “INV_” and then the inverter serial number. Tap on inverter to connect to it. The next screen will prompt you to create a six-character password. The password must be exactly six characters. Once you set the password, tap *Set Password*. It is highly recommended to save this password somewhere in case anyone ever returns to the site in the future. You should then see the message “Connection succeeded’ and then you will be at the main interface page.

Step 3: Upgrade the inverter firmware

Tap on *Setting* in the bottom right corner, then tap *Device Upgrade* at the bottom.

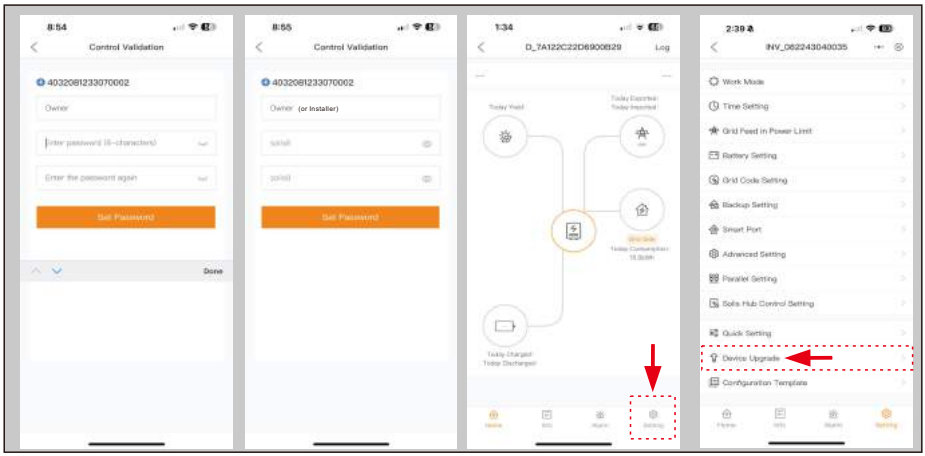

Set the AC bypass switch to the bypass position. Tap *Check the update* for HMI. A message will either prompt you to download and upgrade the new firmware version or it will inform you that the firmware is on the most current version. Wait for the firmware to finish downloading and then initiate the upgrade. Leave the SolisCloud app open until the update is complete. It could take between 10 &20 minutes to upgrade. Repeat the process for the DSP firmware. The total upgrade time can take up to 45 minutes.

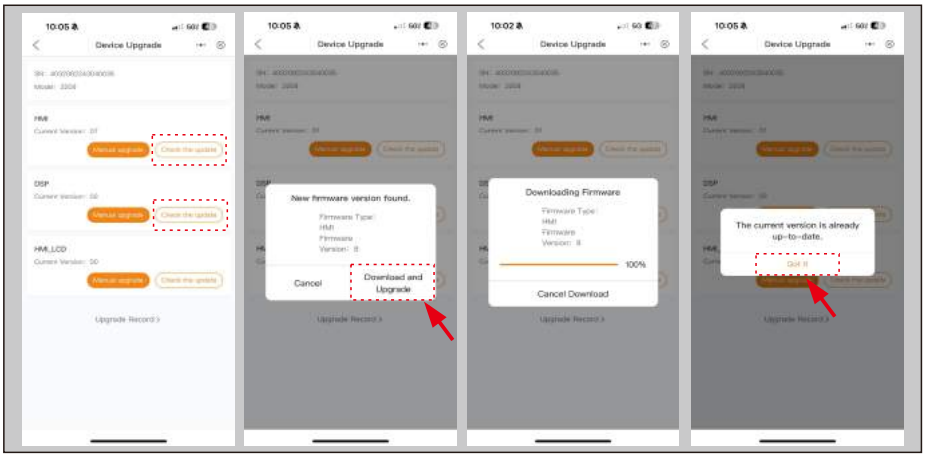

Step 4: Configure the Quick Settings

After the firmware has been upgraded, tap *Quick Setting* in the bottom right corner of the main Setting menu. Tap the toggle switch for *Follow Phone Time* to match the inverter time to your phone time or manually set the time yourself, then tap Next Step. Select the battery that is installed, and if no battery is installed, then tap *No Battery*Tap Next step, and then verify that *Acrel 1P Meter* is selected. If a meter is not installed, tap *NO Meter* and then tap Next Step.

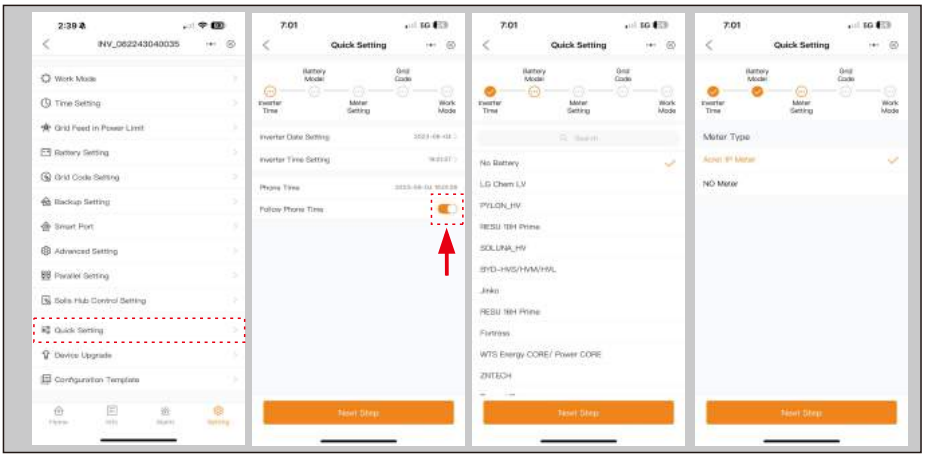

The inverter Grid Code is the grid interconnection profile by which the inverter will operate when it is connected to the grid. For systems installed in the United States, the base (default) profile is **UL-240V-18**. This grid profile is based on the IEEE 1547-2018 standard and is compliant with UL 1741 SA/SB.Tap the standard at the top first to bring up the list of regions. Scroll to the bottom and then tap *USA*. Then select the standard you would like. You can then alter the trip point parameters by tapping the parameter, entering the desired value, and then tapping Save when you are done.

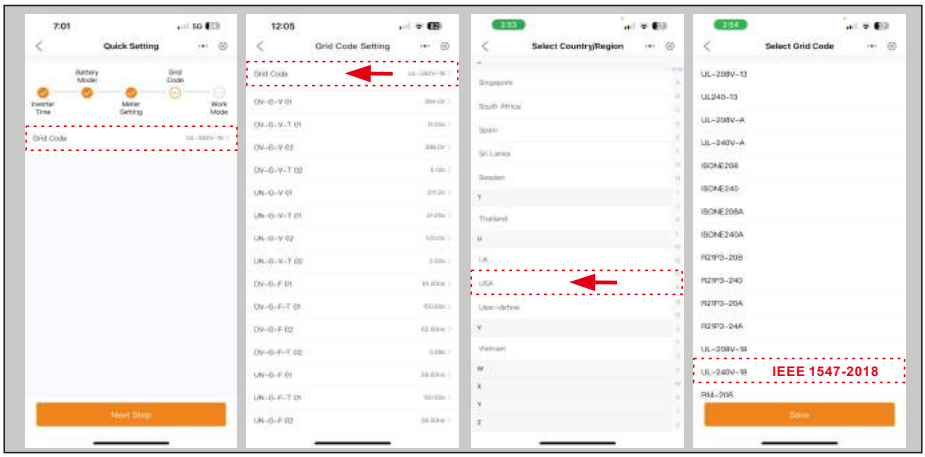

The *Work Mode* is the energy storage operating mode of the inverter. Please see the logic tables on pages 18 through 19 for explanations on how the modes operate to determine which one you should select for each system. Upon selecting the mode, you will need to toggle the on switch for that mode. If you want to maintain a store of energy that can only be used in the event of an outage, toggle on the *Battery Reserve switch* and then set the *Reserve SOC* to the desired limit. When on-grid, the battery will not discharge below this limit.

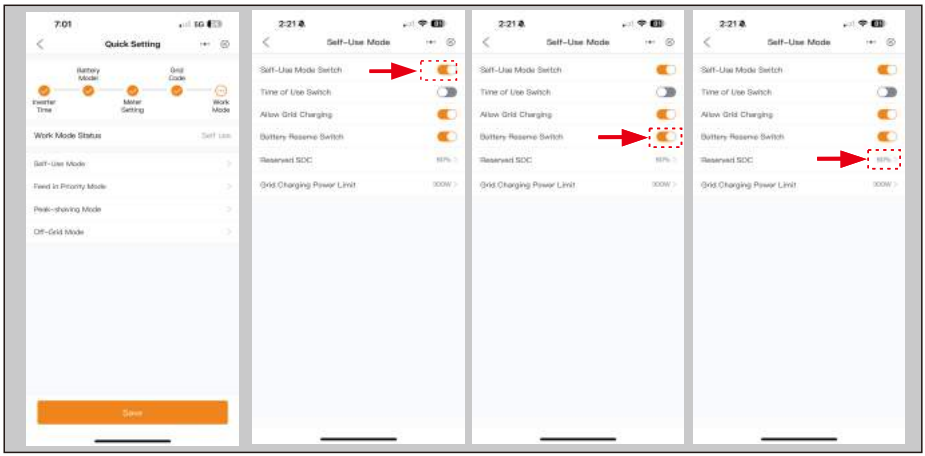

Off-Grid mode should only be enabled for systems that are perpetually isolated from the grid such as a cabin in the woods. It should not be confused with on-grid backup mode.

Time of Use Settings

This function allows you to customize when the battery can charge/discharge power and at what power rate, established by a DC current (A) setting. If the slider switch is on, the inverter will only use this schedule to determine when to charge and discharge the battery. Set the *Charge Time Slot* and *Discharge Time Slot*, be sure there is no overlap between them. Tap *+ Add Time* and then set the start and end times. During the time outside of the set windows and if the Time-of-Use toggle switch is off, the inverter will exercise the default logic for the mode, see pages 18 to 19. If *Allow Grid Charging* is turned on, the inverter will use grid power to charge the battery only under two circumstances: (1) the battery discharges to the *Force Charge SOC* set in the *Battery Settings* and (2) Time of Use is enabled and there is not enough available PV power during the charge window to meet the current rate that is established.

NOTE:

Allow Grid Charging should be enabled for every system. The inverter will float charge the battery when there is not enough PV power available. This ensures the battery never drains past the point-of-no-return where it cannot be charged by the inverter.

The *Peak-shaving Mode* has additional settings for *Max. useable Grid Power* and *Peak SOC*. Max. useable Grid Power is the most amount of power that the inverter can import from the grid to cover load demand. The *Baseline SOC* is the target state-of-charge percentage that the system will try to reach by the time the peak window starts. The system will import power to cover load demand in excess of PV power generation outside of the established peak window. When selecting *Peak Shaving Mode,* you must enable and configure the *Time of Use* settings for the mode to work properly. You must also toggle on the *Peak-Shaving Setting* in the Battery Setting.

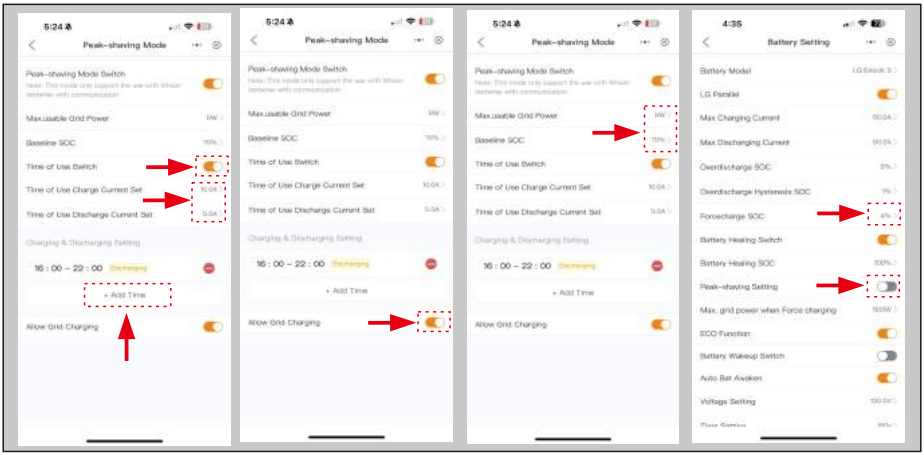

Step 5: Configure the optional settings

To enable the backup power function, first go to *Backup Setting*. Toggle on the *Backup Port Enabling Setting* switch. Keep this setting turned off if there is not going to be any backup power for this system.

AC Coupling Settings

If there is an existing PV system being AC-coupled to the backup-side of the system, the AC Coupling settings will need to be configured. Tap *AC Coupling* in the main Setting menu. Toggle on the *AC Coupling Switch*. Leave the position set to *Backup Port*.
The *AC Coupling_OFF_SOC* is the battery state-of-charge % at which the Solis S6 will shut off the existing PV system using AC frequency-shifting. The *AC-coupling Max.frequency* can be set as well as. Having this setting configured ensures that when in backup mode, the ACPV does not damage any equipment.

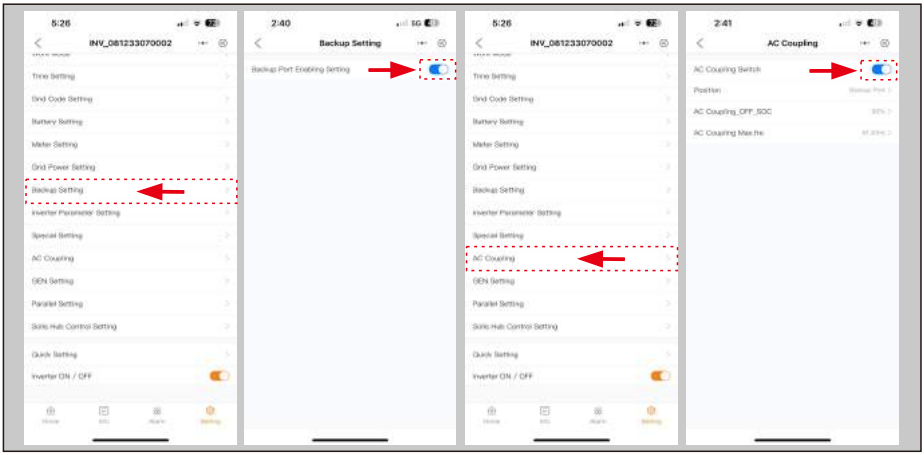

Backup Switching Time

The backup switching time will be about 80ms when using the IEEE1547-2018 grid standard. This is specifically due to a conflict with the low voltage ride-through (LVRT) requirements. If faster backup switching time (10ms) is more important than the LVRT requirements, enable the IG Follow setting. Go to Advanced Setting, then to Special Function Setting. Toggle on the IG Follow switch on for seamless transitioning to backup mode.

NOTE:
If both phase imbalance and export power control settings are enabled, and it is found that one phase is exporting power while the other is importing power, it indicates there is a meter wiring error. Please check the meter wiring. If the power direction at the power grid port is opposite to the actual logic, please check if the CT direction is correct.

NOTE:
If the password is forgotten, it can be reset by pressing and holding the Inverter LED down for ten seconds.

Paralleling Steps

Tap *Parallel Setting* and then tap *Parallel Mode*. Change this from *Single* to *Parallel,* then tap Save. Next, change the *Physical Address ID* of the slave inverter(s) to 2, 3,.. etc. but leave the address of the master inverter set to 1.

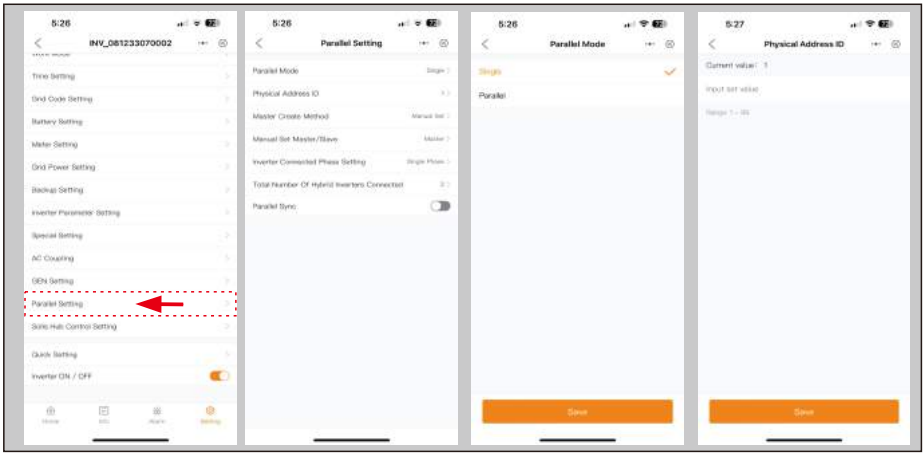

Manual Set/Master Slave allows you to manually determine which slave inverter becomes the master in the event that the original master has a fault. If three inverters are being connected in a high-leg delta configuration, the Inverter Connected Phase Setting will allow each inverter to be set as a phase. The *Total Number of Hybrid inverters Connected* should be set to reflect the number of Solis S6 hybrids installed in the system. The *Parallel Sync* toggle switch will match the settings of the master and slave(s) inverters. The inverters must each have the exact same brand, model, and kWh capacity battery connected to them. The bypass switches must all be in the same position as well.

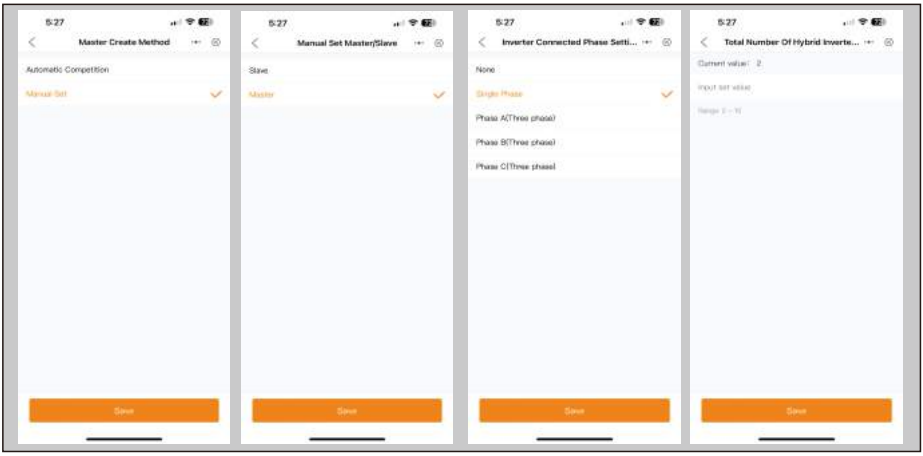

NOTE:
When the system is operating in parallel, then working modes and other Settings can be synchronously set through the Master, rather than setting them separately for each slave inverters. Also, the grid and load data of the master are considered as parallel system data.

Export Power Settings

In the main Settings menu, tap Grid Power Setting. If you would like to regulate export power, toggle on the *Feed in Power Limit Switch*. Leaving this setting off will result in the system exporting as much as it can depending on which work mode has been set.

After toggling the switch to on, set the *Feed in Power Limit Value* (kWh) to the maximum amount of power that the system is to be permitted to export (sell) back to the utility.

Alternatively, the *Feed in Current Limit Value* (A) can be set as the limiting value for power being exported. If values are entered into both the Feed in Current Limit Value and the Feed in Power Limit Value, the system will enforce the lower of the two values

Turning on the *Split-Phase On-Grid Unbalance Switch* allows the system to support up to 100% phase-imbalance. It is recommended to toggle this mode on if there are heavy 120V loads such as air conditioners, heaters, pumps that all plug into a standard outlet.

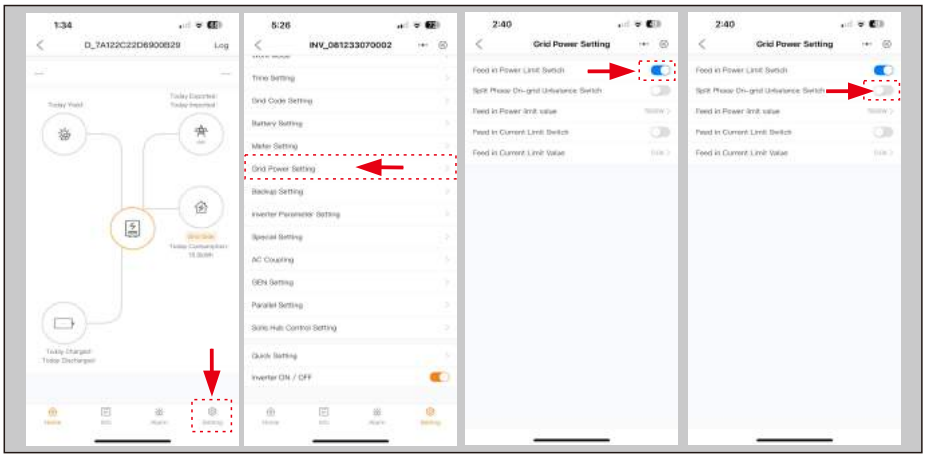

NOTE:
If it is not possible to install the meter for whatever reason, please keep the Feed in Power Limit Switch set to the off position.

NOTE:
Export power shows as a positive value and import power shows negative.

Battery Settings

Max. grid power when Force charging determines how much power the battery will be float-charged with if the battery SOC reaches the *Force Charge SOC*. The *Auto Bat Awaken* switch should be enabled to ensure the inverter will automatically turn on the inverter after a system hard reset. The *Voltage Setting* and *Time Setting* do not need to be adjusted.

Meter Settings

Tap the *Advanced Setting* menu. The *Meter Type* can be changed if a meter is being added or removed. If the consumption data is being read inversely, the *CT Direction* can be flipped from forward to backward so that the data displays normally.

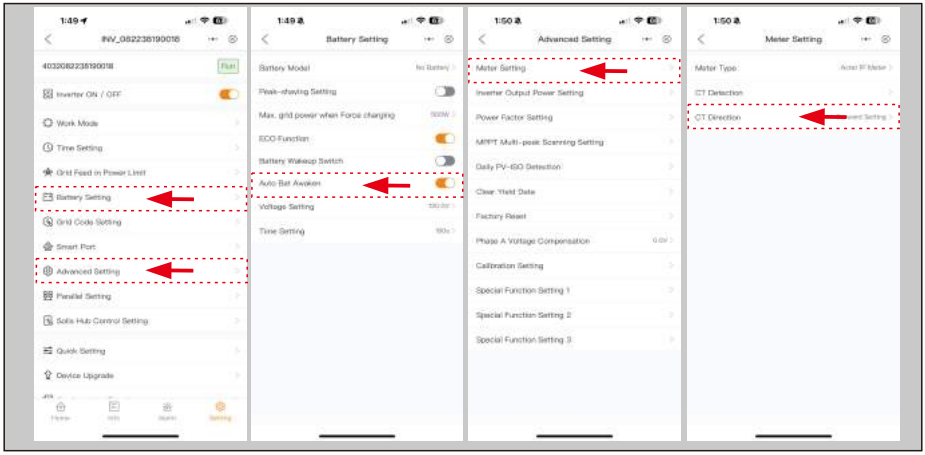

Generator Settings

If a generator is being installed , toggle on *Generator Charge*. If the system will be fully off-grid where a generator is used in place of grid power, tap *Grid Port Powered By* and then change Grid to Generator. You can set the amount of power that the system will use from the generator to charge the battery by adjusting the *Gen Charge Power*. The *Start Charging SOC* determines the point at which the generator will be turned on to charge the battery and feed the home loads. When this occurs, the PV power will become zero as to not back feed the generator. The *Stop Charging SOC* will set the point at which the generator will be turned off so that the system will return to PV and battery only. These SOC values can be adjusted.

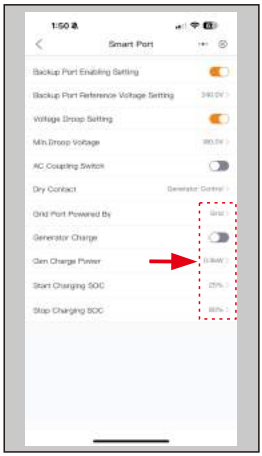

The inverter uses the dry contact connection to start and stop the generator. If the external third-party ATS has a 12-24VDC signal input then it can also be connected to the inverter ATS24V pin (+) along with the GEN_GND pin (-).

Now that the settings are done, turn on the inverter DC switch. The system will begin to generate PV power after about five minutes. The main screen provides an overview of the system behavior. It can quickly be determined if the battery is properly communicating or not and what the SOC is. The image below explains what each icon represents. At the bottom of the page are four submenus: Home, Info, Settings, and More. The Info page breaks down into four categories: Inverter, Battery, Grid, and Load.

Inverter: inverter power production history, PV voltages and currents, inverter info (serial number, model number, and firmware version), grid code, and alarm code history
Battery: battery model and status, battery voltage and current
Grid: power imported and exported, AC grid voltage, frequency, and amperage
Load: power being consumed by the home loads and backup loads

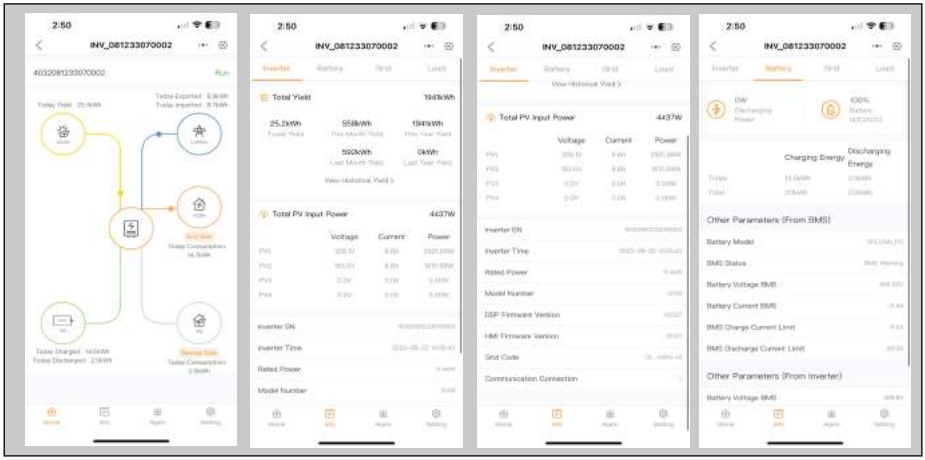

Alarm History

It is recommended to check the alarm history as the final step of the commissioning process, excluding creating a site on SolisCloud for the system. Tap *Alarm* and then tap *Historical Alarm* to view the full alarm history. Each alarm will have a date and time stamp as well as a suggestion on how to handle the alarm. The next section goes over troubleshooting and you can always contact Solis USA technical support with any questions or concerns.

Steps 7 & 8: Finishing the Commissioning Process

The inverter commissioning process has now been completed. It is recommended to monitor the system closely over the next week to ensure that everything is working as it should. Please refer to the Solis data logger manual for assistance with registering a new plant on SolisCloud. Scan the QR code at the bottom of page 60 for the Solis data logger manual.

7. Maintenance

Solis single phase inverter does not require any regular maintenance. However, cleaning the dust on the heat sink will help the inverter to dissipate heat and increase its life expectancy. The dust can be removed with a soft brush.

CAUTION:
Do not touch the inverter's surface when it is operating. Some parts of the inverter may be hot and cause burns. Turn off the inverter (refer to Section 5.2) and wait for a cool-down period before before any maintenance or cleaning operation.

The LCD and the LED status indicator lights can be cleaned with a damp cloth if they are too dirty to be read.

NOTE:
Never use any solvents, abrasives or corrosive materials to clean the inverter.

8. Troubleshooting

The inverter is designed in accordance with the most important international grid-tied standards and safety and electromagnetic compatibility requirements. Before delivering to the customer, the inverter has been subjected to several tests to ensure its optimal operation and reliability.

In case of failure, the LCD screen will display an alarm message. In this case, the inverter may stop feeding into the grid. The failure descriptions and their corresponding alarm messages are listed in Table 8.1:

Alarms	Cause	Solution
No Information (Blank Screen)	• Input voltage low/missing • Polarity reversed • Main board damaged	**Test – DC switch OFF** • Check PV connections • Check polarity • Check voltage >120V Single, >350V three **Test – DC Switch ON** • Check voltage >120V Single, >350V three • If DC voltage is “0” replace inverter
Initializing (Inverter stuck in this mode)	• Inverter is waiting for driving signal	**Test – DC switch OFF** • Check PV connections • Check polarity • Check voltage >120V Single, >350V three **Test – DC Switch ON** • Check voltage >120V Single, >350V three • A cable may have been damaged or loosened in shipping replace inverter
OV-G-V: Over Grid Voltage	• Inverter detects grid voltage as too high	**Test – DC switch OFF** • Check AC at the inverter • If AC measures high, adjust upper limit with permission from utility **Test – DC Switch ON, full power** • Check AC at inverter test points • Compare with LCD • If AC measures high, cables between inverter and interconnect are too small • Check ampacity and voltage drop calculations • Verify appropriate Grid Standard

Alarms	Cause	Solution
UN-G-V: Under Grid Voltage	• Inverter detects grid voltage as too low	**Test – DC switch OFF** • Check AC at the inverter test points • If AC measures low, adjust lower limit with permission from utility • Check LCD voltage reading, may be a bad measurement circuit **Test – DC Switch ON** • Verify appropriate Grid Standard • Replace inverter
OV-G-F: Over Grid Frequency	• Inverter detects grid Frequency as too high	**Test – DC switch OFF** • Check frequency at the inverter test points • If Frequency measures high, adjust upper limit with permission from utility • Check LCD reading, may be a bad measurement circuit **Test – DC Switch ON** • Verify appropriate Grid Standard • Replace inverter
UN-G-F: Under Grid Frequency	• Inverter detects grid Frequency as too low	**Test – DC switch OFF** • Check frequency at the inverter test points • If Frequency measures low, adjust lower limit with permission from utility • Check LCD reading, may be a bad measurement circuit **Test – DC Switch ON** • Verify appropriate Grid Standard • Replace inverter
NO-GRID	• Inverter does not detect the grid	**Test – DC switch OFF** • Check AC at the inverter test points • L-L, L-GND • Do NOT tell me 240VAC • Check LCD reading, may be a bad measurement circuit **Test – DC Switch ON** • Check grid standard • Replace inverter
OV-DC: DC voltage is too high	• Inverter detects High DCV	**Test – DC switch OFF** • Check DC at the inverter test points • If DCV is high, too many panels in the string **Test – DC Switch ON** • Check LCD reading, may be a bad measurement circuit • Replace inverter

Alarms	Cause	Solution
OV-BUS: DC BUS voltage is too high	• Inverter detects High DCV on internal bus	**Test** • Measure DC and AC voltages • Compare with LCD • Replace inverter • Internal damage • Wire came loose during shipping
UN-BUS: DC BUS voltage is too low	• Inverter detects low DCV on internal bus	**Test** • Measure DC and AC voltages • Compare with LCD • Replace inverter • Internal damage • Wire came loose during shipping
GRID-INTF: Grid unstable	• Inverter detects grid instability, internal fault current high	**Test – With DC Switch OFF** • Measure AC voltage • Test AC line for THD • Test – With DC Switch ON **Test AC line for THD** • Multiple inverters/turn one off • Impedance matching adjustment or box • Internal damage • Wire came loose in shipping
INI-FAULT: Initialization Protection	• Master and Slave DSP have different values	**Reset Inverter** • DC switch OFF • Wait until all lights/LCD turn off • DC switch ON • Replace inverter
OV-TEM: Temperature Protection	• Inverter detects high ambient temperature >60C	**Inspect installation** • Check heatsink for obstructions/ventilation • Is inverter in direct sunshine • Measure ambient temperature near inverter • If temp is in range replace inverter
PV ISO-PRO 01/02: Ground Protection	• Inverter detects low DC insulation resistance	**Inspect installation** • Reset inverter • Note weather conditions when alarm occurs • Measure insulation resistance • If normal, measure in SAME weather as alarm • Physically check cables • Replace inverter

Alarms	Cause	Solution
AFCI Check FAULT	• AFCI module self check fault	**Reset Inverter** • DC switch OFF • Wait until all lights/LCD turn off • DC switch ON • Replace inverter
ARC-FAULT	• Inverter detects arc in DC circuit	**Inspect installation** • Check cable with string tester • Physically check cables • Inspect panel junction boxes • Inspect cable connections • Reset inverter • Replace inverter
Screen OFF with DC applied	• Inverter internally damaged	• Do not turn off the DC switches as it will damage the inverter. • Please wait for the solar irradiance reduces and confirm the string current is less than 0.5A with a clip-on ammeter and then turn off the DC switches. • Please note that any damages due to wrong operations are not covered in the device warranty.

Table 8.1 Fault messages and descriptions

NOTE:
If the inverter displays any alarm message as listed in Table 8.1; please turn off the inverter (refer to Section 5.2 to stop your inverter) and wait for 5 minutes before restarting it (refer to Section 5.1 to start your inverter). If the failure persists, please contact your local distributor or the service center. Please keep ready with you the following information before contacting us.

1. Serial number of Solis Single Phase Inverter;
2. The distributor/dealer of Solis Single Phase Inverter (if available);
3. Installation date.
4. The description of problem (i.e. the alarm message displayed on the LCD and the status of the LED status indicator lights. Other readings obtained from the Information submenu (refer to Section 6.2) will also be helpful.);
5. The PV array configuration (e.g. number of panels, capacity of panels, number of strings, etc.);
6. Your contact details.

9. Specifications

Technical Data	S6-ER1P5K02-NV-ND-H-US
Input DC	
Recommended max. PV power	10kW
Max. input voltage	600V
Rated voltage	330V
Start-up voltage	100V
MPPT voltage range	90-550V
Full load MPPT voltage range	220-520V
Max. input power per MPPT	5kW
Max. input current	14A/16A
Max. short circuit current	22A/22A
MPPT number / Max. input strings number	2/2
Output DC	
Rated output power	5kW
Max. apparent output power	5kVA
Max. output power	5kW
Rated grid voltage	1Φ/PE, 240 V / 208 V
Grid voltage range	211-264 V (for 240 V rated) / 183-228 V (for 208 V rated)
Grid frequency	60 Hz
Grid frequency range	59.5-60.5 Hz
Max. output current	20.8A/24.0A
Power Factor	> 0.99 (0.8 leading - 0.8 lagging)
THDi	<3%
DC injection current	<0.5% In
AC Input (Grid)	
Input voltage range	211-264 V (for 240 V rated) / 183-228 V (for 208 V rated)
Max. input current	31.2A/26.0A
Frequency range	59.5-60.5 Hz
Battery	
Battery Compatible Type	Li-ion
Battery Voltage Range	380-500V
Max. charging/discharging Current	30A
Efficiency	
Max. efficiency	97.7%
CEC efficiency	97.1%
MPPT efficiency	>99.5%

9. Specifications

Technical Data	S6-ER1P5K02-NV-ND-H-US
Protection	
DC reverse-polarity protection	Yes
Power Control System (PCS)	Yes
Ground fault monitoring	Yes
DC Switch	Yes
DC Surge Protection	Yes
AC Surge Protection	Yes
Residual-current Monitoring Unit	Yes
Battery Overcurrent / Short Circuit Protection	Yes (DC FUSE)
DC reverse-polarity protection Battery	Yes
Anti-islanding protection	Yes
External Remote shutdown EPO	Yes
Integrated AFCI	Yes
Rapid Shutdown NEC 2020	Built-In APS or Tigo or NEP Transmitter
Protection	
Dimensins (W*H*D)	13.1*26.5*9.8in (333*673*249mm)
Weight	43.2 lbs (19.6 kg)
Topology	Transformerless
Self consumption (Night)	<20W
Relative humidity	0-100%
Operating ambient temperature range	-13...140℉ / -25...+60℃
Storage environment	-40...176℉ / -40...+80℃
Ingress protection	TYPE 4X (IP66)
Noise emission (Typical)	≤30dB(A)
Cooling concept	Natural convection
Max. operating altitude	13120 ft (4000 m)
Compliance	UL1741SB, UL1741SA, IEEE1547-2018, UL1699B, UL1998, FCCPart15ClassB, California Rule21, NEC 690.12-2020, CAN/CSA C22.2107.1-1
Features	
DC connection	1 in. knockouts for conduit (x4) on the side, back and bottom; Spring clamp terminals
AC connection	1.5 in. knockouts for conduit (x3) on the side, back and bottom; Spring clamp terminals
Display	LED+APP
Commiunication	Rs485, Cellular, Wi-Fi, Optional: LAN
Warranty	10 years (Extend to 20 years)

9. Specifications

Technical Data	S6-ER1P7.5K03-NV-ND-H-US
Input DC	
Recommended max. PV power	15kW
Max. input voltage	600V
Rated voltage	330V
Start-up voltage	100V
MPPT voltage range	90-550V
Full load MPPT voltage range	220-500V
Max. input power per MPPT	5kW
Max. input current	14A/16A
Max. short circuit current	22A/22A
MPPT number / Max. input strings number	2/2
Output DC	
Rated output power	7.5kW
Max. apparent output power	7.5kVA
Max. output power	7.5kW
Rated grid voltage	1Φ/PE, 240 V / 208 V
Grid voltage range	211-264 V (for 240 V rated) / 183-228 V (for 208 V rated)
Grid frequency	60 Hz
Grid frequency range	59.5-60.5 Hz
Max. output current	31.3A/36.1A
Power Factor	> 0.99 (0.8 leading - 0.8 lagging)
THDi	<3%
DC injection current	<0.5% In
AC Input (Grid)	
Input voltage range	211-264 V (for 240 V rated) / 183-228 V (for 208 V rated)
Max. input current	47.0A/54.2A
Frequency range	59.5-60.5 Hz
Battery	
Battery Compatible Type	Li-ion
Battery Voltage Range	380-500V
Max. charging/discharging Current	30A
Efficiency	
Max. efficiency	97.7%
CEC efficiency	97.1%
MPPT efficiency	>99.5%

9. Specifications

Technical Data	S6-ER1P7.5K03-NV-ND-H-US
Protection	
DC reverse-polarity protection	Yes
Power Control System (PCS)	Yes
Ground fault monitoring	Yes
DC Switch	Yes
DC Surge Protection	Yes
AC Surge Protection	Yes
Residual-current Monitoring Unit	Yes
Battery Overcurrent / Short Circuit Protection	Yes (DC FUSE)
DC reverse-polarity protection Battery	Yes
Anti-islanding protection	Yes
External Remote shutdown EPO	Yes
Integrated AFCI	Yes
Rapid Shutdown NEC 2020	Built-In APS or Tigo or NEP Transmitter
Protection	
Dimensins (W*H*D)	13.1*26.5*9.8in (333*673*249mm)
Weight	43.2 lbs (19.6 kg)
Topology	Transformerless
Self consumption (Night)	<20W
Relative humidity	0-100%
Operating ambient temperature range	-13...140℉ / -25...+60℃
Storage environment	-40...176℉ / -40...+80℃
Ingress protection	TYPE 4X (IP66)
Noise emission (Typical)	≤30dB(A)
Cooling concept	Natural convection
Max. operating altitude	13120 ft (4000 m)
Compliance	UL1741SB, UL1741SA, IEEE1547-2018, UL1699B, UL1998, FCCPart15ClassB, California Rule21, NEC 690.12-2020, CAN/CSA C22.2107.1-1
Features	
DC connection	1 in. knockouts for conduit (x4) on the side, back and bottom; Spring clamp terminals
AC connection	1.5 in. knockouts for conduit (x3) on the side, back and bottom; Spring clamp terminals
Display	LED+APP
Commiunication	Rs485, Cellular, Wi-Fi, Optional: LAN
Warranty	10 years (Extend to 20 years)

9. Specifications

Technical Data	S6-ER1P7.6K03-NV-ND-H-US
Input DC	
Recommended max. PV power	15.2kW
Max. input voltage	600V
Rated voltage	330V
Start-up voltage	100V
MPPT voltage range	90-550V
Full load MPPT voltage range	220-500V
Max. input power per MPPT	5kW
Max. input current	14A/16A
Max. short circuit current	22A/22A
MPPT number / Max. input strings number	2/2
Output DC	
Rated output power	7.6kW
Max. apparent output power	7.6kVA
Max. output power	7.6kW
Rated grid voltage	1Φ/PE, 240 V / 208 V
Grid voltage range	211-264 V (for 240 V rated) / 183-228 V (for 208 V rated)
Grid frequency	60 Hz
Grid frequency range	59.5-60.5 Hz
Max. output current	31.7A/36.5A
Power Factor	> 0.99 (0.8 leading - 0.8 lagging)
THDi	<3%
DC injection current	<0.5% In
AC Input (Grid)	
Input voltage range	211-264 V (for 240 V rated) / 183-228 V (for 208 V rated)
Max. input current	47.6A/54.8A
Frequency range	59.5-60.5 Hz
Battery	
Battery Compatible Type	Li-ion
Battery Voltage Range	380-500V
Max. charging/discharging Current	30A
Efficiency	
Max. efficiency	97.7%
CEC efficiency	97.1%
MPPT efficiency	>99.5%

9. Specifications

Technical Data	S6-ER1P7.6K03-NV-ND-H-US
Protection	
DC reverse-polarity protection	Yes
Power Control System (PCS)	Yes
Ground fault monitoring	Yes
DC Switch	Yes
DC Surge Protection	Yes
AC Surge Protection	Yes
Residual-current Monitoring Unit	Yes
Battery Overcurrent / Short Circuit Protection	Yes (DC FUSE)
DC reverse-polarity protection Battery	Yes
Anti-islanding protection	Yes
External Remote shutdown EPO	Yes
Integrated AFCI	Yes
Rapid Shutdown NEC 2020	Built-In APS or Tigo or NEP Transmitter
Protection	
Dimensins (W*H*D)	13.1*26.5*9.8in (333*673*249mm)
Weight	43.2 lbs (19.6 kg)
Topology	Transformerless
Self consumption (Night)	<20W
Relative humidity	0-100%
Operating ambient temperature range	-13...140℉ / -25...+60℃
Storage environment	-40...176℉ / -40...+80℃
Ingress protection	TYPE 4X (IP66)
Noise emission (Typical)	≤30dB(A)
Cooling concept	Natural convection
Max. operating altitude	13120 ft (4000 m)
Compliance	UL1741SB, UL1741SA, IEEE1547-2018, UL1699B, UL1998, FCCPart15ClassB, California Rule21, NEC 690.12-2020, CAN/CSA C22.2107.1-1
Features	
DC connection	1 in. knockouts for conduit (x4) on the side, back and bottom; Spring clamp terminals
AC connection	1.5 in. knockouts for conduit (x3) on the side, back and bottom; Spring clamp terminals
Display	LED+APP
Commiunication	Rs485, Cellular, Wi-Fi, Optional: LAN
Warranty	10 years (Extend to 20 years)

9. Specifications

Technical Data	S6-ER1P9.9K04-NV-ND-H-US
Input DC	
Recommended max. PV power	19.8kW
Max. input voltage	600V
Rated voltage	330V
Start-up voltage	100V
MPPT voltage range	90-550V
Full load MPPT voltage range	220-500V
Max. input power per MPPT	5kW
Max. input current	14A/16A
Max. short circuit current	22A/22A
MPPT number / Max. input strings number	2/2
Output DC	
Rated output power	9.9kW
Max. apparent output power	9.9kVA
Max. output power	9.9kW
Rated grid voltage	1Φ/PE, 240 V / 208 V
Grid voltage range	211-264 V (for 240 V rated) / 183-228 V (for 208 V rated)
Grid frequency	60 Hz
Grid frequency range	59.5-60.5 Hz
Max. output current	41.3A/47.6A
Power Factor	> 0.99 (0.8 leading - 0.8 lagging)
THDi	<3%
DC injection current	<0.5% In
AC Input (Grid)	
Input voltage range	211-264 V (for 240 V rated) / 183-228 V (for 208 V rated)
Max. input current	62.0A/71.4A
Frequency range	59.5-60.5 Hz
Battery	
Battery Compatible Type	Li-ion
Battery Voltage Range	380-500V
Max. charging/discharging Current	30A
Efficiency	
Max. efficiency	97.7%
CEC efficiency	97.1%
MPPT efficiency	>99.5%

9. Specifications

Technical Data	S6-ER1P9.9K04-NV-ND-H-US
Protection	
DC reverse-polarity protection	Yes
Power Control System (PCS)	Yes
Ground fault monitoring	Yes
DC Switch	Yes
DC Surge Protection	Yes
AC Surge Protection	Yes
Residual-current Monitoring Unit	Yes
Battery Overcurrent / Short Circuit Protection	Yes (DC FUSE)
DC reverse-polarity protection Battery	Yes
Anti-islanding protection	Yes
External Remote shutdown EPO	Yes
Integrated AFCI	Yes
Rapid Shutdown NEC 2020	Built-In APS or Tigo or NEP Transmitter
Protection	
Dimensins (W*H*D)	13.1*26.5*9.8in (333*673*249mm)
Weight	43.2 lbs (19.6 kg)
Topology	Transformerless
Self consumption (Night)	<20W
Relative humidity	0-100%
Operating ambient temperature range	-13...140℉ / -25...+60℃
Storage environment	-40...176℉ / -40...+80℃
Ingress protection	TYPE 4X (IP66)
Noise emission (Typical)	≤30dB(A)
Cooling concept	Natural convection
Max. operating altitude	13120 ft (4000 m)
Compliance	UL1741SB, UL1741SA, IEEE1547-2018, UL1699B, UL1998, FCCPart15ClassB, California Rule21, NEC 690.12-2020, CAN/CSA C22.2107.1-1
Features	
DC connection	1 in. knockouts for conduit (x4) on the side, back and bottom; Spring clamp terminals
AC connection	1.5 in. knockouts for conduit (x3) on the side, back and bottom; Spring clamp terminals
Display	LED+APP
Commiunication	Rs485, Cellular, Wi-Fi, Optional: LAN
Warranty	10 years (Extend to 20 years)

9. Specifications

Technical Data	S6-ER1P10K04-NV-ND-H-US
Input DC	
Recommended max. PV power	20kW
Max. input voltage	600V
Rated voltage	330V
Start-up voltage	100V
MPPT voltage range	90-550V
Full load MPPT voltage range	220-500V
Max. input power per MPPT	5kW
Max. input current	14A/16A
Max. short circuit current	22A/22A
MPPT number / Max. input strings number	2/2
Output DC	
Rated output power	10kW
Max. apparent output power	10kVA
Max. output power	10kW
Rated grid voltage	1Φ/PE, 240 V / 208 V
Grid voltage range	211-264 V (for 240 V rated) / 183-228 V (for 208 V rated)
Grid frequency	60 Hz
Grid frequency range	59.5-60.5 Hz
Max. output current	41.7A/48.1A
Power Factor	> 0.99 (0.8 leading - 0.8 lagging)
THDi	<3%
DC injection current	<0.5% In
AC Input (Grid)	
Input voltage range	211-264 V (for 240 V rated) / 183-228 V (for 208 V rated)
Max. input current	62.3A/72.2A
Frequency range	59.5-60.5 Hz
Battery	
Battery Compatible Type	Li-ion
Battery Voltage Range	380-500V
Max. charging/discharging Current	30A
Efficiency	
Max. efficiency	97.7%
CEC efficiency	97.1%
MPPT efficiency	>99.5%

9. Specifications

Technical Data	S6-ER1P10K04-NV-ND-H-US
Protection	
DC reverse-polarity protection	Yes
Power Control System (PCS)	Yes
Ground fault monitoring	Yes
DC Switch	Yes
DC Surge Protection	Yes
AC Surge Protection	Yes
Residual-current Monitoring Unit	Yes
Battery Overcurrent / Short Circuit Protection	Yes (DC FUSE)
DC reverse-polarity protection Battery	Yes
Anti-islanding protection	Yes
External Remote shutdown EPO	Yes
Integrated AFCI	Yes
Rapid Shutdown NEC 2020	Built-In APS or Tigo or NEP Transmitter
Protection	
Dimensins (W*H*D)	13.1*26.5*9.8in (333*673*249mm)
Weight	43.2 lbs (19.6 kg)
Topology	Transformerless
Self consumption (Night)	<20W
Relative humidity	0-100%
Operating ambient temperature range	-13...140℉ / -25...+60℃
Storage environment	-40...176℉ / -40...+80℃
Ingress protection	TYPE 4X (IP66)
Noise emission (Typical)	≤30dB(A)
Cooling concept	Natural convection
Max. operating altitude	13120 ft (4000 m)
Compliance	UL1741SB, UL1741SA, IEEE1547-2018, UL1699B, UL1998, FCCPart15ClassB, California Rule21, NEC 690.12-2020, CAN/CSA C22.2107.1-1
Features	
DC connection	1 in. knockouts for conduit (x4) on the side, back and bottom; Spring clamp terminals
AC connection	1.5 in. knockouts for conduit (x3) on the side, back and bottom; Spring clamp terminals
Display	LED+APP
Commiunication	Rs485, Cellular, Wi-Fi, Optional: LAN
Warranty	10 years (Extend to 20 years)

9. Specifications

Technical Data	S6-ER1P11.4K04-NV-ND-H-US
Input DC	
Recommended max. PV power	20kW
Max. input voltage	600V
Rated voltage	330V
Start-up voltage	100V
MPPT voltage range	90-550V
Full load MPPT voltage range	235-500V
Max. input power per MPPT	5kW
Max. input current	14A/16A
Max. short circuit current	22A/22A
MPPT number / Max. input strings number	2/2
Output DC	
Rated output power	11.4kW
Max. apparent output power	11.4kVA
Max. output power	11.4kW
Rated grid voltage	1Φ/PE, 240 V / 208 V
Grid voltage range	211-264 V (for 240 V rated) / 183-228 V (for 208 V rated)
Grid frequency	60 Hz
Grid frequency range	59.5-60.5 Hz
Max. output current	47.5A/54.8A
Power Factor	> 0.99 (0.8 leading - 0.8 lagging)
THDi	<3%
DC injection current	<0.5% In
AC Input (Grid)	
Input voltage range	211-264 V (for 240 V rated) / 183-228 V (for 208 V rated)
Max. input current	71.3A/82.2A
Frequency range	59.5-60.5 Hz
Battery	
Battery Compatible Type	Li-ion
Battery Voltage Range	380-500V
Max. charging/discharging Current	30A
Efficiency	
Max. efficiency	97.7%
CEC efficiency	97.1%
MPPT efficiency	>99.5%

9. Specifications

Technical Data	S6-ER1P11.4K04-NV-ND-H-US
Protection	
DC reverse-polarity protection	Yes
Power Control System (PCS)	Yes
Ground fault monitoring	Yes
DC Switch	Yes
DC Surge Protection	Yes
AC Surge Protection	Yes
Residual-current Monitoring Unit	Yes
Battery Overcurrent / Short Circuit Protection	Yes (DC FUSE)
DC reverse-polarity protection Battery	Yes
Anti-islanding protection	Yes
External Remote shutdown EPO	Yes
Integrated AFCI	Yes
Rapid Shutdown NEC 2020	Built-In APS or Tigo or NEP Transmitter
Protection	
Dimensins (W*H*D)	13.1*26.5*9.8in (333*673*249mm)
Weight	43.2 lbs (19.6 kg)
Topology	Transformerless
Self consumption (Night)	<20W
Relative humidity	0-100%
Operating ambient temperature range	-13...140℉ / -25...+60℃
Storage environment	-40...176℉ / -40...+80℃
Ingress protection	TYPE 4X (IP66)
Noise emission (Typical)	≤30dB(A)
Cooling concept	Natural convection
Max. operating altitude	13120 ft (4000 m)
Compliance	UL1741SB, UL1741SA, IEEE1547-2018, UL1699B, UL1998, FCCPart15ClassB, California Rule21, NEC 690.12-2020, CAN/CSA C22.2107.1-1
Features	
DC connection	1 in. knockouts for conduit (x4) on the side, back and bottom; Spring clamp terminals
AC connection	1.5 in. knockouts for conduit (x3) on the side, back and bottom; Spring clamp terminals
Display	LED+APP
Commiunication	Rs485, Cellular, Wi-Fi, Optional: LAN
Warranty	10 years (Extend to 20 years)

10.1 FCC Instructions

This device complies with part 15 of the FCC Rules. Operation is subject to the following two conditions: (1) This device may not cause harmful interference, and (2) this device must accept any interference received, including interference that may cause undesired operation.

FCC WARNING:
Any Changes or modifications not expressly approved by the party responsible for compliance could void the user's authority to operate the equipment.

Note:
This equipment has been tested and found to comply with the limits for a Class B digital device, pursuant to part 15 of the FCC Rules. These limits are designed to provide reasonable protection against harmful interference in a residential installation. This equipment generates uses and can radiate radio frequency energy and, if not installed and used in accordance with the instructions, may cause harmful interference to radio communications. However, there is no guarantee that interference will not occur in a particular installation. If this equipment does cause harmful interference to radio or television reception, which can be determined by turning the equipment off and on, the user is encouraged to try to correct the interference by one or more of the following measures:
-Reorient or relocate the receiving antenna.
-Increase the separation between the equipment and receiver.
-Connect the equipment into an outlet on a circuit different from that to which the receiver is connected.
-Consult the dealer or an experienced radio/TV technician for help.

This equipment complies with FCC radiation exposure limits set forth for an uncontrolled environment. This equipment should be installed and operated with minimum distance 20cm between the radiator & your body.

Manufacturer: Ginlong Technologies Co.,Ltd., Ningbo, Zhejiang, P.R.China

US Office: 565 Metro Pl. S. Suite 3214, Dublin OH 43017, USA

Toll-free: 866.438.8408 I Email: sales@ginlong.com I ussales@ginlong.com

Web: www.ginlong.com

Please adhere to the actual products in case of any discrepancies in this user manual.

SunSpec Certified

Comply with CA Rule 21/ Certified to UL 1741 SB

C US

273488