TEST REPORT

Product Name : AQUABOOST MINI V2
Model Number : 8373
FCC ID : 2AWFB-8373

Prepared for : SHENZHEN BWAY TECH CO.,LTD
Address : 1709, Yunhua Times, Haoxiang Road,Bogang Community,Shajing Street,Bao'an District,Shenzhen,China

Prepared by : EMTEK (SHENZHEN) CO., LTD.
Address : Building 69, Majialong Industry Zone,Nanshan District, Shenzhen, Guangdong, China

Tel: (0755) 26954280
Fax: (0755) 26954282

Report Number : ENS2204060047W00102R
Date(s) of Tests : April 6, 2022 to April 22, 2022
Date of issue : April 22, 2022

Table of Contents

1 TEST RESULT CERTIFICATION 3
2 EUT TECHNICAL DESCRIPTION 5
3 SUMMARY OF TEST RESULT 6
4 TEST METHODOLOGY 7
4.1 GENERAL DESCRIPTION OF APPLIED STANDARDS 7
4.2 MEASUREMENT EQUIPMENT USED 7
4.3 DESCRIPTION OF TEST MODES 8
5 FACILITIES AND ACCREDITATIONS 9
5.1 FACILITIES 9
5.2 EQUIPMENT 9
5.3 LABORATORY ACCREDITATIONS AND LISTINGS 9
6 TEST SYSTEM UNCERTAINTY 10
7 SETUP OF EQUIPMENT UNDER TEST 11
7.1 RADIO FREQUENCY TEST SETUP 1 11
7.2 RADIO FREQUENCY TEST SETUP 2 11
7.3 CONDUCTED EMISSION TEST SETUP 13
7.4 BLOCK DIAGRAM CONFIGURATION OF TEST SYSTEM 14
7.5 SUPPORT EQUIPMENT 14
8 FREQUENCY HOPPING SYSTEM REQUIREMENTS 15
8.1 STANDARD APPLICABLE 15
8.2 EUT PSEUDORANDOM FREQUENCY HOPPING SEQUENCE 15
8.3 EQUAL HOPPING FREQUENCY USE 16
8.4 FREQUENCY HOPPING SYSTEM 16
9 TEST REQUIREMENTS 17
9.1 20DB&99%BANDWIDTH 17
9.2 CARRIER FREQUENCY SEPARATION 30
9.3 NUMBER OF HOPPING FREQUENCIES 38
9.4 AVERAGE TIME OF OCCUPANCY (DWELL TIME) 40
9.5 MAXIMUM PEAK CONDUCTED OUTPUT POWER 43
9.6 CONDUCTED SUPRIOUS EMISSION 49
9.7 RADIATED SPURIOUS EMISSION 65
9.8 CONDUCTED EMISSION TEST 78
9.9 ANTENNA APPLICATION 81

1 TEST RESULT CERTIFICATION

Applicant	:	SHENZHEN BWAY TECH CO.,LTD
Address	:	1709, Yunhua Times, Haoxiang Road,Bogang Community,Shajing Street,Bao'an District,Shenzhen,China
Manufacturer	:	SHENZHEN BWAY TECH CO.,LTD
Address	:	1709, Yunhua Times, Haoxiang Road,Bogang Community,Shajing Street,Bao'an District,Shenzhen,China
EUT	:	AQUABOOST MINI V2
Model Name	:	8373
Trademark	:	N/A

Measurement Procedure Used:

APPLICABLE STANDARDS	
STANDARD	**TEST RESULT**
FCC 47 CFR Part 2, Subpart J FCC 47 CFR Part 15, Subpart C	**PASS**
IC RSS-GEN, Issue 5(04-2018)+A1(03-2019)+A2(02-2021) IC RSS-247 Issue 2(02-2017)	**PASS**

The above equipment was tested by EMTEK(SHENZHEN) CO., LTD. The test data, data evaluation, test procedures, and equipment configurations shown in this report were made in accordance with the procedures given in ANSI C63.10 (2013) and the energy emitted by the sample EUT tested as described in this report is in compliance with the requirements of FCC Rules Part 2, Part 15.247, IC RSS-247 Issue 2 and IC RSS-GEN, Issue 5.

The test results of this report relate only to the tested sample identified in this report

Date of Test : April 6, 2022 to April 22, 2022

Prepared by : Luo Pei Ye
Luo peiye /Editor

Reviewer : Joe Xia
Joe Xia /Supervisor

Approve & Authorized Signer : Lisa Wang/Manager

EMTEK (SHENZHEN) CO., LTD. TESTING

Modified History

Version	Report No.	Revision Date	Summary
V1.0	ENS2204060047W00102R	/	Original Report

2 EUT TECHNICAL DESCRIPTION

Characteristics	Description
Product:	AQUABOOST MINI V2
Model Number:	8373
Sample:	2#
Device Type:	Bluetooth V5.0
Data Rate:	1Mbps for GFSK modulation 2Mbps forπ/4-DQPSK modulation 3Mbps for 8DPSK modulation
Modulation:	GFSK, π/4-DQPSK, 8DPSK
Operating Frequency Range(s) :	2402-2480MHz
Number of Channels:	79 channels
Transmit Power Max:	0.33dBm
Antenna Type:	PCB Antenna
Antenna Gain:	1.2 dBi
Power supply:	DC 5V/1A
Date of Received:	April 6, 2022
Temperature Range:	-20°C ~ +70°C

Note: *for more details, please refer to the User's manual of the EUT.*

3 SUMMARY OF TEST RESULT

FCC Part Clause	IC Part Clause	Test Parameter	Verdict	Remark
15.247(a)(1)	RSS-247.5.1 RSS-Gen.6.7	Emission Bandwidth	PASS	
15.247(a)(1)	RSS-247.5.1	Carrier Frequency Separation	PASS	
15.247(a)(1)	RSS-247.5.1	Number of Hopping Frequencies	PASS	
15.247(a)(1)	RSS-247.5.1	Average Time of Occupancy (Dwell Time)	PASS	
15.247(b)(1)	RSS-247.5.4 RSS-Gen 6.12	Maximum Peak Conducted Output Power	PASS	
15.247(d)	RSS-247 5.5	Conducted Spurious Emissions	PASS	
15.247(d) 15.209 15.205	RSS-Gen 8.9 RSS-Gen 8.10 RSS-Gen 6.13 RSS-247 3.3 RSS-247 5.5	Radiated Spurious Emissions	PASS	
15.207	RSS-Gen 8.8	Conducted Emission	PASS	
15.203 15.247(b)	RSS-Gen 6.8 RSS-247 5.4	Antenna Application	PASS	
15.247 (a) (1)/g/h	-	Frequency Hopping System	PASS	
NOTE1: N/A (Not Applicable) NOTE2: According to FCC OET KDB 558074, the report use radiated measurements in the restricted frequency bands. In addition, the radiated test is also performed to ensure the emissions emanating from the device cabinet also comply with the applicable limits.				

RELATED SUBMITTAL(S) / GRANT(S):

This submittal(s) (test report) is intended for **FCC ID: 2AWFB-8373**filing to comply with Section 15.247 of the FCC Part 15, Subpart C Rules.

4 TEST METHODOLOGY

4.1 GENERAL DESCRIPTION OF APPLIED STANDARDS

According to its specifications, the EUT must comply with the requirements of the following standards:
FCC 47 CFR Part 2, Subpart J
FCC 47 CFR Part 15, Subpart C
IC RSS-GEN, Issue 5(04-2018)+A1(03-2019)+A2(02-2021)
IC RSS-247 Issue 2(02-2017)
FCC KDB 558074 D01 15.247 Meas Guidance v05r02

4.2 MEASUREMENT EQUIPMENT USED

Conducted Emission Test Equipment

Equipment	Manufacturer	Model No.	Serial No.	Last Cal.	Cal. Interval
Test Receiver	Rohde & Schwarz	ESCI	101384	May 15, 2021	1 Year
L.I.S.N.	Rohde & Schwarz	ENV216	5	May 15, 2021	1 Year
L.I.S.N.	Kyoritsu	KNW-407	8-1492-9	May 16, 2021	1 Year

For Spurious Emissions Test

Equipment	Manufacturer	Model No.	Serial No.	Last Cal.	Cal. Interval
EMI Test Receiver	Rohde & Schwarz	ESU 26	100154	May 15, 2021	1 Year
Pre-Amplifie	Lunar EM	LNA30M3G-25	J10100000070	May 15, 2021	1 Year
Bilog Antenna	Schwarzbeck	VULB9163	661	Aug.22, 2021	2 Year
Horn antenna	Schwarzbeck	BBHA9120D	9120D-1177	Jul.04, 2020	2 Year
Pre-Amplifie	SKET	LNPA_0118G-45	SK2019051801	May 15, 2021	1 Year
Loop Antenna	Schwarzbeck	FMZB1519	1519-012	Jun.12, 2021	2 Year
Spectrum Analyzer	Rohde & Schwarz	FSV40	100967	May 15, 2021	1 Year
Horn antenna	Schwarzbeck	BBHA9120D	9120D-1178	Jul.04, 2020	2 Year
Band reject Filter(50dB)	WI/DE	WRCGV-2400(2400-2485MHz)	2	May 15, 2021	1 Year

For other test items:

Equipment	Manufacturer	Model No.	Serial No.	Last Cal.	Cal. Interval
Wireless Connectivity Tester	R&S	CMW270	102543	Aug. 27, 2021	1Year
Automatic Control Unit	Tonscend	JS0806-2	21I8060480	Nov. 18, 2021	1Year
Signal Analyzer	KEYSIGHT	N9010B	MY60240204	Sep. 30, 2021	1Year
Signal Analyzer	KEYSIGHT	N9010B	MY60242456	Jan. 21, 2022	1Year
Analog Signal Generator	KEYSIGHT	N5173B	MY61252625	Oct. 29, 2021	1Year
UP/DOWN-Converter	R&S	CMW-Z800A	100274	Sep. 14, 2021	1Year
Vector Signal Generator	KEYSIGHT	N5182B	MY61252674	Oct. 28, 2021	1Year
Frequency Extender	KEYSIGHT	N5182BX07	MY59362541	Nov. 23, 2021	1Year
Temperature&Humidity test chamber	ESPEC	EL-02KA	12107166	Jul. 03, 2021	1 Year

4.3 DESCRIPTION OF TEST MODES

The EUT has been tested under its typical operating condition.
The EUT configuration for testing is installed on RF field strength measurement to meet the Commissions requirement and operating in a manner which intends to maximize its emission characteristics in a continuous normal application.

The Transmitter was operated in the normal operating mode. The TX frequency was fixed which was for the purpose of the measurements.

Test of channel included the lowest and middle and highest frequency to perform the test, then record on this report.

Those data rates (1Mbps for GFSK modulation(DH5); 2Mbps for π/4-DQPSK modulation(2DH5); 3Mbps for 8DPSK modulation(3DH5);)were used for all test.

Pre-defined engineering program for regulatory testing used to control the EUT for staying in continuous transmitting and receiving mode is programmed.

Frequency and Channel list for Bluetooth

Channel	Frequency (MHz)	Channel	Frequency (MHz)	Channel	Frequency (MHz)
0	2402	39	2441	…	…
1	2403	40	2442	76	2478
2	2404	41	2443	77	2479
…	…	…	…	78	2480
Note: fc=2402MHz+(k-1)×1MHz k=1 to 79					

Test Frequency and channel for Bluetooth

Lowest Frequency		Middle Frequency		Highest Frequency	
Channel	Frequency (MHz)	Channel	Frequency (MHz)	Channel	Frequency (MHz)
0	2402	39	2441	78	2480

5 FACILITIES AND ACCREDITATIONS

5.1 FACILITIES

All measurement facilities used to collect the measurement data are located at:

EMTEK (Shenzhen) Co., Ltd.
Building 69, Majialong Industry Zone District, Nanshan District, Shenzhen, China
The sites are constructed in conformance with the requirements of ANSI C63.7, ANSI C63.4 and CISPR Publication 22.

5.2 EQUIPMENT

Radiated emissions are measured with one or more of the following types of linearly polarized antennas: tuned dipole, biconical, log periodic, bi-log, and/or ridged waveguide, horn. Spectrum analyzers with preselectors and quasi-peak detectors are used to perform radiated measurements.

Conducted emissions are measured with Line Impedance Stabilization Networks and EMI Test Receivers.

Calibrated wideband preamplifiers, coaxial cables, and coaxial attenuators are also used for making measurements.

All receiving equipment conforms to CISPR Publication 16-1, “Radio Interference Measuring Apparatus and Measurement Methods.”

5.3 LABORATORY ACCREDITATIONS AND LISTINGS

Site Description		
EMC Lab.	:	**Accredited by CNAS** The Certificate Registration Number is L2291. The Laboratory has been assessed and proved to be in compliance with CNAS-CL01 (identical to ISO/IEC 17025:2017) **Accredited by FCC** Designation Number: CN1204 Test Firm Registration Number: 882943 **Accredited by A2LA** The Certificate Number is 4321.01. Accredited by Industry Canada The Conformity Assessment Body Identifier is CN0008
Name of Firm	:	EMTEK (SHENZHEN) CO., LTD.
Site Location	:	Building 69, Majialong Industry Zone, Nanshan District, Shenzhen, Guangdong, China

6 TEST SYSTEM UNCERTAINTY

The following measurement uncertainty levels have been estimated for tests performed on the apparatus:

Test Parameter	Measurement Uncertainty
Radio Frequency	±1x10^-5
Maximum Peak Output Power Test	±1.0dB
Conducted Emissions Test	±2.0dB
Radiated Emission Test	±2.0dB
Power Density	±2.0dB
Occupied Bandwidth Test	±1.0dB
Band Edge Test	±3dB
All emission, radiated	±3dB
Antenna Port Emission	±3dB
Temperature	±0.5℃
Humidity	±3%

Measurement Uncertainty for a level of Confidence of 95%

7 SETUP OF EQUIPMENT UNDER TEST

7.1 RADIO FREQUENCY TEST SETUP 1

The Bluetooth component's antenna ports(s) of the EUT are connected to the measurement instrument per an appropriate attenuator. The EUT is controlled by PC/software to emit the specified signals for the purpose of measurements.

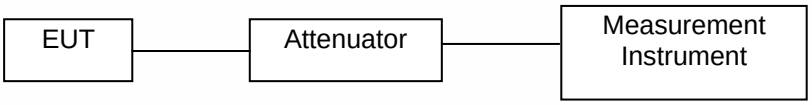

7.2 RADIO FREQUENCY TEST SETUP 2

The test site semi-anechoic chamber has met the requirement of NSA tolerance 4 dB according to the standards: ANSI C63.10. The test distance is 3m.The setup is according to the requirements in Section 13.1.4.1 of ANSI C63.10-2013 and CAN/CSA-CEI/IEC CISPR 22.

Below 30MHz：
The EUT is placed on a turntable 0.8meters above the ground in the chamber, 3 meter away from the antenna (loop antenna). The Antenna should be positioned with its plane vertical at the specified distance from the EUT and rotated about its vertical axis for maximum response at each azimuth about the EUT. The center of the loop shall be 1 m above the ground. For certain applications, the loop antenna plane may also need to be positioned horizontally at the specified distance from the EUT.

Above 30MHz：
The EUT is placed on a turntable 0.8meters above the ground in the chamber, 3 meter away from the antenna. The maximal emission value is acquired by adjusting the antenna height, polarisation and turntable azimuth. Normally, the height range of antenna is 1 m to 4 m, the azimuth range of turntable is 0° to 360°, and the receive antenna has two polarizations Vertical (V) and Horizontal (H).

Above 1GHz:
(Note: the FCC's permission to use 1.5m as an alternative per TCBC Conf call of Dec. 2, 2014.)
The EUT is placed on a turntable 1.5 meters above the ground in the chamber, 3 meter away from the antenna. The maximal emission value is acquired by adjusting the antenna height, polarisation and turntable azimuth. Normally, the height range of antenna is 1 m to 4 m, the azimuth range of turntable is 0° to 360°, and the receive antenna has two polarizations Vertical (V) and Horizontal (H).

(a) Radiated Emission Test Set-Up, Frequency Below 30MHz

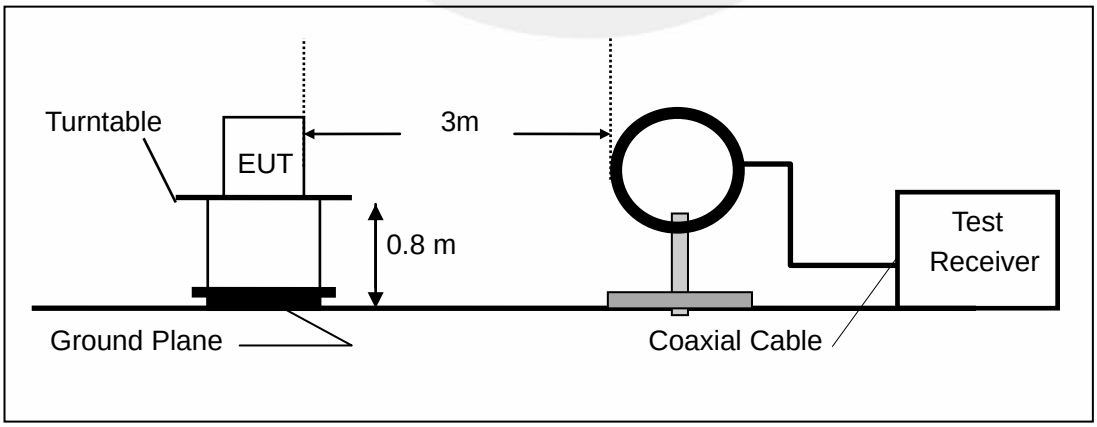

(b)Radiated Emission Test Set-Up, Frequency Below 1000MHz

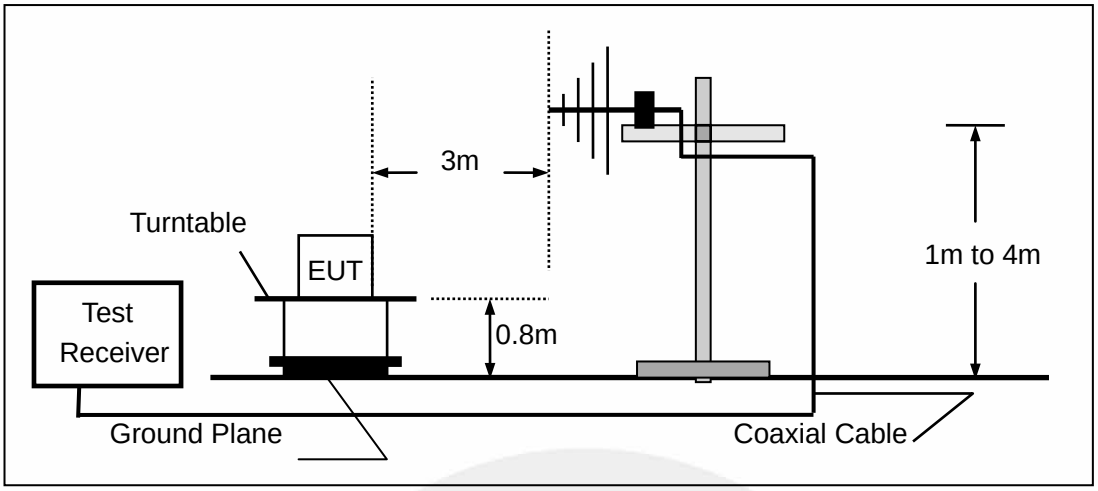

(c) Radiated Emission Test Set-Up, Frequency above 1000MHz

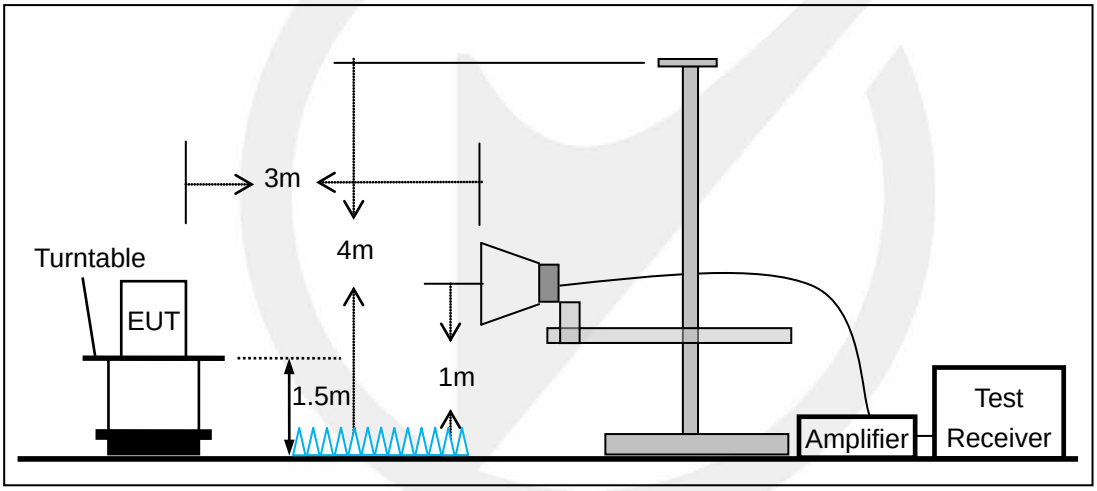

7.3 CONDUCTED EMISSION TEST SETUP

The mains cable of the EUT (Perfect Share Mini) must be connected to LISN. The LISN shall be placed 0.8m from the boundary of EUT and bonded to a ground reference plane for LISN mounted on top of the ground reference plane. This distance is between the closest points of the LISN and the EUT. All other units of the EUT and associated equipment shall be at least 0.8m from the LISN.

Ground connections, where required for safety purposes, shall be connected to the reference ground point of the LISN and, where not otherwise provided or specified by the manufacturer, shall be of same length as the mains cable and run parallel to the mains connection at a separation distance of not more than 0.8m.

According to the requirements in Section 13.1.4.1 of ANSI C63.10-2013 Conducted emissions from the EUT measured in the frequency range between 0.15 MHz and 30 MHz using CISPR Quasi-Peak and average detector mode.

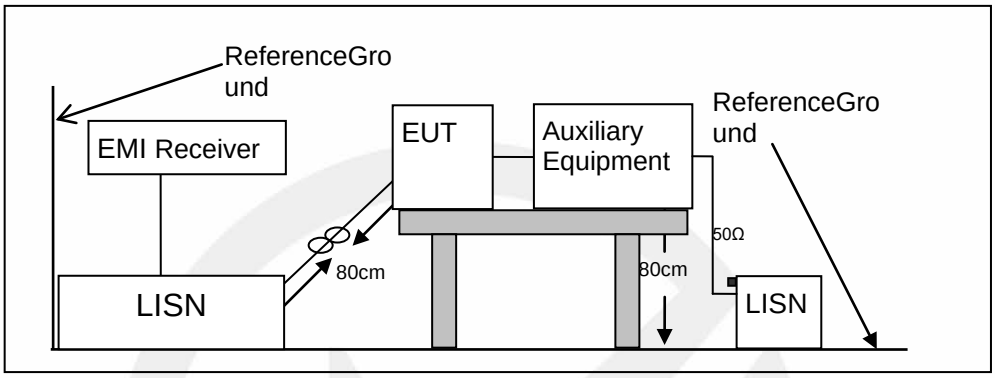

7.4 BLOCK DIAGRAM CONFIGURATION OF TEST SYSTEM

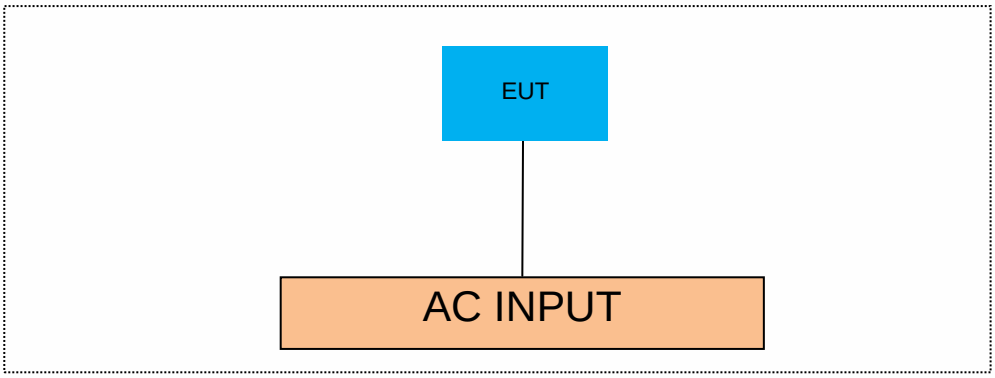

7.5 SUPPORT EQUIPMENT

EUT Cable List and Details			
Cable Description	Length (m)	Shielded/Unshielded	With / Without Ferrite
/	/	/	/

Auxiliary Cable List and Details			
Cable Description	Length (m)	Shielded/Unshielded	With / Without Ferrite
/	/	/	/

Auxiliary Equipment List and Details			
Description	Manufacturer	Model	Serial Number
/	/	/	/

Notes:

1. *All the equipment/cables were placed in the worst-case configuration to maximize the emission during the test.*
2. *Grounding was established in accordance with the manufacturer's requirements and conditions for the intended use.*

8 FREQUENCY HOPPING SYSTEM REQUIREMENTS

8.1 Standard Applicable

According to FCC Part 15.247(a)(1), The system shall hop to channel frequencies that are selected at the system hopping rate from a pseudo randomly ordered list of hopping frequencies. Each frequency must be used equally on the average by each transmitter. The system receivers shall have input bandwidths that match the hopping channel bandwidths of their corresponding transmitters and shall shift frequencies in synchronization with the transmitted signals.

(g) Frequency hopping spread spectrum systems are not required to employ all available hopping channels during each transmission. However, the system, consisting of both the transmitter and the receiver, must be designed to comply with all of the regulations in this section should the transmitter be presented with a continuous data (or information) stream. In addition, a system employing short transmission bursts must comply with the definition of a frequency hopping system and must distribute its transmissions over the minimum number of hopping channels specified in this section.

(h) The incorporation of intelligence within a frequency hopping spread spectrum system that permits the system to recognize other users within the spectrum band so that it individually and independently chooses and adapts its hopsets to avoid hopping on occupied channels is permitted. The coordination of frequency hopping systems in any other manner for the express purpose of avoiding the simultaneous occupancy of individual hopping frequencies by multiple transmitters is not permitted.

8.2 EUT Pseudorandom Frequency Hopping Sequence

The channel is represented by a pseudo-random hopping sequence hopping through the 79 RF channels. The hopping sequence is unique for the piconet and is determined by the Bluetooth device address of the master; thephase in the hopping sequence is determined by the Bluetooth clock of the master.The channel is divide into time slots where each slot corresponds to an RF hop frequency. Consecutive hopscorrespond to different RF hop frequencies. The normal hop is 1 600 hops/s.

The pseudorandom sequence may be generated in a nine-stage shift register whose 5th and 9th stage outputs are added in a modulo-two addition stage, and the result is fed back to the input of the first stage. The sequence begins with the first ONE of 9 consecutive ONEs; i.e. the shift register is initialized with nine ones. Number of shift register stages: 9
Length of pseudo-random sequence: 29-1 = 511 bits
Longest sequence of zeros: 8 (non-inverted signal)

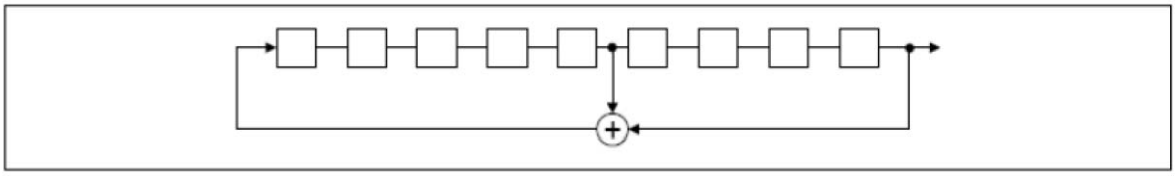

Linear Feedback Shift Register for Generation of the PRBS sequence

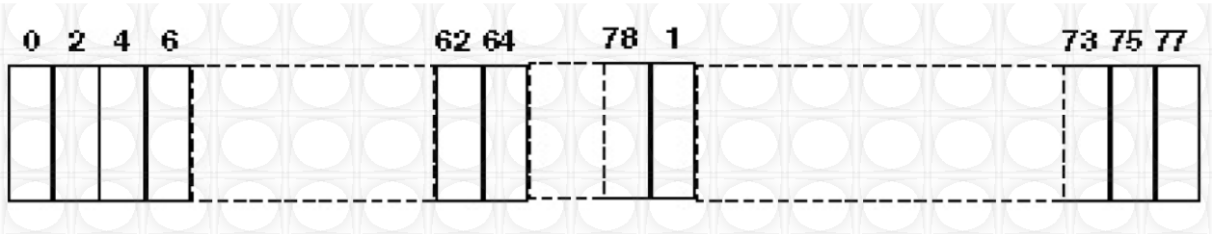

Each frequency used equally on the average by each transmitter.
The system receiver have input bandwidths that match the hopping channel bandwidths of their corresponding transmitters and shift frequencies in synchronization with the transmitted signals.

8.3 Equal Hopping Frequency Use

All Bluetooth units participating in the piconet are time and hop-synchronized to the channel.

Example of a 79 hopping sequence in data mode:
35, 27, 6, 44, 14, 61, 74, 32, 1, 11, 23, 2, 55, 65, 29, 3, 9, 52, 78, 58, 40, 25, 0, 7, 18, 26, 76, 60, 47, 50, 2, 5, 16, 37, 70, 63, 66, 54, 20, 13, 4, 8, 15, 21, 26, 10, 73, 77, 67, 69, 43, 24, 57, 39, 46, 72, 48, 33, 17, 31, 75, 19, 41, 62, 68, 28, 51, 66, 30, 56, 34, 59, 71, 22, 49, 64, 38, 45, 36, 42, 53
Each Frequency used equally on the average by each transmitter

8.4 Frequency Hopping System

This transmitter device is frequency hopping device, and complies with FCC part 15.247 rule.

This device uses Bluetooth radio which operates in 2400-2483.5 MHz band. Bluetooth uses a radio technology called frequency-hopping spread spectrum, which chops up the data being sent and transmits chunks of it on up to 79 bands (1 MHz each; centred from 2402 to 2480 MHz) in the range 2,400-2,483.5 MHz. The transmitter switches hop frequencies 1,600 times per second to assure a high degree of data security. All Bluetooth devices participating in a given piconet are synchronized to the frequency-hopping channel for the piconet. The frequency hopping sequence is determined by the master's device address and the phase of the hopping sequence (the frequency to hop at a specific time) is determined by the master's internal clock. Therefore, all slaves in a piconet must know the master's device address and must synchronize their clocks with the master's clock.

Adaptive Frequency Hopping (AFH) was introduced in the Bluetooth specification to provide an effective way for a Bluetooth radio to counteract normal interference. AFH identifies "bad" channels, where either other wireless devices are interfering with the Bluetooth signal or the Bluetooth signal is interfering with another device. The AFH- enabled Bluetooth device will then communicate with other devices within its piconet to share details of any identified bad channels. The devices will then switch to alternative available "good" channels, away from the areas of interference, thus having no impact on the bandwidth used.

9 TEST REQUIREMENTS

9.1 20DB&99%BANDWIDTH

9.1.1 Applicable Standard

According to FCC Part 15.247(a)(1) and KDB 558074 D01 15.247 MEAS GUIDANCE v05r02
According to IC RSS-247.5.1 and RSS-Gen.6.7

9.1.2 Conformance Limit

No limit requirement.

9.1.3 Test Configuration

Test according to clause 7.1 radio frequency test setup 1

9.1.4 Test Procedure

The EUT was operating inBluetoothmode and controlled its channel. Printed out the test result from the spectrum by hard copy function.
The RF output of EUT was connected to the spectrum analyzer by RF cable and attenuator. The path loss was compensated to the results for each measurement.
Set to the maximum power setting and enable the EUT transmit continuously
Set RBW = 30 kHz.
Set the video bandwidth (VBW) =100kHz.
Set Span= approximately 2 to 3 times the 20 dB bandwidth
Set Detector = Peak.
Set Trace mode = max hold.
Set Sweep = auto couple.
The EUT should be transmitting at its maximum data rate. Allow the trace to stabilize.Use the marker-to-peak function to set the marker to the peak of the emission. Use themarker-delta function to measure 20 dB down one side of the emission. Reset the markerdeltafunction, and move the marker to the other side of the emission, until it is (asclose as possible to) even with the reference marker level. The marker-delta reading atthis point is the 20 dB bandwidth of the emission.
If this value varies with differentmodes of operation (e.g., data rate, modulation format, etc.), repeat this test for eachvariation.
Measure and record the results in the test report.

Test Results

Temperature:	25° C
Relative Humidity:	45%
ATM Pressure:	1011 mbar

Note: N/A

20dB Emission Bandwidth

TestMode	Antenna	Freq(MHz)	20dB EBW[MHz]	FL[MHz]	FH[MHz]	Limit[MHz]	Verdict
DH5	Ant1	2402	0.948	2401.544	2402.492	---	---
		2441	0.942	2440.553	2441.495	---	---
		2480	0.945	2479.547	2480.492	---	---
2DH5	Ant1	2402	1.281	2401.382	2402.663	---	---
		2441	1.266	2440.385	2441.651	---	---
		2480	1.281	2479.382	2480.663	---	---
3DH5	Ant1	2402	1.266	2401.367	2402.633	---	---
		2441	1.275	2440.376	2441.651	---	---
		2480	1.287	2479.367	2480.654	---	---

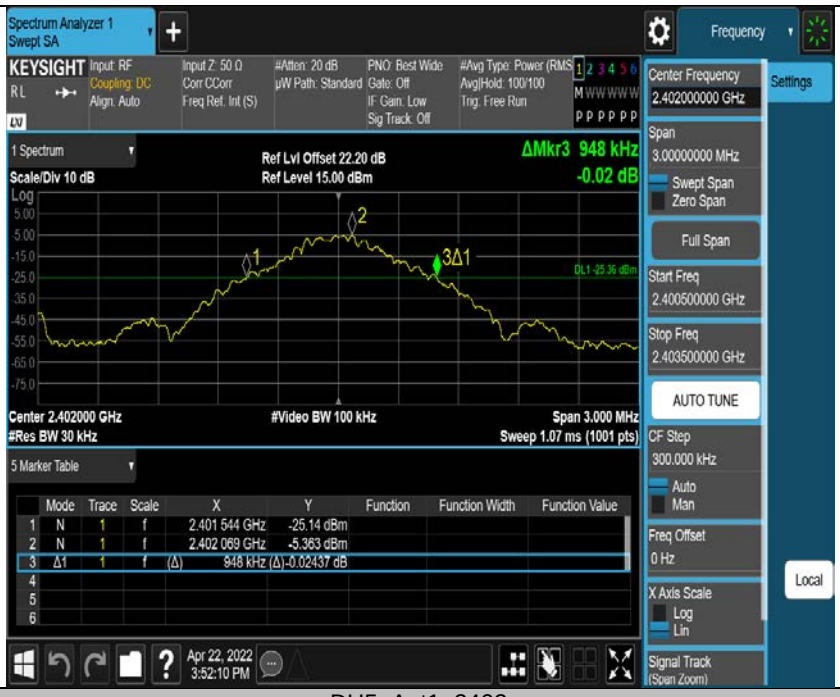

DH5_Ant1_2402

DH5_Ant1_2441

DH5_Ant1_2480

2DH5_Ant1_2402

2DH5_Ant1_2441

2DH5_Ant1_2480

3DH5_Ant1_2402

3DH5_Ant1_2441

3DH5_Ant1_2480

Occupied Channel Bandwidth

TestMode	Antenna	Freq(MHz)	OCB [MHz]	FL[MHz]	FH[MHz]	Limit[MHz]	Verdict
DH5	Ant1	2402	0.86688	2401.574	2402.440	---	---
		2441	0.87255	2440.572	2441.444	---	---
		2480	0.87231	2479.575	2480.447	---	---
2DH5	Ant1	2402	1.1825	2401.419	2402.602	---	---
		2441	1.1918	2440.416	2441.608	---	---
		2480	1.1890	2479.417	2480.606	---	---
3DH5	Ant1	2402	1.1800	2401.421	2402.601	---	---
		2441	1.1855	2440.419	2441.605	---	---
		2480	1.1930	2479.414	2480.607	---	---

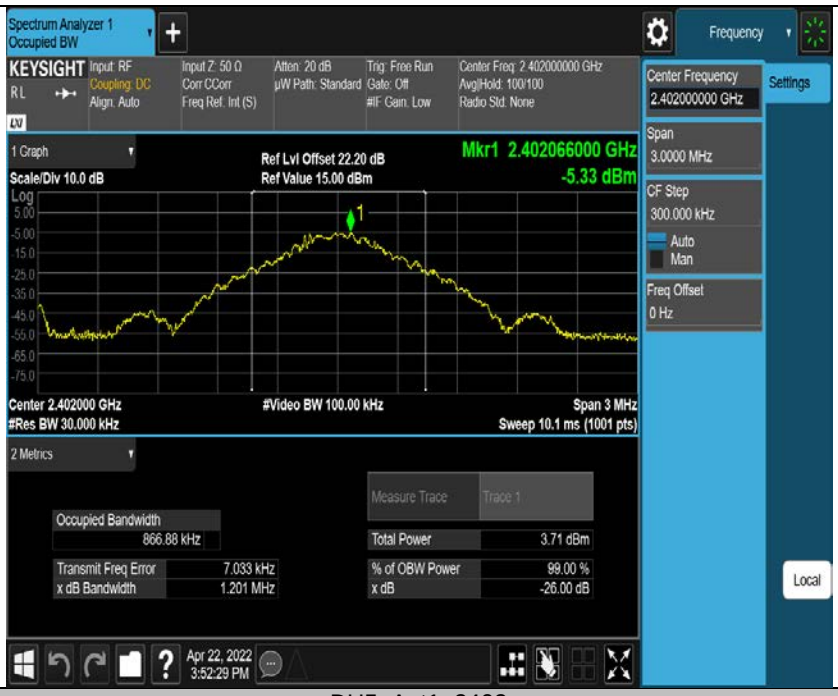

DH5_Ant1_2402

DH5_Ant1_2441

DH5_Ant1_2480

2DH5_Ant1_2402

2DH5_Ant1_2441

2DH5_Ant1_2480

3DH5_Ant1_2402

3DH5_Ant1_2441

3DH5_Ant1_2480

9.2 CARRIER FREQUENCY SEPARATION

9.2.1 Applicable Standard

According to FCC Part 15.247(a)(1) and KDB 558074 D01 15.247 MEAS GUIDANCE v05r02
According to IC RSS-247.5.1

9.2.2 Conformance Limit

Frequency hopping systems operating in the 2400-2483.5MHz band shall have hoppingchannel carrier frequencies separated by a minimum of 25kHz or the 20dB bandwidth ofthe hopping channel, whichever is greater.
In case of an output power less than 125mW,the frequency hopping system may have channels separated by a minimum of 25kHz ortwo-thirds of the 20dB bandwidth of the hopping channel, whichever is greater.

9.2.3 Test Configuration

Test according to clause 7.1 radio frequency test setup 1

9.2.4 Test Procedure

The EUT must have its hopping function enabled. Use the following spectrum analyzersettings:
Set the RBW =300kHz. Set VBW =300kHz.
Set the span = wide enough to capture the peaks of two adjacent channels
Set Sweep time = auto couple.
Set Detector = peak. Set Trace mode = max hold.
Allow the trace to stabilize. Use the marker-delta function to determine the separation between the peaks of the adjacent channels. The limit is specified in one of the subparagraphs of this Section. Submit this plot.

Test Results

Temperature:	25° C
Relative Humidity:	45%
ATM Pressure:	1011 mbar

Note: For GFSK Limit =20dB bandwidth;
For pi/4-DQPSK, 8DPSK Limit = 20dB bandwidth * 2/3

TestMode	Antenna	Freq(MHz)	Result[MHz]	Limit[MHz]	Verdict
DH5	Ant1	Hop	1.004	≥0.948	PASS
		Hop_2402	1.006	≥0.948	PASS
		Hop_2441	0.974	≥0.948	PASS
		Hop_2480	1	≥0.948	PASS
2DH5	Ant1	Hop	1.024	≥0.854	PASS
		Hop_2402	1.198	≥0.854	PASS
		Hop_2441	0.996	≥0.854	PASS
		Hop_2480	0.956	≥0.854	PASS
3DH5	Ant1	Hop	0.988	≥0.858	PASS
		Hop_2402	0.972	≥0.858	PASS
		Hop_2441	1.02	≥0.858	PASS
		Hop_2480	0.998	≥0.858	PASS

DH5_Ant1_Hop

DH5_Ant1_Hop_2402

DH5_Ant1_Hop_2441

DH5_Ant1_Hop_2480

2DH5_Ant1_Hop

2DH5_Ant1_Hop_2402

2DH5_Ant1_Hop_2441

2DH5_Ant1_Hop_2480

3DH5_Ant1_Hop

3DH5_Ant1_Hop_2402

3DH5_Ant1_Hop_2441

3DH5_Ant1_Hop_2480

9.3 NUMBER OF HOPPING FREQUENCIES

9.3.1 Applicable Standard

According to FCC Part 15.247(a)(1)and KDB 558074 D01 15.247 MEAS GUIDANCE v05r02
According to IC RSS-247.5.1

9.3.2 Conformance Limit

Frequency hopping systems operating in the 2400-2483.5MHz band shall use at least15 channels.

9.3.3 Test Configuration

Test according to clause 7.1 radio frequency test setup 1

9.3.4 Test Procedure

The EUT must have its hopping function enabled. Use the following spectrum analyzer settings:
Span = the frequency band of operation (2400-2483.5MHz)
RBW =300KHz
VBW ⩾ RBW
Sweep = auto
Detector function = peak
Trace = max hold
Allow the trace to stabilize. It may prove necessary to break the span up to sections, inorder to clearly show all of the hopping frequencies.

Test Results

Temperature:	25˚ C
Relative Humidity:	45%
ATM Pressure:	1011 mbar

Note: N/A

TestMode	Antenna	Freq(MHz)	Result[Num]	Limit[Num]	Verdict
DH5	Ant1	Hop	79	≥15	PASS

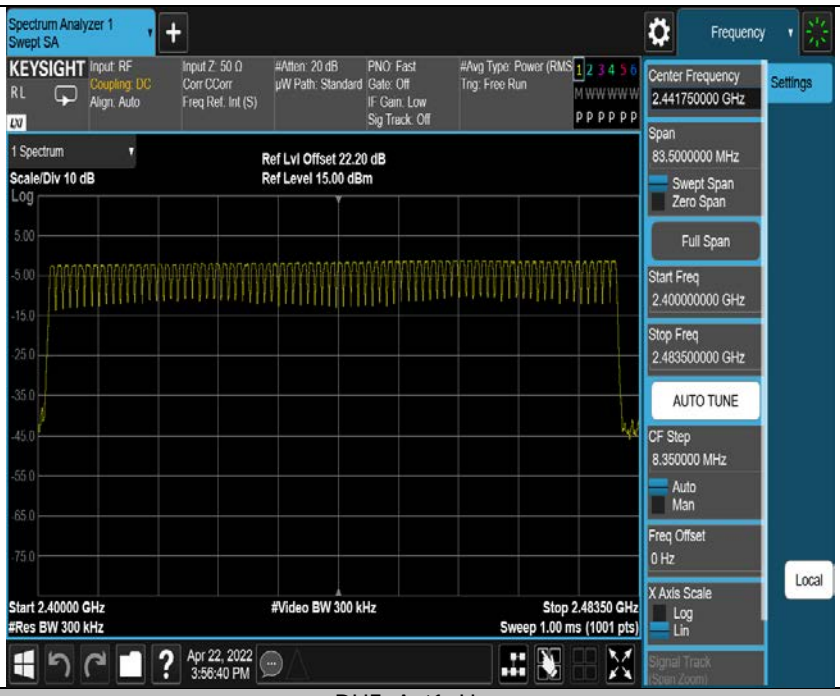
Spectrum Analyzer 1
Swept SA
KEYSIGHT
Input: RF
Coupling: DC
Align: Auto
Input Z: 50 Ω
Corr CCorr
Freq Ref: Int (S)
#Atten: 20 dB
µW Path: Standard
PNO: Fast
Gate: Off
IF Gain: Low
Sig Track: Off
#Avg Type: Power (RMS)
Trig: Free Run
1 Spectrum
Scale/Div 10 dB
Ref Lvl Offset 22.20 dB
Ref Level 15.00 dBm
Log
5.00
-5.00
-15.0
-25.0
-35.0
-45.0
-55.0
-65.0
-75.0
Start 2.40000 GHz
#Res BW 300 kHz
#Video BW 300 kHz
Stop 2.48350 GHz
Sweep 1.00 ms (1001 pts)
Apr 22, 2022
3:56:40 PM
Frequency
Center Frequency
2.441750000 GHz
Span
83.5000000 MHz
Swept Span
Zero Span
Full Span
Start Freq
2.400000000 GHz
Stop Freq
2.483500000 GHz
AUTO TUNE
CF Step
8.350000 MHz
Auto
Man
Freq Offset
0 Hz
X Axis Scale
Log
Lin
Settings
Local

DH5_Ant1_Hop

9.4 AVERAGE TIME OF OCCUPANCY (DWELL TIME)

9.4.1 Applicable Standard

According to FCC Part 15.247(a)(1) and KDB 558074 D01 15.247 MEAS GUIDANCE v05r02
According to IC RSS-247.5.1

9.4.2 Conformance Limit

For frequency hopping systems operating in the 2400-2483.5MHz band, the averagetime of occupancy on any channel shall not be greater than 0.4s within a period of 0.4smultiplied by the number of hopping channels employed.

9.4.3 Test Configuration

Test according to clause 7.1 radio frequency test setup 1

9.4.4 Test Procedure

The EUT must have its hopping function enabled. Use the following spectrum analyzersettings:
Span = zero span, centered on a hopping channel
RBW = 1 MHz
VBW ≥ RBW
Sweep = as necessary to capture the entire dwell time per hopping channel
Detector function = peak
Trace = max hold
If possible, use the marker-delta function to determine the dwell time. If this value varies with different modes of operation (e.g., data rate, modulation format, etc.), repeat this test for each variation. The limit is specified in one of the subparagraphsof this Section.

9.4.5 Test Results

Temperature:	25˚ C
Relative Humidity:	45%
ATM Pressure:	1011 mbar

Note: TotalHops(DH1)=(1600/2/79)*31.6
TotalHops(DH3)=(1600/4/79)*31.6
TotalHops(DH5)=(1600/6/79)*31.6
DwellTime=BurstWidth*TotalHops

TestMode	Antenna	Freq(MHz)	BurstWidth [ms]	TotalHops [Num]	Result[s]	Limit[s]	Verdict
DH1	Ant1	Hop	0.35	320	0.112	≤0.4	PASS
DH3	Ant1	Hop	1.61	160	0.258	≤0.4	PASS
DH5	Ant1	Hop	2.86	106.67	0.305	≤0.4	PASS

DH1_Ant1_Hop

DH3_Ant1_Hop

Spectrum Analyzer 1
Swept SA
KEYSIGHT
Input: RF
Coupling: DC
Align: Auto
Input Z: 50 Ω
Corr CCorr
Freq Ref: Int (S)
#Atten: 20 dB
µW Path: Standard
PNO: Fast
Gate: Off
IF Gain: Low
Sig Track: Off
#Avg Type: Power (RMS)
Trig: Video
Trig Delay: -2.000 ms
1 Spectrum
Scale/Div 10 dB
Log
Ref Lvl Offset 21.97 dB
Ref Level 15.00 dBm
ΔMkr2 2.860 ms
-0.04 dB
TRIG LVL
Center 2.441000000 GHz
Res BW 1.0 MHz
Span 0 Hz
Sweep 10.0 ms (1001 pts)
Apr 22, 2022
3:56:56 PM
Frequency
Settings
Center Frequency
2.441000000 GHz
Span
0.00000000 Hz
Swept Span
Zero Span
Full Span
Start Freq
2.441000000 GHz
Stop Freq
2.441000000 GHz
AUTO TUNE
CF Step
1.000000 MHz
Auto
Man
Freq Offset
0 Hz
X Axis Scale
Log
Lin
Local

DH5_Ant1_Hop

9.5 MAXIMUM PEAK CONDUCTED OUTPUT POWER

9.5.1 Applicable Standard

According to FCC Part 15.247(b)(1) and KDB 558074 D01 15.247 MEAS GUIDANCE v05r02
According to IC RSS-247.5.4 and RSS-Gen 6.12

9.5.2 Conformance Limit

The max For frequency hopping systems operating in the 2400-2483.5 MHz band employing at least 75 non-overlapping hopping channels: 1 watt. For all other frequency hopping systems in the 2400-2483.5 MHz band: 0.125 watts.

9.5.3 Test Configuration

Test according to clause 7.1 radio frequency test setup 1

9.5.4 Test Procedure

As an alternative to a peak power measurement, compliance with the limit can be based on a measurement of the maximum conducted output power.
Use the following spectrum analyzer settings:
Set Span = approximately 5 times the 20 dB bandwidth, centered on a hopping channel(about 8MHz)
Set RBW > the 20 dB bandwidth of the emission being measured(about 3MHz)
Set VBW ≥ RBW
Set Sweep = auto
Set Detector function = peak
Set Trace = max hold
Allow the trace to stabilize. Use the marker-to-peak function to set the marker to the peak of the emissionto determine the peak amplitude level.

Test Results

Temperature:	25˚ C
Relative Humidity:	45%
ATM Pressure:	1011 mbar

Note: N/A

Test Mode	Antenna	Freq(MHz)	Conducted Peak Powert[dBm]	Conducted Limit[dBm]	Verdict
DH5	Ant1	2402	-1.7	≤20.97	PASS
		2441	-1.14	≤20.97	PASS
		2480	-0.84	≤20.97	PASS
2DH5	Ant1	2402	-0.91	≤20.97	PASS
		2441	-0.56	≤20.97	PASS
		2480	-0.17	≤20.97	PASS
3DH5	Ant1	2402	-0.56	≤20.97	PASS
		2441	-0.14	≤20.97	PASS
		2480	0.33	≤20.97	PASS

DH5_Ant1_2402

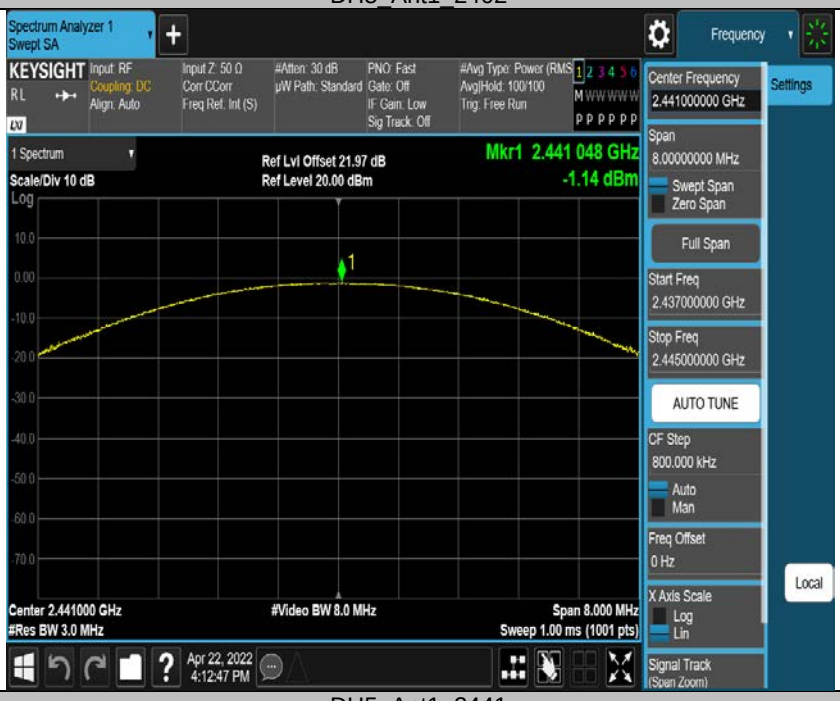

DH5_Ant1_2441

DH5_Ant1_2480

2DH5_Ant1_2402

2DH5_Ant1_2441

2DH5_Ant1_2480

3DH5_Ant1_2402

3DH5_Ant1_2441

3DH5_Ant1_2480

9.6 CONDUCTED SUPRIOUS EMISSION

9.6.1 Applicable Standard

According to FCC Part 15.247(d) and KDB 558074 D01 15.247 MEAS GUIDANCE v05r02
According to IC RSS-247 5.5

9.6.2 Conformance Limit

In any 100 kHz bandwidth outside the frequency band in which the spread spectrum intentional radiator is operating, the radio frequency power that is produced by the intentional radiator shall be at least 20 dB below that in the 100 kHz bandwidth within the band that contains the highest level of the desired power, based on either an RF conducted, provided the transmitter demonstrates compliance with the peak conducted power limits.

9.6.3 Test Configuration

Test according to clause 7.1 radio frequency test setup 1

9.6.4 Test Procedure

The transmitter output (antenna port) was connected to the spectrum analyzer

- **Reference level measurement**

Establish a reference level by using the following procedure:
Set instrument center frequency to DSS channel center frequency.
Set Span = approximately 5 times the 20 dB bandwidth, centered on a hopping channel.
Set the RBW = 100 kHz. Set the VBW ≥ 3 x RBW.
Set Detector = peak. Set Sweep time = auto couple.
Set Trace mode = max hold. Allow trace to fully stabilize.
Use the peak marker function to determine the maximum Maximumconducetedlevel.
Note that the channel found to contain the maximum conduceted level can be used to establish the reference level.

- **Band-edge measurement**

Use the following spectrum analyzer settings:
Span = wide enough to capture the peak level of the emission operating on the channel closest to the band-edge, as well as any modulation products which fall outside of the authorized band of operation
Set RBW ≥ 1% of the span=100kHzSet VBW ≥3 x RBW
Set Sweep = autoSet Detector function = peakSet Trace = max hold
Allow the trace to stabilize. Set the marker on the emission at the bandedge, or on the highest modulation product outside of the band, if this level is greater than that at the bandedge. Enable the marker-delta function, then use the marker-to-peak function to move the marker to the peak of the in-band emission. The marker-delta value now displayed must comply with the limit specified in this Section.
Now, using the same instrument settings, enable the hopping function of the EUT. Allow the trace to stabilize. Follow the same procedure listed above to determine if any spurious emissions caused by the hopping function also comply with the specified limit.

- **Emission level measurement**

Use the following spectrum analyzer settings:
Span = wide enough to capture the peak level of the in-band emission and all spurious emissions (e.g., harmonics) from the lowest frequency generated in the EUT up through the 10th harmonic.(30MHz to 25GHz).Set RBW = 100 kHzSet VBW ≥ RBW
Set Sweep = autoSet Detector function = peakSet Trace = max hold
Allow the trace to stabilize. Set the marker on the peak of any spurious emission recorded. The level displayed must comply with the limit specified in this Section.

9.6.5 Test Results

Temperature:	25˚C
Relative Humidity:	45%□
ATM Pressure:	1011 mbar

Note: N/A

Band edge measurements

TestMode	Antenna	ChName	Freq(MHz)	RefLevel [dBm]	Result [dBm]	Limit [dBm]	Verdict
DH5	Ant1	Low	2402	-2.31	-36.91	≤-22.31	PASS
		High	2480	-1.28	-46.87	≤-21.28	PASS
		Low	Hop_2402	-3.34	-47.22	≤-23.34	PASS
		High	Hop_2480	-2.06	-46.81	≤-22.06	PASS
2DH5	Ant1	Low	2402	-2.32	-37.37	≤-22.32	PASS
		High	2480	-1.33	-44.92	≤-21.33	PASS
3DH5	Ant1	Low	2402	-2.19	-35.99	≤-22.19	PASS
		High	2480	-1.24	-45.66	≤-21.24	PASS

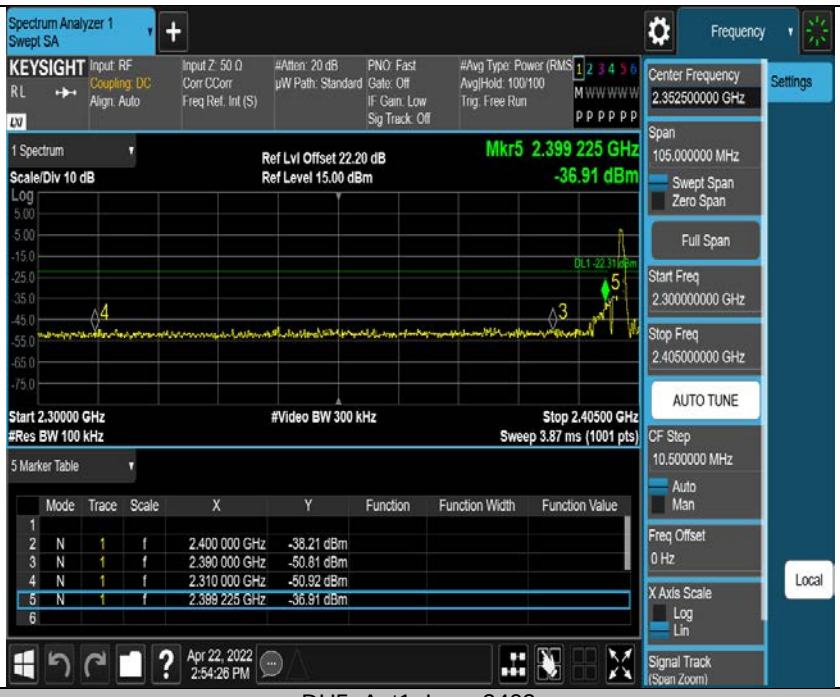

DH5_Ant1_Low_2402

DH5_Ant1_High_2480

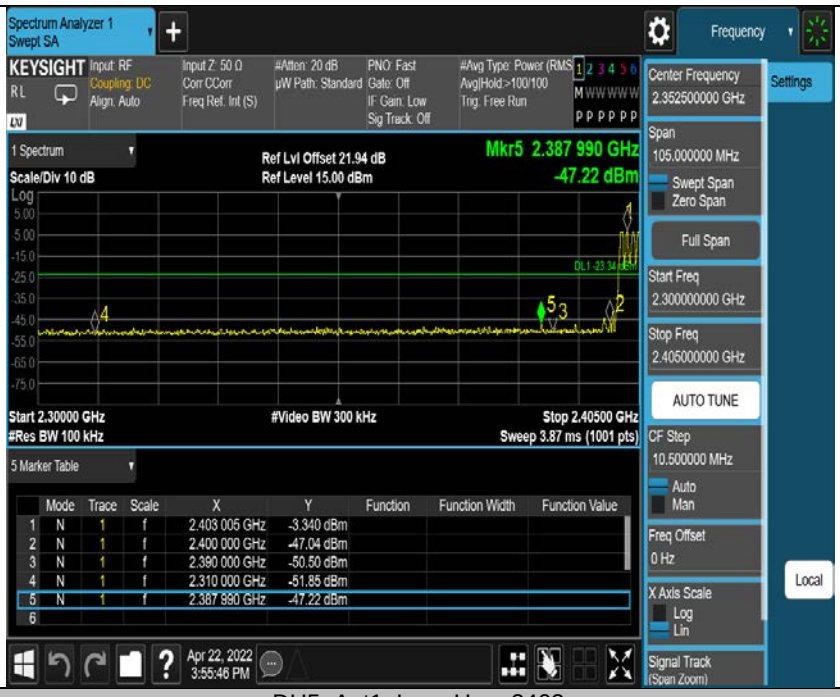

DH5_Ant1_Low_Hop_2402

DH5_Ant1_High_Hop_2480

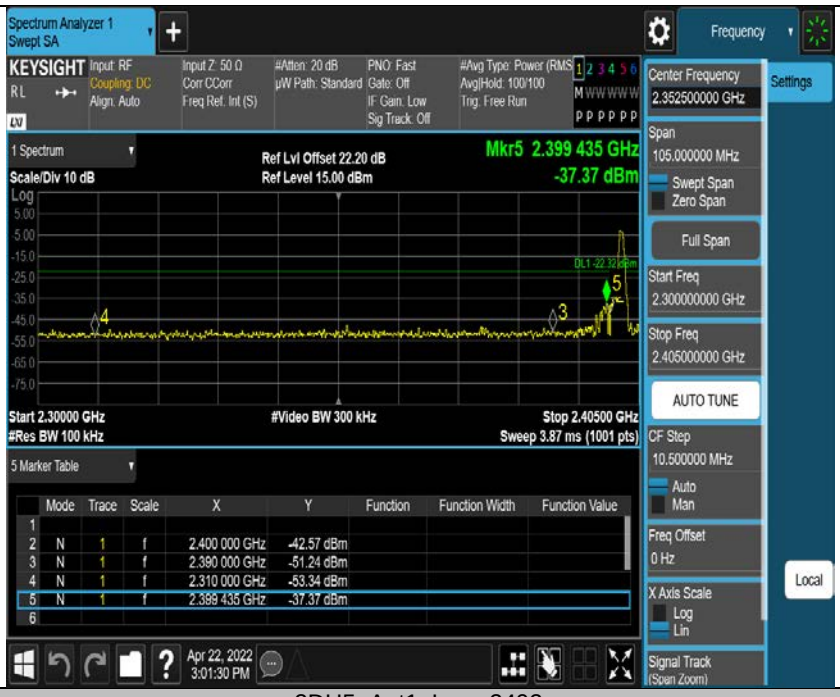

2DH5_Ant1_Low_2402

2DH5_Ant1_High_2480

3DH5_Ant1_Low_2402

3DH5_Ant1_High_2480

TestMode	Antenna	Freq(MHz)	FreqRange [MHz]	RefLevel [dBm]	Result [dBm]	Limit [dBm]	Verdict
DH5	Ant1	2402	30~1000	-2.31	-48.83	≤-22.31	PASS
			1000~26500	-2.31	-39.71	≤-22.31	PASS
		2441	30~1000	-1.99	-49.1	≤-21.99	PASS
			1000~26500	-1.99	-40.12	≤-21.99	PASS
		2480	30~1000	-1.28	-49.73	≤-21.28	PASS
			1000~26500	-1.28	-39.86	≤-21.28	PASS
2DH5	Ant1	2402	30~1000	-2.32	-49.36	≤-22.32	PASS
			1000~26500	-2.32	-39.09	≤-22.32	PASS
		2441	30~1000	-1.82	-48.67	≤-21.82	PASS
			1000~26500	-1.82	-39.74	≤-21.82	PASS
		2480	30~1000	-1.33	-48.9	≤-21.33	PASS
			1000~26500	-1.33	-38.7	≤-21.33	PASS
3DH5	Ant1	2402	30~1000	-2.19	-48.31	≤-22.19	PASS
			1000~26500	-2.19	-39.26	≤-22.19	PASS
		2441	30~1000	-1.78	-48.42	≤-21.78	PASS
			1000~26500	-1.78	-39.52	≤-21.78	PASS
		2480	30~1000	-1.24	-48.44	≤-21.24	PASS
			1000~26500	-1.24	-37.09	≤-21.24	PASS

DH5_Ant1_2402_30~1000

DH5_Ant1_2402_1000~26500

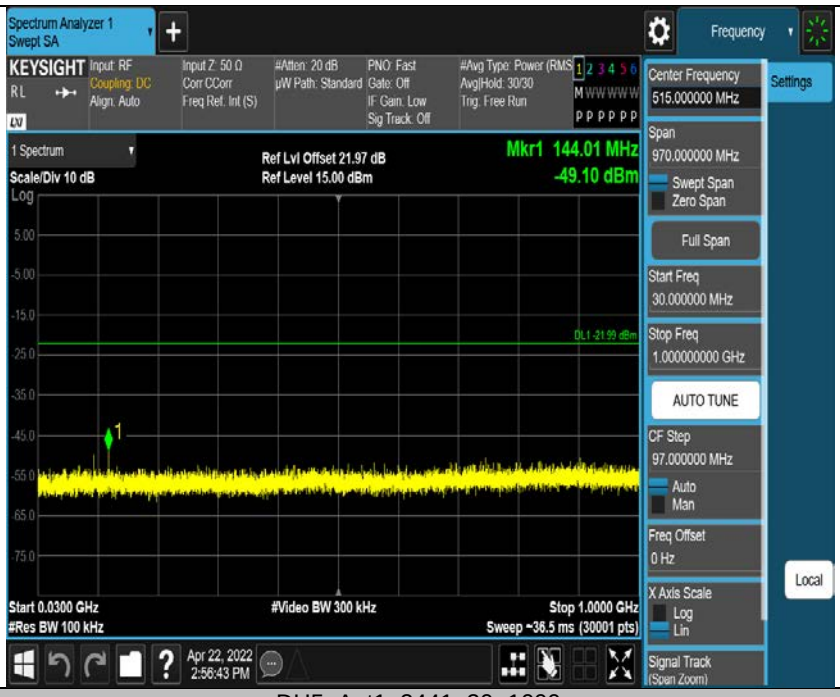

DH5_Ant1_2441_30~1000

DH5_Ant1_2441_1000~26500