Foot Switch FS3

Product Name:FS3
Model Name:FS3

The Foot Switch FS3 is an ergonomically designed modular system, developed for use together with LINAK control boxes and IC actuators with Intelligent Control. The LINAK® Foot Switch is designed for easy and improved control of e.g. hospital beds and couches and has been developed in cooperation with end users. The Foot Switch is therefore very user- and cleaning-friendly and has an aesthetic design.

The FS3 is a robust foot control which is available both as a single and double version as well as a floor and bed model. When mounting the double version on a bed, the Foot Switch will be placed on each side of the bed frame to enable easy operation from both sides. It is also possible to have the double floor version for medical applications, e.g. couches, in order to achieve the opportunity to control different motions of the application. The FS3 is furthermore available in an analogue version, *an OpenBus™ and a wireless version (floor only).*

List of contents	Page no.
Features / Options / Usage	2
Technical Specification	2
Dimension drawings / Dimension for floor model	3-4
Dimension for bed model	3
Dimension for 2 function Foot Switch	4
Ordering example	5
Functionality overview analogue	6
Functionality overview OpenBus™ and wireless	7
Combination possibilities	8
Mounting	10

Information also in data sheet
Information also in user manual

Features & Options:

Pedals colour:	Dark grey RAL7016
Bottom housing colour:	Light grey RAL 7035
Protection class:	IPX6 (or IPX6 Washable DURA™ for beds model only)
Number of functions:	1 or 2 functions
Cable:	Straight 1000 mm and 2000 mm, coiled 600 mm
Button type:	Easy touch tactile switches
Design:	Ergonomic design in the butterfly shape
Mounting:	Floor model or mounted on the side of the bed frame
Wireless:	*Wireless operation together with CA/CO/LIFT with BLE - floor model only*

Usage:

Usage temperature:	+ 5° C to + 40° C
Storage temperature:	-10° C to + 50° C
Relative humidity:	20% to 80% - non-condensing
Atmospheric pressure:	700 to 1060 hPa
Height above sea level:	Max. 3000 meters
Compatibility:	Compatible with LINAK analogue and OpenBus™ control boxes. Please contact LINAK. See sales backup Chapter 3 - Compatibility.
Approvals:	***Safety*** IEC60601-1 ANSI/AAMI ES60601-1 CAN/CSA-22.2 No. 60601-1 ***Radio*** *RED* *FCC (US)* *IC (Canada)* *Telec (Japan)* ***Battery*** *IEC 62133* *UL 205* *UN 38.8*

Important information

LINAK® products, within the scope of this manual, are not classified as medical electrical equipment or systems, nor do they fall within the scope of the EU Medical Device Directive/Regulation or other similar national regulations. The products are components to be built into a piece of medical electrical equipment by a manufacturer.

To support the assessment and certification task of the complete medical electrical equipment or system worldwide, LINAK provides certification, on a component level, according to the IEC 60601-1, (Medical electrical equipment – Part 1: General requirements for basic safety and essential performance) as IEC-certificate and listed as recognised components by NRTL (Nationally Recognized Testing Laboratories).

Description of the various signs used in this manual:

Warning
Failure to comply with these instructions may result in accidents involving serious personal injury.

Recommendation
Failing to follow these instructions can result in product damage.

Please read the following safety information carefully:
It is important for everyone who is to connect, install or use the systems to have the necessary information and access to this User Manual.

Please be aware that LINAK has taken precautions to ensure the safety of the actuator system. The manufacturer/OEM is responsible for the overall approval of the complete application.

LINAK recommends to use the actuators in push applications rather than pull applications.

LINAK actuators are **not** to be used for repeated dynamic push-to-pull movements.

For general pull applications or repeated dynamic push-to-pull movements in the application, please contact LINAK A/S if in doubt.

LINAK® actuators and electronics generally fall outside the IEC 60601-1 definition of applied parts and are not marked as such.

However, assessing the risk whether actuators and electronics can unintentionally come into contact with the patient, determines that they are subject to the requirements for applied parts. All the relevant requirements and tests of the standard are carried out as part of the IEC CB-Scheme assessment.

RF transmitter properties:
Some LINAK products emit RF-power by intention for communication purposes.
Frequency band of transmission: 2402 MHz - 2480 MHz
Type: BLUETOOTH Low Energy BLE 4.2
Modulation: GFSK
Maximum Effective Radiated Power (ERP): 10 dBm

FCC and IC Statements
For RF-emitting products (e.g. BLUETOOTH®, Wi-Fi) intended to be used on the North American continent, the following applies:

FCC statement

NOTE: This equipment has been tested and found to comply with the limits for a Class B digital device, pursuant to part 15 of the FCC Rules. These limits are designed to provide reasonable protection against harmful interference in a residential installation. This equipment generates uses and can radiate radio frequency energy and, if not installed and used in accordance with the instructions, may cause harmful interference to radio communications. However, there is no guarantee that interference will not occur in a particular installation. If this equipment does cause harmful interference to radio or television reception, which can be determined by turning the equipment off and on, the user is encouraged to try to correct the interference by one or more of the following measures:

- Reorient or relocate the receiving antenna.
- Increase the separation between the equipment and receiver.
- Connect the equipment into an outlet on a circuit different from that to which the receiver is connected.
- Consult the dealer or an experienced radio/TV technician for help

Changes or modifications not expressly approved by the party responsible for compliance could void the user's authority to operate the equipment.

This device complies with Part 15 of the FCC Rules. Operation is subject to the following two conditions:
(1) this device may not cause harmful interference, and
(2) this device must accept any interference received, including interference that may cause undesired operation.

IC statement

This device contains licence-exempt transmitter(s)/receiver(s) that comply with Innovation, Science and Economic Development Canada's licence-exempt RSS(s). Operation is subject to the following two conditions:

(1) This device may not cause interference.
(2) This device must accept any interference, including interference that may cause undesired operation of the device.

L'émetteur/récepteur exempt de licence contenu dans le présent appareil est conforme aux CNR d'Innovation, Sciences et Développement économique Canada applicables aux appareils radio exempts de licence. L'exploitation est autorisée aux deux conditions suivantes :

(1) L' appareil ne doit pas produire de brouillage;
(2) L' appareil doit accepter tout brouillage radioélectrique subi, même si le brouillage est susceptible d' en compromettre le fonctionnement.

Dimensions drawings

Dimension for 1 channel floor model

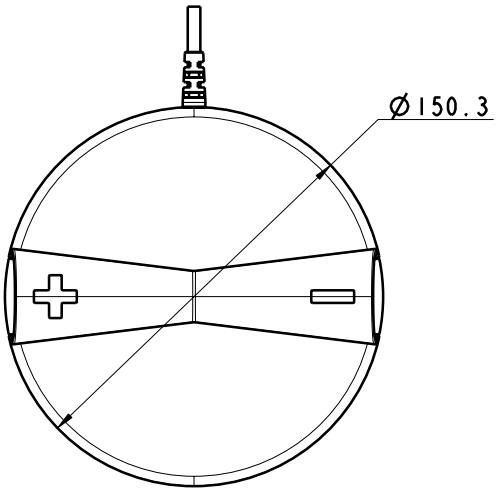

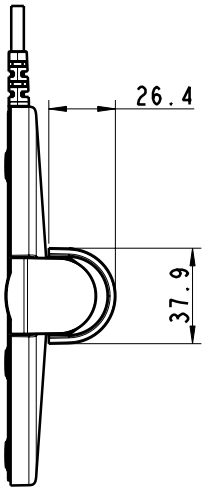

Possible cable dimension and plug type see page 8.

Dimension for 1 channel bed model

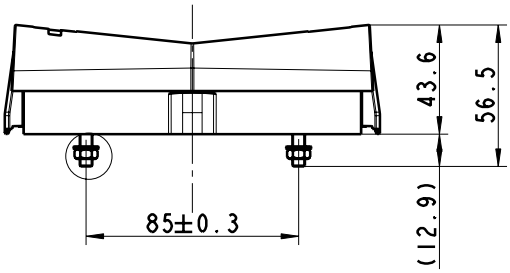

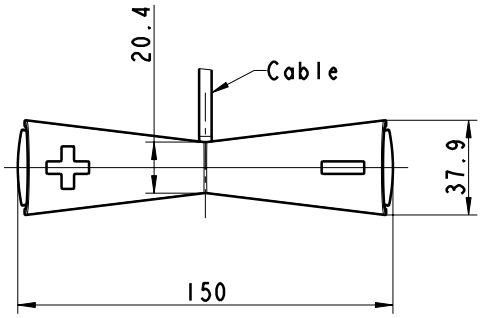

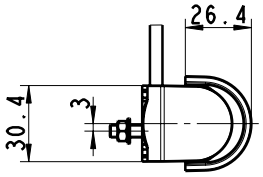

Possible cable dimension and plug type see page 8.

Dimension for 2 channel floor model

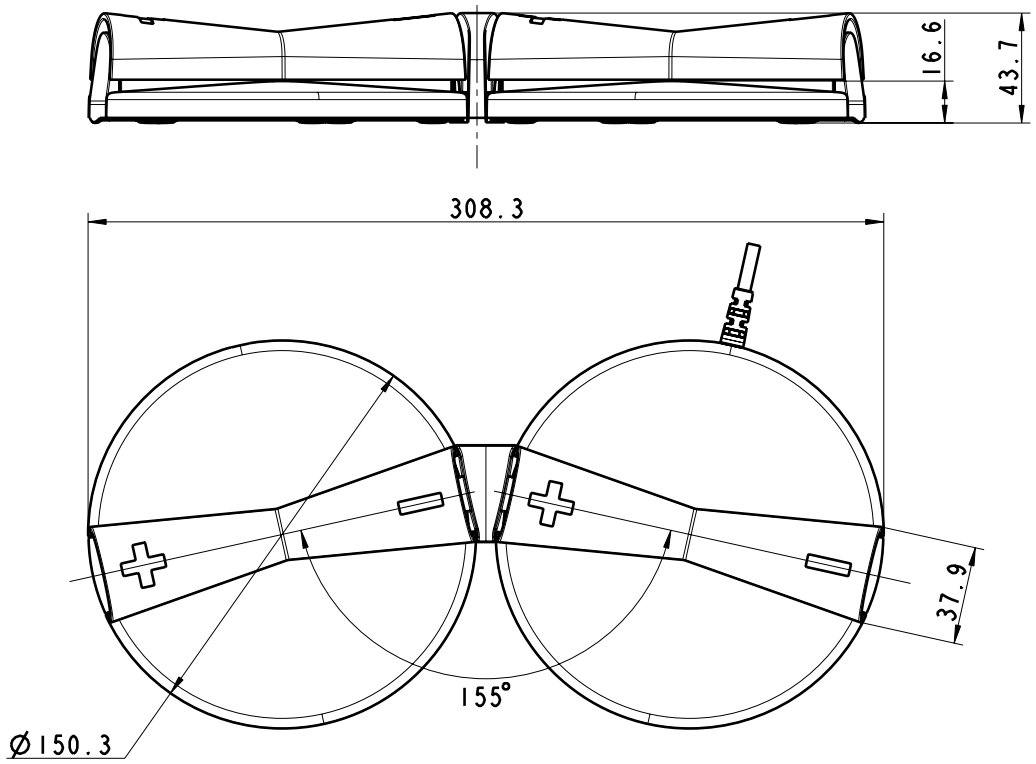

Possible cable dimension and plug type see page 8.

Dimension for 2 channel bed model with cable (analogue and OpenBus versions)

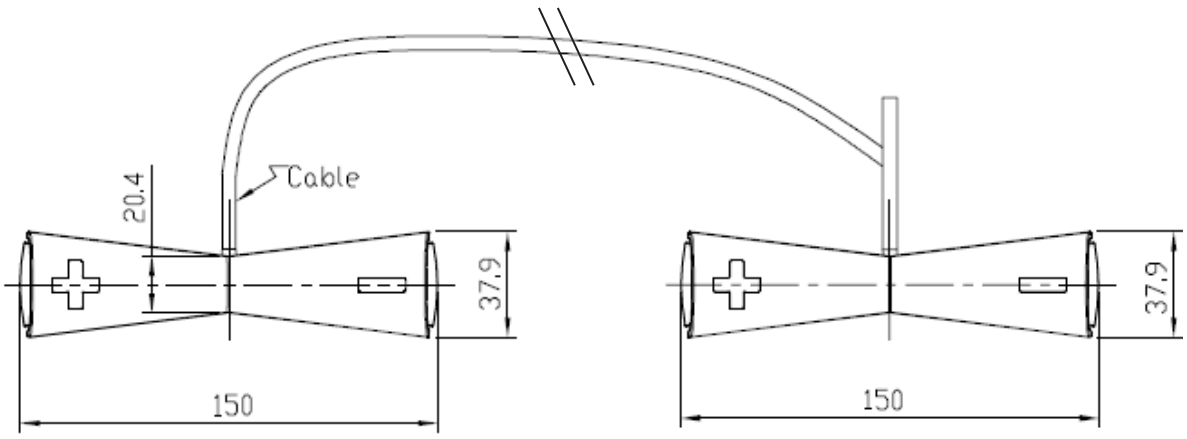

Possible cable dimension and plug type see page 8.

Foot Switch FS3 E-con ordering example:

F S 3 2 0 1 2 000 0 0 0 6 - G 0 0 0 0 0 0 0 0 D 0 1 0 0 0

Not used	**0** = None
Not used	**0** = None
Not used	**0** = None
FS3 Cable length:	**0** = No cable (For wireless version only) **1** = Straight 2000mm **2** = Straight 1000mm **3** = Coil 600mm (Only for OB variants) **X** = Special
FS3 Cable Matr.	**0** = None cable (For wireless version only) **1** = PU
FS3 cable Plug Type	**D** = DIN (CB8/9/12/14/140/CBJC/CBJ1/CBJ2) **M** = Modular (CB6/CB16/CB20/CB6S/43IC/44IC) **N** = No plug, wireless (CA63 & CO71)
FS3 Cable Colour	**0** = Grey RAL7035 **1** = None cable (For wireless version only)
Not used	**0** = None
Interconnection cable	**0** = None **1** = 1400 mm (only for bed adapter)
Not used	**0** = None
Not used	**0** = None
Not used	**0** = None
Foot pedal handle colour	**0** = Dark grey RAL7016 **S** = Special
Mounting	**0** = No screw (floor adapter single and double) **1** = Screw mounting (bed adapter single and double) **2** = No screw (Wireless floor adapter single and double)
Box Colour	**G** = Grey RAL7035
	- = None
IP-Degree:	**6** = IPX6 (floor version and wireless floor version) **W** = IPX6 Washable DURA™ (bed version only)
Not used	**0** = None
Not used	**0** = None
Not used	**0** = None
Not used	**000** = None
Functionality Right pedal (Right/Double pedal)	**0** = Only for OpenBus™ See functionality overview **1** = See functionality overview **2** = See functionality overview **3** = Not for OpenBus™ See functionality overview **4** = Not for OpenBus™ See functionality overview **5** = See functionality overview wireless
Functionality Left pedal (Left/Single pedal)	**S** = Single Pedal **0** = Only for OpenBus™ See functionality overview **1** = See functionality overview **2** = See functionality overview **3** = Not for OpenBus™ See functionality overview **4** = Not for OpenBus™ See functionality overview **5** = See functionality overview wireless
Functionality Type	**0** = Analogue (CB6 like control box, common positive) **H** = Analogue (Common Ground,CB9 like control box must choose this bit) **V** = Openbus™ **A** = Wireless SW1 **B** = Wireless SW2 **C** = Wireless SW3
FS3 Type	**0** = Bed adapter(Single) **1** = Floor adapter (Single) **2** = Floor adapter (Double) **3** = Bed adapter (Double) **4** = Floor Wireless(Single) **5** = Floor Wireless (Double)
Controls Type	**S3** = FS3
Controls	**F** = Foot switch

See combination possibilities on page 8.

Functionality

Functionality overview analogue:

	Left pedal		Single/Right pedal	
Code nos.	**+**	**-**	**+**	**-**
FS3X**0S1**	N/A	N/A	1UP	1DW
FS3X**0S2**	N/A	N/A	2UP	2DW
FS3X**0S3**	N/A	N/A	3UP	3DW
FS3X**0S4**	N/A	N/A	4UP	4DW
FS3X**012**	1UP	1DW	2UP	2DW
FS3X**013**	1UP	1DW	3UP	3DW
FS3X**014**	1UP	1DW	4UP	4DW
FS3X**021**	2UP	2DW	1UP	1DW
FS3X**023**	2UP	2DW	3UP	3DW
FS3X**024**	2UP	2DW	4UP	4DW
FS3X**031**	3UP	3DW	1UP	1DW
FS3X**032**	3UP	3DW	2UP	2DW
FS3X**034**	3UP	3DW	4UP	4DW
FS3X**041**	4UP	4DW	1UP	1DW
FS3X**042**	4UP	4DW	2UP	2DW
FS3X**043**	4UP	4DW	3UP	3DW
FS3X**011**	1UP	1DW	1UP	1DW
FS3X**022**	2UP	2DW	2UP	2DW
FS3X**033**	3UP	3DW	3UP	3DW
FS3X**044**	4UP	4DW	4UP	4DW

Functionality overview OpenBus™

	Left pedal		Single/Right pedal	
Code nos.	**+**	**-**	**+**	**-**
FS3XVS0	N/A	N/A	H0	H1
FS3XVS1	N/A	N/A	H10	H11
FS3XVS2	N/A	N/A	H20	H21
FS3XV00	H0	H1	H2	H3
FS3XV11	H10	H11	H12	H13
FS3XV22	H20	H21	H22	H23
FS3XV01	H0	H1	H0	H1
FS3XV10	H10	H11	H10	H11
FS3XV20	H20	H21	H20	H21

Functionality overview Wireless

	2nd pedal		*Single pedal*	
Code nos.	*+*	*-*	*+*	*-*
FS3 analogue	*2U*	*2D*	*1U*	*1D*
FS34AS5	*N/A*	*N/A*	*I0*	*I1*
FS34BS5	*N/A*	*N/A*	*I10*	*I11*
FS34CS5	*N/A*	*N/A*	*I20*	*I21*
FS35A55	*I2*	*I3*	*I0*	*I1*
FS35B55	*I12*	*I13*	*I10*	*I11*
FS35C55	*I22*	*I23*	*I20*	*I21*
FS36A55	*I2*	*I3*	*I0*	*I1*
FS36B55	*I12*	*I13*	*I10*	*I11*
FS36C55	*I22*	*I23*	*I20*	*I21*

The same software is used in both pedal 1 and 2 setups. The single pedal is always the BLE master with software. The 2nd pedal is a standard FS3 driven by a single pedal.

Combination possibilities

	FS3 Floor version 1 ch		FS3 Floor version 2 ch		FS3 Bed version 1 ch		FS3 Bed version 2 ch		*FS3 Wireless*
	Analogue	**OpenBus**	**Analogue**	**OpenBus**	**Analogue**	**OpenBus**	**Analogue**	**OpenBus**	***Bluetooth®***
CB	CB6, CB8, CB9, CB12, CB140, CA30, CA40	CB6S, CB16, CB20	CB6, CB8, CB9, CB12, CB140, CA30, CA40	CB6S, CB16, CB20	CB6, CB8, CB9, CB12, CB140, CA30, CA40	CB6S, CB16, CB20	CB6, CB8, CB9, CB12, CB140, CA30, CA40	CB6S, CB16, CB20	***CA63, CO71, LIFT40, LIFT50***
Cable type	Cable straight 2000	Cable straight 1000, 2000, cable coiled 600	Cable straight 2000	Cable straight 1000, 2000, cable coiled 600	Cable straight 2000	Cable straight 1000, 2000	Cable straight 2000, intercon-nection 1400*	Cable straight 2000, intercon-nection 1400*	***N/A***
Plug type	RJ45 (only CB6, CA30, CA40), DIN plug	RJ45 OpenBus	RJ45 (only CB6, CA30, CA40), DIN plug	RJ45 OpenBus	RJ45 (only CB6, CA30, CA40), DIN plug	RJ45 OpenBus	RJ45 (only CB6, CA30, CA40), DIN plug	RJ45 OpenBus	***N/A***
CBJH					Plug type: RJ45 Cable: straight 2000				***N/A***
CBJ1, CBJ2, CBJC					Plug type: DIN plug Cable: straight 2000				***N/A***
CBJC					Plug type: DIN plug Cable: straight 2000				***N/A***

*Cable material is PVC which is sufficient for a cable mounted between two foot switches with fixed mounting in an application.
It is in accordance with LINAK cable guidances.

USPs and KSFs:

Specification	USPs (towards OEM):	KSFs (towards end users):
User-friendly interface design	Aesthetic design that improves user experience	Simple to use, not confusing. Aesthetic design
Good cover quality, easy to wipe dust	Cleaning-friendly	Easy to clean for bacteria and dust
Available for one or two functions	Flexibility	Increased flexibility, eases the daily life
Pleasant sound when pedal activated	Pleasant sound when activated	Feels good when activated
Robust	Fewer quality problems due to robust and well-tested product	High satisfaction with the equipment
FS3 Wireless		
Cable management	*No cables mean easy to integrate into design = better design = sales argument*	*Better cable management = no cable to mount*
Wireless	*No need for MJ[illegible] using multiple controls*	*Simple design/less components/no tripping over cables*
Reliability	*Satisfied customers*	*No pinched or cut cables*
Improved cleanability	*Improved hygiene*	*No cable means improved cleanability*

Mounting of the FS3 bed model:

To mount the FS3 bed model, you have to use the bolt and the nut which have already been fitted to the FS3 bed model (see picture below).

Bolt and nut for mounting

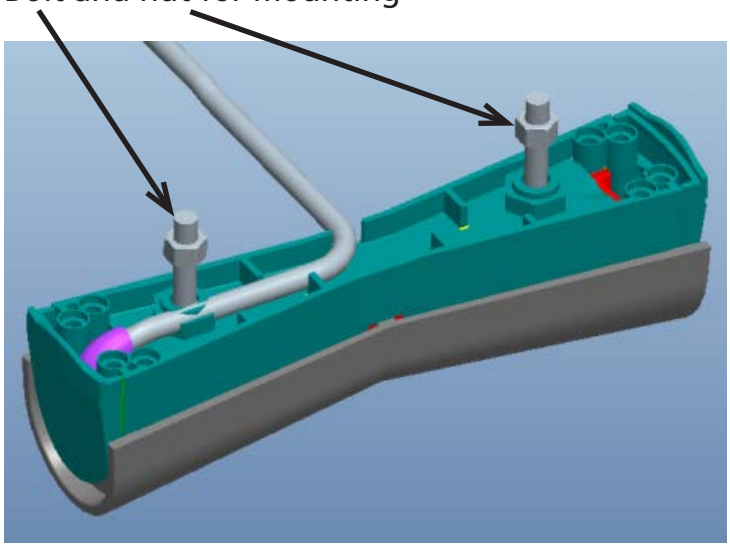

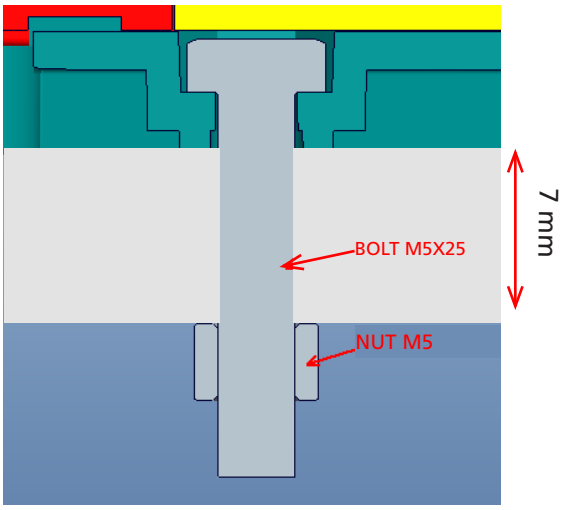

You have to remove the nut before mounting the FS3 on the bed and after mounting the FS3to the bed, the nut is fastened to secure that the FS3 is fixed to the bed frame.

Please note that the max. torque on the nut should be 2.0 Nm (20kgf. cm)

When mounting the FS3 bed model, it is important to run the cable through the hole of the FS3 in order to lead the cable through (see picture below).

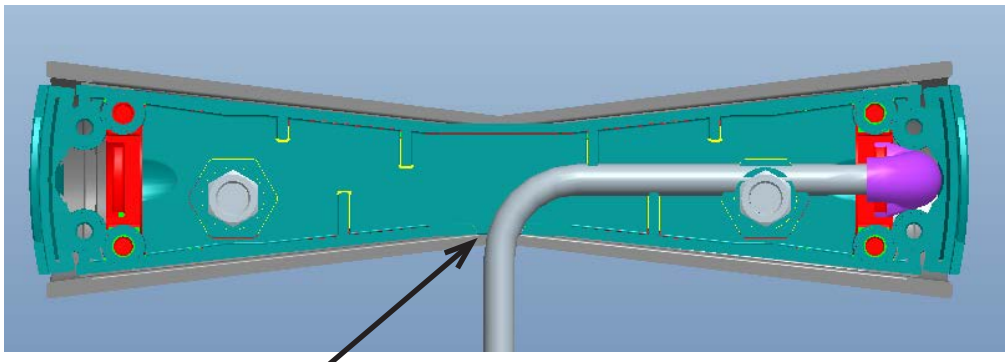

Location of the notch for the cable of the FS3 bed model.

LED functionality:

Function	*LED behaviour (FS3)*	*LED behaviour (CB)*
Enter pairing mode	*LED flashes green*	*LED solid green*
Locating control box	*LED flashes green* *Closer = faster flashing*	*LED flashes green and yellow and buzzer is ON, same speed as FS3. The closer to the control box, the faster the flash. When the buzzer and the LEDs have the same sound and visual frequency, FS3 and CB are ready for pairing.*
Pair	*2 long LED flashes*	*Buzzer and LED confirmation with 2 long flashes and 2 long buzzer sounds.*
If more control boxes	*LED flashes*	*The nearest control box will increase in sound and is paired to the foot switch.*

Recommendations:

- Do not pull the cable or drop the FS3 on the floor.
- Do not play with the FS3.
- *Do not submerge the foot switch into water.*
- *Unless otherwise specified or agreed with LINAK, the foot switch is only intended to be used for LINAK systems.*
- *It is recommended to check the foot control for damage and holes caused by violent handling before washing the application or at least once a year.*
- *Always perform the pairing of foot switch and control box in close proximity to the application. Also ensure that the pairing has been made with the correct application by operating the application after ended pairing.*
- *When intending to operate an application with LINAK Bluetooth® Low Energy, please ensure that the correct BLE foot switch is used. Otherwise, there is a risk of unintended movement of the application that has been paired with the BLE foot switch.*

Warnings

Wireless risks and recommendations

Due to some customer concerns regarding the BLE range, LINAK decided to set the RF sensitivity and the transmitting power settings to a maximum. In addition, LINAK standard BLE allows pairing all the time.

Risk 1

If a BLE foot switch is to be paired with an application, this can be done without being next to the application as the transmitting power settings have been set to a maximum. Under such circumstances, there is a risk of pairing with another application from the distance. As a rule, a BLE foot switch is paired with the closest detectable BLE device, however, the BLE device is not always physically closest.

Risk 1 - remedy

The pairing procedure must always be made in near proximity to the application. It must also be ensured that the pairing has been made with the correct application by simply operating the application after ended pairing.

Risk 2

If a building is equipped with several LINAK BLE applications and the BLE foot switch is accidentally swapped, there is a risk of operating another BLE application if within range. This can cause unintended movement and consequently influence patients' health.

Risk 1 - remedy

When intending to operate an application with LINAK BLE, it must be ensured that the correct BLE foot switch is used. Otherwise, there is a risk of unintended movement of the application that has been paired with the BLE foot switch.

Batteries

What batteries to use

The FS3 Wireless must be equipped with two pieces AAA batteries. Due to the availability of AAA batteries, we recommend that you buy the batteries locally. If you prefer to buy from LINAK A/S, the LINAK part number is: 0063010.

How to mount batteries correctly

1. Underneath the FS3 Wireless. Remove Phillips screws and remove battery cover.
2. Place batteries correctly to ensure the electrical polarity and place battery cover again.

1.

2.

Low battery indication

Depending on usage, the lifetime is estimated to 3-4 years.

Batteries must be replaced when:

The FS3 Wireless foot switch is activated and the battery voltage = < 2.4 V. The LED will flash with 250 m/s ON/OFF 4 times and then turn off.

FS3 Wireless pairing:

	Open the battery cover on the back of FS3. Place batteries and move within 2 meters of the control box.
	Activate Direct Pairing by pressing the button under the battery cover for 3 seconds. Buzzer and LED are now activated.
	Move the foot switch within 10 cm of the control box until the buzzer frequency changes from slow to fast.
	Confirm pairing by pressing the button under the battery cover. A double confirmation beep means that pairing is OK.