User Manual

Copyright ⓒ 2020. Lab-T, Inc.

Smart Automatic Cat Litter Box

LavvieBot S

User Manual

Table of Contents

p.2	LavvieBot Authenticity Check and Customer Service Contacts
p.2	LavvieBot Specification
p.3-4	Components
p.5-7	Safety Instructions
p.8-9	Start your LavvieBot Life
p.10	LavvieBot Process
p.10	Acclimating Your Cat
p.11-12	Indicator Lights and Button Functions
p.13	Smartphone Connection
p.14	How to Refill Litter
p.15-16	Cleaning LavvieBot
p.17-18	FAQs
p.19	Money Back Guarantee and Warranty
p.20	Precautions

LavvieBot Authenticity Check and Customer Service Contacts

1. Every LavvieBot has a sticker marked with its own product number to guarantee authenticity. To check the authenticity of your product, please download the PurrSong mobile application and enter the product number as indicated on the sticker.
   PurrSong, Inc. shall not be liable for problems related to the use of an unauthorized product and its warranty.

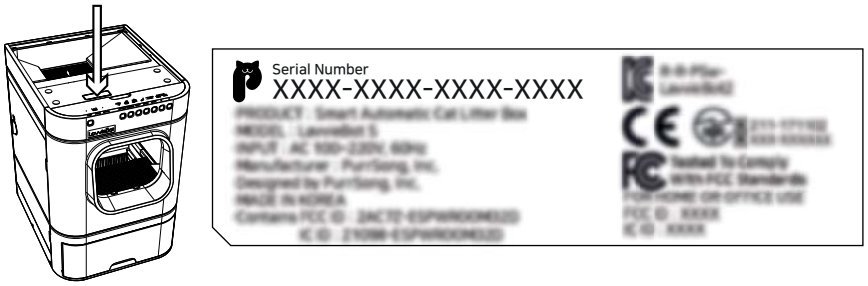

The authenticity sticker indicating the product number is under the top lid of the LavvieBot.

2. Contact our Customer Service team for returns, refunds, and warranty information.

LavvieBot Specification

Model: LavvieBot S
Country of Origin: Republic of Korea
Date of Manufacture: Indicated separately
Dimensions: 49.5 x 58.2 x 70.4 (cm) / 19.5 x 22.9 x 27.7 (in)
Input: DC 12V ⎓ 5A
Power consumption: 18W
Package includes: LavvieBot S, Power adapter, User manual, Waste bags, Deodorizer
Manufacturer : PurrSong, Inc.
Designed by PurrSong, Inc.

Components

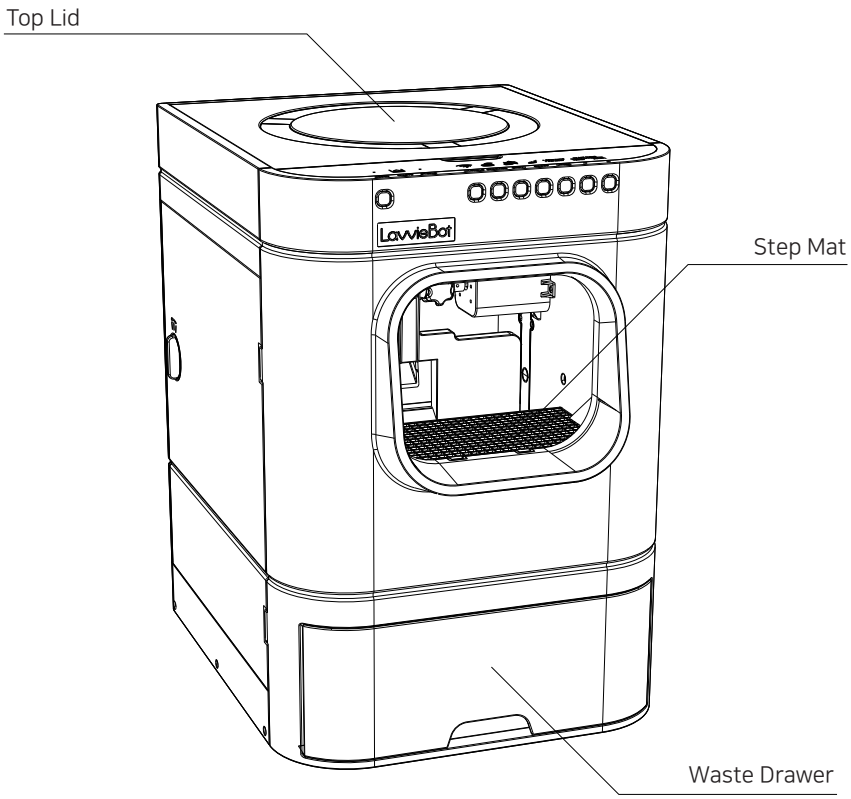

Components

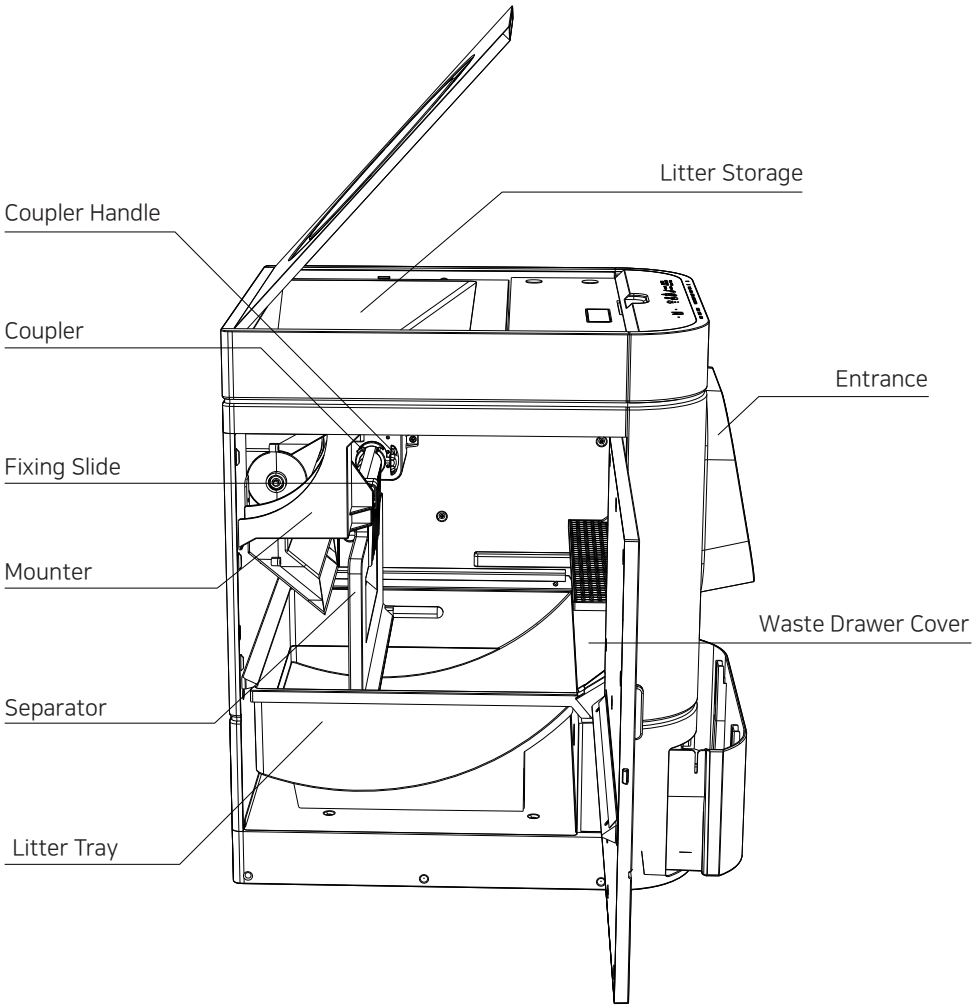
Coupler Handle
Coupler
Fixing Slide
Mounter
Separator
Litter Tray
Litter Storage
Entrance
Waste Drawer Cover

Safety Instructions

Make sure your cat is not in the LavvieBot when operating. Any LavvieBot operation with your cat inside can cause serious safety hazards.

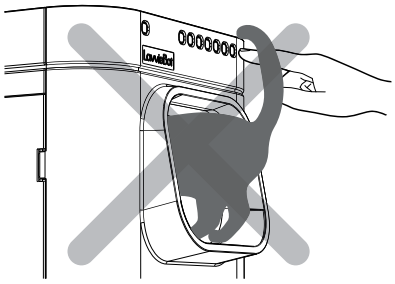

LavvieBot is designed to use only clumping litter of medium-sized particles. Using a weak clumping cheap litter or a natural litter with long or excessively big particles can damage the machine and shorten its lifespan.

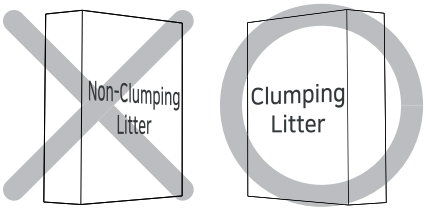

ex) Pellets, Silica gel, etc

ex) Bentonite, Natural litters

Push and engage the litter tray fully into its location to avoid malfunction or any damage to LavvieBot.

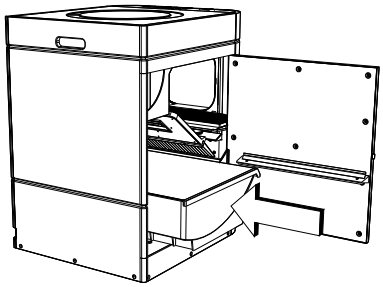

Check regularly if the litter level is filled enough in the litter tray. If it is less or more than the baseline, it may cause operational failure. When adding litter manually, fill the tray with the litter until it meets the line and spread flat.

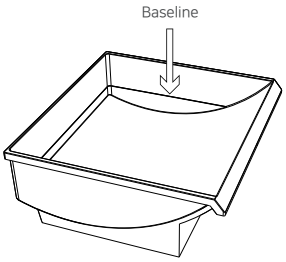

The LavvieBot should be placed on a firm, level floor. Placing the LavvieBot on uneven or unstable surfaces can result in malfunction or damage to the machine.

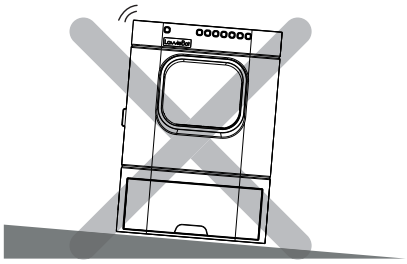

Handle the LavvieBot with care. Cleaning the product with water is prohibited as the machine consists of metal as well as plastic and includes electronic components.

Safety Instructions

Refer to p.15-16 for information for cleaning LavvieBot. Cleaning the product with scouring pads or abrasive chemicals can cause damage to the product.

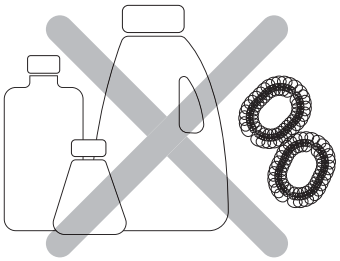

Small clumps that cannot be sifted by the rake may be left out in the litter. Clean the LavvieBot regularly for your cat's health and a hygienic environment. Please clean the litter tray once a month to avoid motor overload problem.

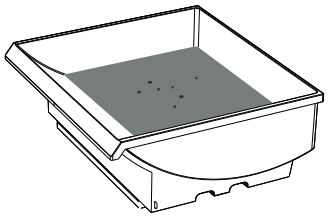

Safety sensors are located at the entrance. Always keep the side door closed, except when cleaning. Leaving the door open or opening it while the LavvieBot operates can lead to serious safety consequences.

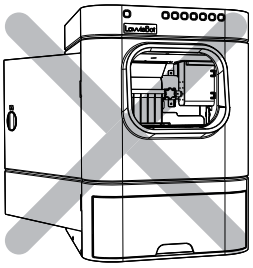

Do not put pressure on the LavvieBot by placing heavy objects on top of the machine or applying excessive force to the buttons, which can result in damage.

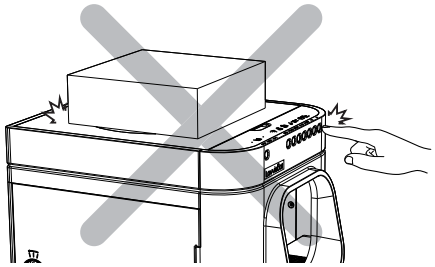

We recommend one or two cats for one LavvieBot. In the case of having more than two cats use one LavvieBot, the life and performance of the LavvieBot cannot be guaranteed.

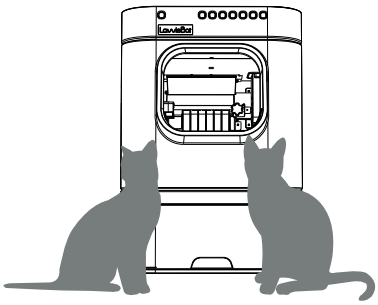

The use of LavvieBot requires supervision. It is not intended for use by persons who have a restricted physical, sensory or mental capacity, or persons lacking experience or knowledge unless they are supervised.

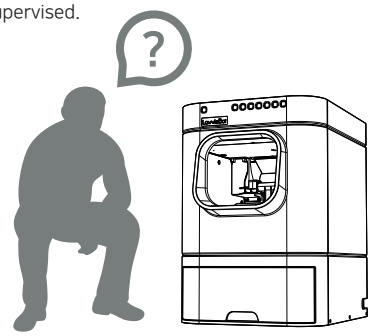

Safety Instructions

Never let an infant or a baby go inside the LavvieBot.

Do not try drying out the machine using a hairdryer and putting a candle inside to remove bad odors. These attempts can cause electric shock or a fire, or damage the product.

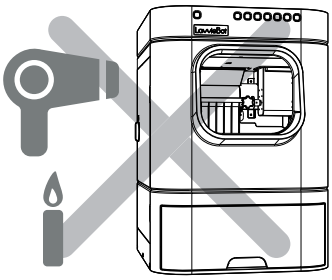

If a product error or failure occurs, do not repair the machine yourself. Contact our Customer Service for repair.

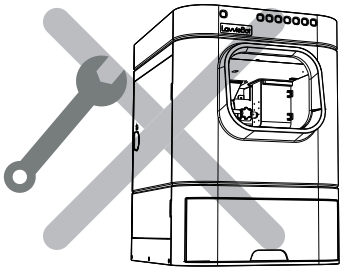

LavvieBot and its accessories are designed to be used indoors. Please place the machine where the temperature is between -10℃ and 50℃. If the temperature is below or above the range, the performance of the LavvieBot cannot be guaranteed.

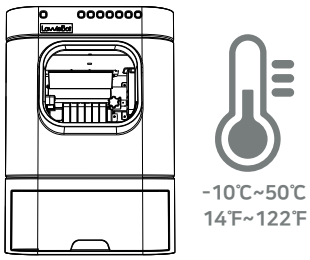

LavvieBot is equipped with silicone parts which are made to avoid rust and leaking incidence. Please be cautious as cats may scratch and damage these parts. You may use LavvieBot without the silicone parts; however, for those who want to replace it, contact a customer center and request for silicone service.
* Please note that such service will be charged accordingly.

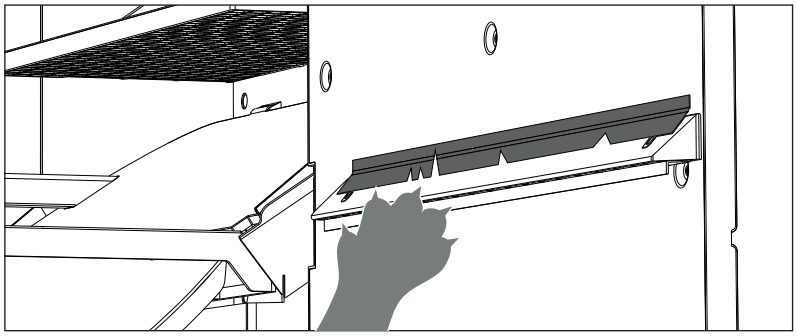

Start your LavvieBot Life

1. Remove packing tapes and package cushioning in and out of LavvieBot.
2. Take out the accessory box and a step mat from the waste drawer. Attach the step mat as shown in the picture below.

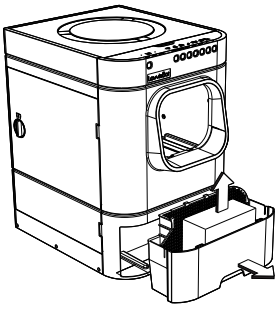

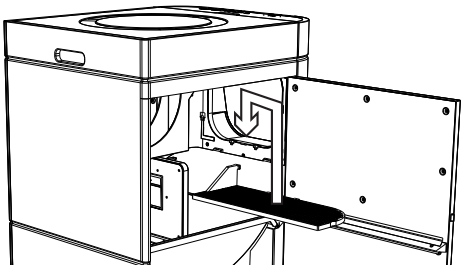

Accessories

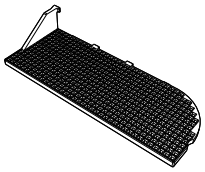

Step Mat

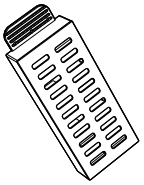

Deodorizer

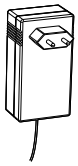

Power adapter

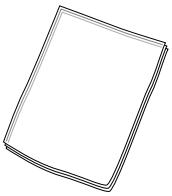

Waste bags

3. Connect the deodorizers and install this set inside the machine.

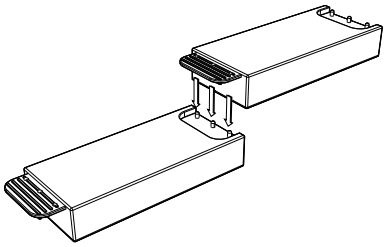

❶ Connect each end of a deodorizer as shown above

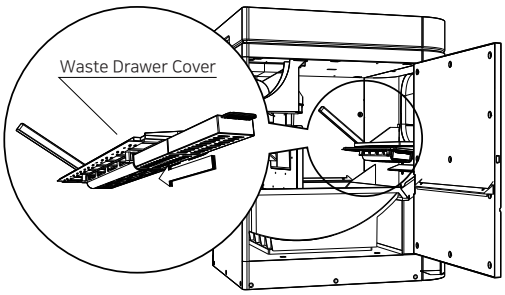

❷ Install the deodorizer underneath the waste drawer cover

Start your LavvieBot Life

4. Place the LavvieBot on a firm, level surface and plug in.

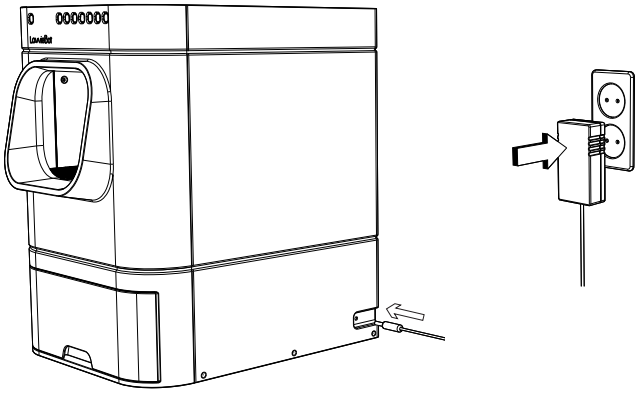

5. Open the top lid and fill the litter storage (maximum 6.5L).
· The maximum amount is measured based on general clumping litters such as Bentonite. In the case of using natural litters, set the type of litter and standard amount after filling the storage by pressing the LITTER button. (See p.11-12 for Indicator Lights and Button Functions and p.14 for How to Refill Litter)

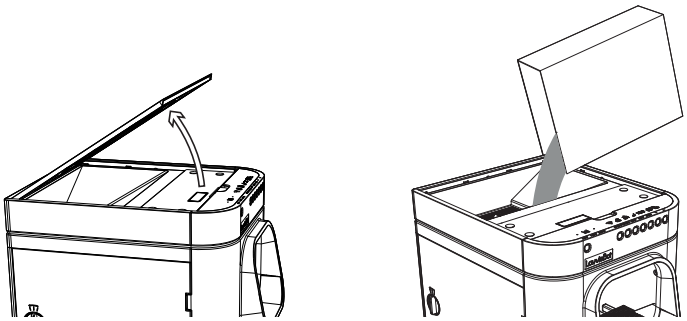

6. Press the STORAGE button to add litter to the litter tray.
· Initial setting is set to approximately 4kg of bentonite litter type.

7. LavvieBot is now ready for use.
· When your cat uses the LavvieBot and leaves, the machine will automatically clean the waste from the litter tray. Then, empty the waste drawer when it is full.

LavvieBot Process

LavvieBot is always monitoring the litter tray.

1) For safety reasons, LavvieBot completely stops auto-cleaning when a cat enters LavvieBot. It also controls its operation when a cat or person is detected in and around the litter tray.

   · Check the STATUS indicator light (see p.11-12 Indicator Lights and Button Functions).

2) When the level of litter in the litter tray is low, it will automatically add a certain amount of litter from the storage.

   · When the litter is filled, the lamp light is blue; red when the litter is less than half full; red light blinks when it is empty.
   · You can change the set-up amount of litter in the tray (see p.11-12 Indicator Lights and Button Functions).

3) When the set time passes after your cat leaves the litter tray, the separator will sift and separate the solid waste from the tray into the waste drawer.

   ·You can also adjust the Wait Time depending on the type of litter and cat's bowel movement habits. (see p.11-12 Indicator Lights and Button Functions)

All you need to do is making sure that there is a plenty of litter in the litter storage and changing the waste bag (emptying the drawer) when it is full.

LavvieBot is designed to work automatically. However, if you wish to operate it manually, refer to p.11-12 Indicator Lights and Button Functions.

Acclimating Your Cat

1. Place the LavvieBot in the same location where a previous litter box was and allow your cat to have easy access to the new litter box.
2. If your cat is not getting used to the LavvieBot, try putting one or two pieces of the cat's waste into the litter tray. Or you can mix the litter in the tray with a cup of litter from the old litter box.
3. If the cat still does not use LavvieBot, try the following directions;
   1) Open the side door, lift the separator after pressing the SEPARATE button, and remove the litter tray (see p.15).
   2) Let your cat use the litter tray as if it were a usual litter box.
   3) Put the used litter tray back into the machine after about three days.

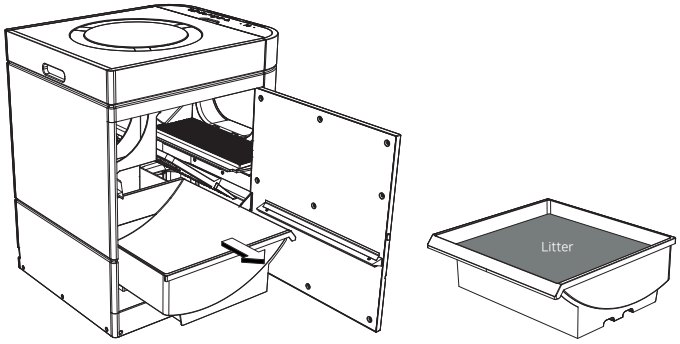

Indicator Lights and Button Functions

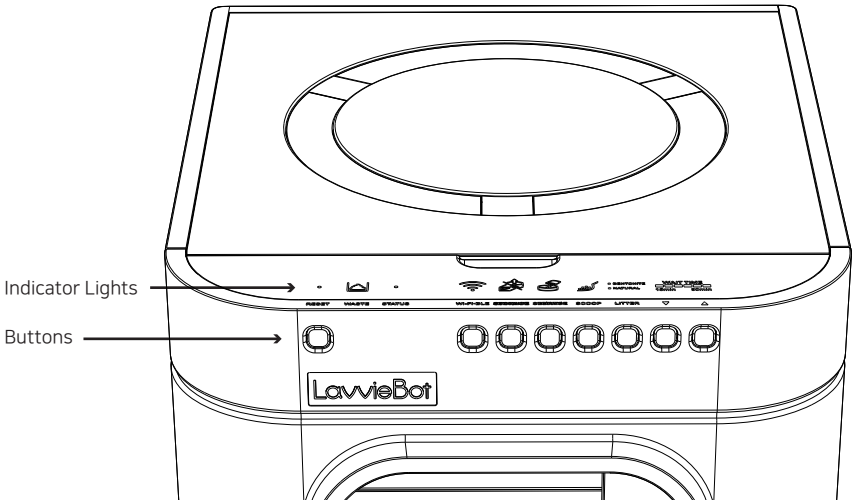

•
RESET

System reset responding to abnormality
· When LavvieBot's operation has a problem, please reset the machine by pressing and holding the RESET button indicator light appears.
(such information as the IP address of a router, etc. will not be reset).

WASTE

Status of waste drawer
· The WASTE indicator light appears when the waste drawer gets full.

•
STATUS

Status of LavvieBot
· The STATUS indicator lights display the status of the machine.

Indicator Lights	Status
Green	Cats or people are near LavvieBot.
Blue	A cat is inside LavvieBot.
Red	Error detected. · Please contact Customer Service team if the error continues after resetting the machine.

WI-FI·BLE

Wi-Fi/BLE light displays the status of connection.
· LavvieBot can be connected to the PurrSong mobile application using Wi-Fi and you can also register and update its firmware via BLE. (available only with 2.4 GHz).

Buttons	Indicator Lights	Status
Press the button	Blue light blinking Steady blue light	Searching for a Wi-Fi network Connected to Wi-Fi
Press and hold the button (more than 2 secs)	Green light blinking Steady green light	Searching for a Wi-Fi network Connected to BLE

Indicator Lights and Button Functions

SEPARATE

Disassemble for cleaning

· The SEPARATE button is used to clean the inside product parts of LavvieBot.
· For Litter Tray SEPARATE Mode - Press the button once and the SEPARATE indicator light will be blue. You can see the separator being lifted toward the entrance. You can only remove the litter tray during this mode.
· For Separator SEPARATE Mode - Press and hold the SEPARATE button more than 2 seconds and the SEPARATE indicator light will be red. Then, the separator will place itself to perpendicular to the ground. Now, simply take out the separator.
· You can stop/cancel by pressing the SEPARATE button one more time.

STORAGE

Status of litter storage / Refill litter

· The STORAGE indicator light displays the status of a litter storage.

Indicator Lights	Status
Steady blue light	The storage is full.
Light off	The storage has not enough litter.
Red light blinking	The storage has no litter.

· The STORAGE button is used to refill the litter.

Buttons	Indicator Lights	Status
Press the button	Blue light blinking	The litter is being refilled. · It will not work if a litter tray has enough litter in it.
Press and hold the button (more than 4 secs)	Blue light blinking	The litter will be refilled while pressing the button. · It will continue to refill until you release the button. (max. 5kg)
Press RESET and STORAGE buttons at once during SEPARATE mode · Refer to p.12 and p.15 for SEPARATE mode	Red light/blue light alternately blinking	It releases all the litter from a litter storage. · Press any button to stop/cancel the process.

SCOOP

Manual scooping

· When pressing the SCOOP button, the indicator light will blink and the separator will start sifting the waste to the waste drawer.
· Press the SCOOP button to begin scooping immediately. Please wait until the clumping gets hard enough so that it won't stick to the separator or create too small clumps to scoop, failing to clean effectively.
· Press the button again to stop the separator during its cleaning process.

• BENTONITE
• NATURAL
LITTER

Litter type

· Choose the type of cat litter that you will use for LavvieBot by pressing the LITTER button once. Choose BENTONITE when you use bentonite cat litter and NATURAL to use one of the natural litters made of tofu, corn or other natural materials.
· Press and hold the button to set a level of the litter in the litter tray, and LavvieBot will keep that set-up amount by refilling litter automatically.

WAIT TIME
10min 60min
▼ ▲

Wait Time Display

· Set the length of wait time by pressing ▼ and ▲ buttons.
The Wait Time is the time between a cat's exit of LavvieBot and beginning of auto-cleaning. We recommend setting 10 minutes when BENTONITE litter is used.

Smartphone Connection

Download the PurrSong mobile application exclusively developed for LavvieBot from Google Play Store or App Store to connect LavvieBot to your mobile device.

1. Sign up.

2. Register your LavvieBot.
   1) After logging in, tap on the main tab bar on the bottom.
   2) Click on "IoT" at the top of the screen and choose Register.
      · Register your LavvieBot after entering your locations by clicking "Location".
   3) Click on "LavvieBot" and enter the product number as indicated on the sticker under the top lid of LavvieBot.
      · Refer to p.2 for LavvieBot Authenticity Check and Customer Service Contacts.
   4) Follow the guide provided by the app to complete the device and location registrations.

3. Register a router.
   1) Choose "Register" from registered LavvieBot.
   2) Follow the guide provided on app to register your router as you did for device registration.
      · LavvieBot supports only 2.4 GHz Wi-Fi networks. (not available in 5G)
   3) Once the router is registered, a blinking green light of Wi-Fi·BLE indicator will turn blue and comes on steady.

4. Update firmware for optimal performance.
   1) Click an update icon on the right side of screen. (The icon will appear only when the firmware is ready for update)
   2) Follow the guide provided by the app to update the firmware as you did for device registration.
      · Be careful not to turn off the phone during the update as this can cause a failure in the system.

5. Register your cat(s).
   1) Choose "Cat" at the top of the screen.
   2) Tap Register to enter the information of your cat(s) and complete the registration.

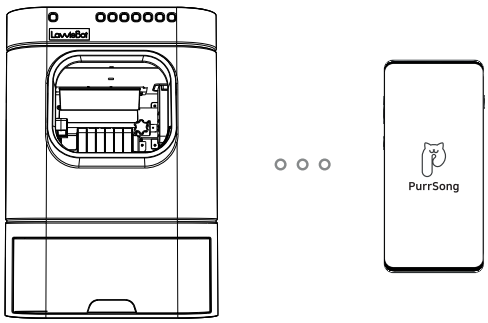

PurrSong app is available on Google Play Store and App Store.

We hope you enjoy our smart LavvieBot life using various features provided on the PurrSong app.

How to Refill Litter

Set up the machine and fill the litter tray with cat litter.
Please use clumping cat litter types for LavvieBot (recommend using LavvieSand for the best performance).
Do not use clay litter, silicone-based litters, or some natural litters with weak clumpings and big-sized particles.
LavvieBot can have a maximum of 12 liters (5-5.5 liters in Litter Tray and 6.5 Liters in Litter Storage).

There are two ways to refill the litter.

1. When a Litter Tray is filled from a Litter Storage
   1) Open the top lid of a litter storage and pour the litter in it.
   2) Press and hold the STORAGE button to perform the mode to start filling a litter tray.
   3) The STORAGE indicator light will go off when the tray is fully filled.
   4) Put extra litter into the litter storage and then it is all set.

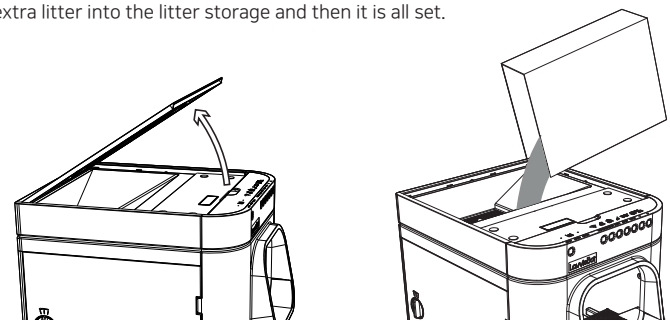

2. When a Litter tray is manually refilled
   1) Open the side door as shown in the picture below and make sure the separator is lifted towards the entrance. If not, press the SEPARATE button to move the separator so that the tray can be taken out.

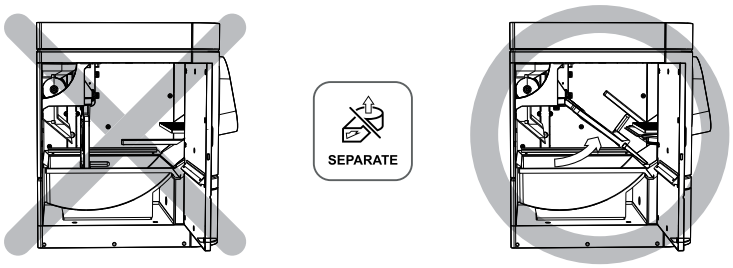

   2) Remove the tray from LavvieBot and look for a line marked inside. This is the baseline that litter has to be filled up to and spread flat. After adding the litter up to the line and make it flat, press and hold the LITTER button for a long time to complete the set-up which is setting up the amount of litter for LavvieBot.

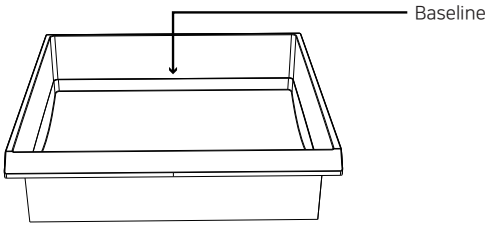

Cleaning LavvieBot

Cleaning Separator

You can easily clean the inside product parts of your LavvieBot.

1. First, press SEPARATE button for more than 2 secs to position the separator perpendicular to the ground.
2. Check inside to see if the separator is heading the right direction and unplug the power adapter.

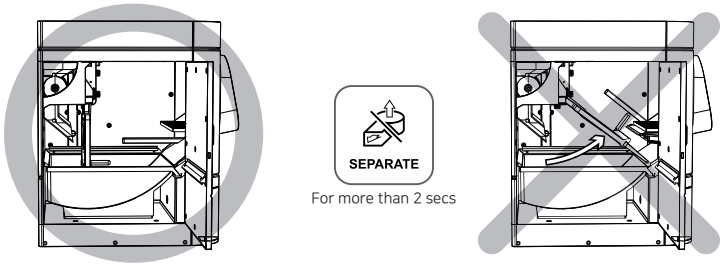

The separator must be placed vertically as in the picture on the left.

3. Now the separator is ready to be cleaned.
   1) Loosen the coupler handle to remove the separator.
   2) Take out the litter tray.
   3) Push the step mat upward to detach it from the unit.

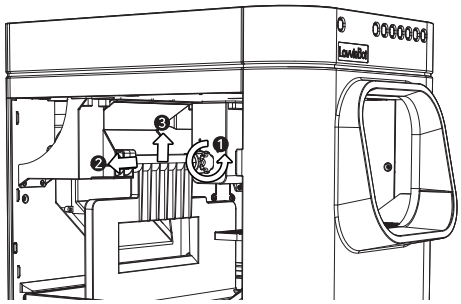

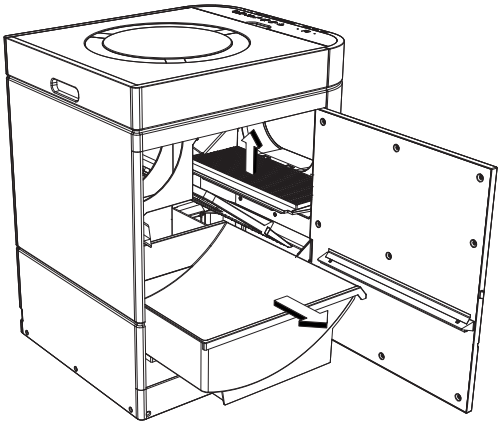

❶ Unscrew the coupler handle counterclockwise.

❷ Open the slide in the same direction as in the picture.

❸ Push the separator upward as in the picture to disassemble.

4. If you're done cleaning the separator, follow the steps below to reassemble it back to LavvieBot.
   1) Push the litter tray back in the unit.
   2) Mount the separator to the coupler.
   3) Screw the coupler handle until it is fixed tightly.
   4) Put the step mat into the groove and press it down to attach.
   5) Close the side door.

Cleaning LavvieBot

Cleaning Litter Storage

If there is a lot of litter left in the storage, you should remove all the litter from the litter tray before cleaning.

1) During the SEPARATE mode, press and hold RESET and STORAGE simultaneously to send all the litter from the storage into the litter tray.
2) Press the SEPARATE button again to go back to the initial status.
3) Open the top lid of the litter storage and pull up the storage.
4) Wash the storage in running water and dry it thoroughly before putting it back. Please make sure that the litter storage is not tilted so that it can be placed onto the weight sensor horizontally.

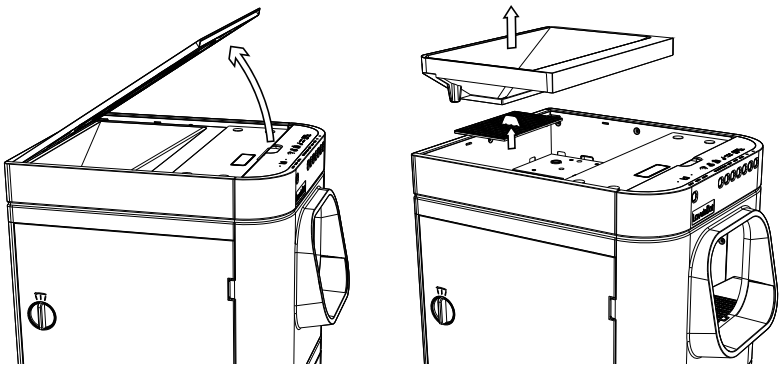

Cleaning Litter Tray

If you want to clean the litter tray only, press the SEPARATE button to raise the separator to take out the litter tray. When putting the tray back, make sure that it is aligned well and fits in the unit smoothly.

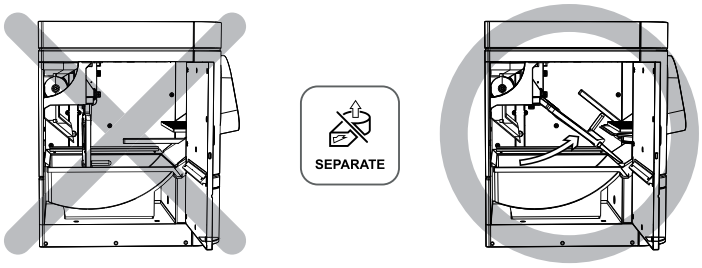

The separator must be raised as in the picture on the right.

Cleaning Interior Walls

If the interior wall of your LavvieBot needs to be cleaned, wipe it with a tightly squeezed damp cloth as if cleaning a refrigerator, and clean the bottom with a broom or a vacuum cleaner. Use a soft sponge to wipe the litter tray to prevent scratches.

FAQs

Q. What should I do if my cat's stool is watery or mushy?

A. If your cat's stool is watery or mushy, it might take a while for the litter to be hardened. In this case, set up the Wait Time to a longer period to give enough time for litter to be hardened so that LavvieBot can clean the clumping.

Q. Is there a recommended size/weight limit of cats to use LavvieBot?

A. We recommend cats weighing between 7.5kg ~ 1kg to use it, but not applicable to large size of breeds such as Maine Coon.

Q. My cat has short legs and joint problems. Isn't the entrance too high for my cat?

A. The height of LavvieBot's entrance is similar to that of a two-story wooden litter box. If your cat's legs are not strong, we recommend placing a cat stair or a cushion in front of the entrance.

Q. Can I use tofu cat litter?

A. Yes, but you must only use the one with small particles, which is compatible with LavvieBot.

Q. Do I have to use a custom-fit waste bag?

A. You can use any bag as long as it fits into the unit but recommend using the custom-fit waste bag. If the size does not match with a waste drawer, LavvieBot may misrecognize that the waste is full and notify you with an inaccurate info.

Q. How much litter does it use?

A. LavvieBot can contain up to 12L of litter in total (about 5 to 5.5L in the litter tray and 6.5L in the litter storage).

Q. What happens if my cat enters LavvieBot while it is cleaning?

A. If your cat enters the machine during the auto cleaning, its front infrared sensor will instantly detect the movement, and the separator will be shifted to standby mode immediately.

Q. Can it distinguish cats?

A. Unfortunately, LavvieBot cannot distinguish cats when their weight difference is 1.6lb or less. To solve this issue, we are working on a cat pendant to help LavvieBot identify cats regardless of their weights.

Q. Do I have to remove all the litter before changing a litter type?

A. Please empty both litter tray and litter storage before changing the litter type. Try not to have/use mixed litter when replacing litter types.

FAQs

Q. What does Location mean in LavvieBot mobile application?

> A. It means the location where your cat and LavvieBot are placed. It is mandatory to choose the Location when registering your cat and LavvieBot.

Q. What is included in the Location?

> A. The Location includes Cat, LavvieBot, and User. It shows the location of cat(s) and LavvieBot(s), and user can check such information by entering that location.

Q. What is Authority of Location? What is Authority given at a location?

> A. There are Super User and User. A Super User is the person who creates a Location and holds an authority to delete that Location. One can not only register and change the information of Cat and LavvieBot, but also choose the next Super User and grant authority when leaving the location. However, non-Super User can only access to information of the Location as a participant.

Q. How should I distinguish the Location?

> A. You can distinguish Location based on your cat's daily living space. For example, if you have two LavvieBots in your house and multiple cats are using both LavvieBots, all your cats and the LavvieBots should be registered under the same Location. If your cats have their own preference and use only one of the two LavvieBots, register them under a different Location accordingly so that you can have precise information.

Money Back Guarantee and Warranty

Returns and Refunds

If you are not satisfied with this product, for whatever reason, it is possible to return it for refund within 30 days of receipt. You must first advise RobotShop at support@robotshop.com. RobotShop will provide you with a Return Authorization number. No returns will be accepted without having a previously obtained RA number.
The product must then be returned in its original packaging.

Please note that all items will be reimbursed within 7 days of receiving the product (shipping fees excluded). You must also cover the cost of returning the product. Shipping fees will only be refunded if the return is a result of a shipping error on our part. Cleaning fees (50$) may also be charged if the Lavviebot S is returned and has not been properly cleaned. Please make sure the Lavviebot S is cleaned and carefully packaged and in its original packing prior to return.

Warranty North-America

Your Lavviebot S is covered by a 1 year warranty starting from the date of shipment. This warranty covers all parts and labor for manufacturer defects and is taken care of by a RobotShop certified repair center. Customers must first obtain a return authorization by contacting RobotShop at support@robotshop.com.

If you have any questions, concerns or need assistance, contact RobotShop Inc.; we'll be glad to help.

support@robotshop.com
1-866-627-3178 Toll-free (in North America)

Warranty Europe

Your Lavviebot S is covered by a 2 year warranty starting from the date of shipment. This warranty covers all parts and labor for manufacturer defects and is taken care of by a RobotShop certified repair center. Customers must first obtain a return authorization by contacting RobotShop at support@robotshop.com.

If you have any questions, concerns or need assistance, contact RobotShop Inc.; we'll be glad to help.

support@robotshop.com
+33 8 01 90 23 42 (Toll free within the European Union)

Precautions

- This product contains sensitive electronically controlled components and must be used indoor that is not exposed to moisture and direct sunlight for residential use.
- If removable parts (the rake, the mat etc.) are not fully engaged as written in the guideline, they can be damaged and pose a threat to your cat's safety. Please make sure that they are fully engaged before using the product.
- If necessary actions are not taken according to the indicator light, the product can be damaged, so please follow directions or required actions accordingly in a timely manner.
- Make sure to have children avoid entering or contacting the product while it is operating.
- Do not wash the main unit. Remove a litter tray or a separator under a safe condition and clean them with a damp soft cloth, and then dry it thoroughly before putting it back.
- For further information for safety and use, visit www.lavviebot.com for more details.
- Any failure arising from failing to acknowledge or comply with this information may be outside the scope of warranty.

MARKING ACCORDING TO THE ELECTRICAL APPLIANCES AND CONSUMER PRODUCTS SAFETY CONTROL ACT

· Certification Number: KC ID: R-R-PSw-LavvieBot2
: FCC ID : 2AWFPLAV2
: IC : 26107-LAV2
· Product Name: Smart Automatic Cat Litter Box
· Model Name: LavvieBot S
· Input: DC 12V ⎓ 5A
· Temperature setting for the use: -10℃ ~ 50℃
· Place for the use: For residential use (indoor)
· Manufacturer : PurrSong, Inc.
· Address: 3F, 538, Daedeok-daero, Yuseong-gu,
Daejeon, Republic of Korea
· Country of Origin: Republic of Korea
· Date of manufacture: Indicated separately
· RF SPEC.

1. Bluetooth
   - Frequency : 2 402 ~ 2 480 MHz
   - Version : Bluetooth Low Energy 4.1
   - Channel : 0~39 Channel
   - Maximum Power
   # Class 2 : 2.8 mW (4 dBm) ~ 0.25 mW (-6 dBm)
   - Maximum Bandwidth : 2MHz
   - Technology : FHSS
2. Wi-Fi
   - Protocol : IEEE 802. 11b/g/n_HT20/n_HT40 Supported
   - Frequency : 2 412 ~ 2 462 MHz (802.11b/g/n_HT20)
   2 422 ~ 2 452 MHz (802.11n_HT40)
   - Technology : DSSS (802.11b),
   OFDM (802.11g/n_HT20/n_HT40)
   - Min 17.5 dBm / Typical 18.5 dBm / Max 20 dBm

· Designed by PurrSong, Inc.

R-R-PSw-LavvieBot2

211-171102
XXX-XXXXXX

Tested To Comply With FCC Standards
FOR HOME OR OFFICE USE

FCC ID : 2AWFPLAV2
IC : 26107-LAV2

Contains FCC ID : 2AC7Z-ESPWROOM32D
IC : 21098-ESPWROOM32D

FCC COMPLIANCE STATEMENT

· This device complies with part 15 of the FCC Rules. Operation is subject to the following two conditions : (1) This device may not cause harmful interference, and (2) This device must accept any interference received, including interference that may cause undesired operation.

· CAUTION: Changes or modifications not expressly approved by the party responsible for compliance could void the user's authority to operate the equipment

· RF Exposure Statement
A minimum separation distance of 20 cm must be maintained between the antenna and the person for this appliance to satisfy the RF exposure requirements

· Industry Canada Statement
This device complies with Industry Canada license-exempt RSS standard(s). Operation is subject to the following two conditions: (1) this device may not cause interference, and (2)this device must accept any interference, including interference that may cause undesired operation of the device.

· Énoncé d'Industrie Canada(IC)
Le present appareil est conforme aux CNR d'Industrie Canada applicables aux appareils radio exempts de licence. L'exploitation est autorisee aux deux conditions suivantes : (1) l'appareil ne doit pas produire de brouillage, et (2) l'utilisateur de l'appareil doit accepter tout brouillage radioelectrique subi, meme si le brouillage est susceptible d'en compromettre le fonctionnement.

· Tout changement ou modification non expressément approuvé par la partie chargée de la mise en conformité peut annuler le droit de l'utilisateur à utiliser l'équipement.

· Déclaration d'exposition aux RF
Une distance de séparation minimale de 20 cm doit être maintenue entre l'antenne et la personne pour que cet appareil satisfasse aux exigences d'exposition aux RF