Attendant®

BLUETOOTH COLUMN SCALE

Owner's Manual

Please keep and refer to this Owner's Manual.

FCC ID:2AWG7-SOLO-DS
Model Name: SOLO-DS

Thank you for purchasing an Attendant® Bluetooth Column Scale. Please read this entire guide carefully and keep it for future reference. This guide will provide you with instructions, warnings, warranty information and other important information about your Attendant® Bluetooth Column Scale. Share this information with those individuals who will be assembling, using, servicing and/or cleaning the Product to help ensure it is cared for properly.

1-800-245-9917

Table of Contents

Introduction 3
Definitions and Symbols 3
Warnings 4
Proper Disposal 4
FCC Compliance Statement 4
Specifications 5
Features 5
Installation ..... 6 - 10
  Unpacking 6
  Assembly ..... 7 - 9
  Installing The Carpet Feet 10
Optional Handrail Installation ..... 11 - 12
  Unpacking 11
  Installation ..... 11 - 12
Unit Selection 13
Battery Operation 14
  Installation/Replacement 14
  Low Battery 14
  Automatic Shutoff 14
Optional AC Power Adapter 15
Operation ..... 16 - 20
  Keypad Functions 16
  Annunciators 17
  Weighing Mode 18
  Height and/or BMI Measure Mode 19
  Optional BMI Mode 19
  Height Rod Operation 20
Setup ..... 21 - 22
Calibration ..... 23 - 24
Data Transmission Format 25
Bluetooth Low Energy 26
Display Messages 27
Troubleshooting 28
Care and Cleaning 29
Limited Warranty 30
Customer Service 31

Introduction

Thank you for purchasing the Attendant® Bluetooth Column Scale. This scale has been tested before leaving the factory to ensure accuracy and dependability for years to come.

In this owner's manual, you'll find important information you should read before assembling or using this product. Please keep this manual in a safe place for future reference.

If at any time you do not understand how to use this product, or you suspect it may be damaged, DO NOT USE and immediately contact the distributor that sold this product to you.

This owner's manual is compiled from the latest specifications and product information available at the time of publication. Changes may be made to this manual at any time. Contact your distributor for a current copy of this owner's manual.

Definitions and Symbols

NOTE: Indicates a tip.
CAUTION: Indicates correct operating or maintenance procedures in order to prevent damage to or destruction of the equipment or other property.
WARNING: Calls attention to a potential danger that requires correct procedures or practices in order to prevent personal injury.
⚠**:** Attention. Read the instructions.
⚠**:** Electrical Shock Hazard Warning.
Device: Your Attendant Bluetooth Column Scale
We, Us and Our: Direct Supply Manufacturing, Inc.
You means the user, caregiver or any other individuals who will be using or servicing the product.
Distributor means the reseller or other entity from whom you purchased this product.
Medical Professional: The physician or other healthcare professional who is familiar with the user's medical history and current medical condition, and who is responsible for determining if this product is medically appropriate for the user.
Caregiver: The individual(s) responsible for the care and needs of the user, such as a spouse, adult family member or home health aide. The caregiver must be available at all times to provide the user with physical and cognitive assistance and provide supervision as needed.
User: The individual who uses the device.

Serial Number

_____

Date of Purchase

_____

Purchased From

_____

_____

_____

RETAIN THIS INFORMATION FOR FUTURE USE

Warnings, Proper Disposal & FCC Compliance Statement

Warnings

Read and follow all directions and warnings before use or assembly. Do not use or assemble if you do not understand the contents of this manual – contact your distributor for assistance. Damage, injury, or even death may result from improper use of this product or not following directions and warnings. This product is intended for use in normal, indoor conditions. This product may not be appropriate for all individuals.

⚠ **WARNING:** Prior to use of this product, the User's Medical Professional should be consulted to ensure this product is appropriate for the User's specific needs based upon his or her overall medical condition and limitations.

Proper Disposal

When this device reaches the end of its useful life, it must be properly disposed of. It must not be disposed of as unsorted municipal waste. Within the European Union, this device should be returned to the distributor from where it was purchased for proper disposal. This is in accordance with EU Directive 2002/96/EC. Within North America, the device should be disposed of in accordance with the local laws regarding the disposal of waste electrical and electronic equipment.

It is everyone's responsibility to help maintain the environment and to reduce the effects of hazardous substances contained in electrical and electronic equipment on human health. Please do your part by making certain that the device is properly disposed of. The symbol shown to the right indicates that this device must not be disposed of in unsorted municipal waste programs.

FCC Compliance Statement

This equipment generates, uses, and can radiate radio frequency and if not installed and used in accordance with the instruction manual, may cause interference to radio communications. It has been designed within the limits for a Class A computing device pursuant to Subpart J of Part 15 of FCC rules to provide reasonable protection against such interference when operated in a commercial environment. Operation of this equipment in a residential area may cause interference in which case the user will be responsible to take whatever measures necessary to correct the interference.

You may find the booklet "How to Identify and Resolve Radio TV Interference Problems" prepared by the Federal Communications Commission helpful. It is available from the U.S. Government Printing Office, Washington, D.C. 20402. Request stock No. 001-000-00315-4.

Specifications & Features

Specifications

Capacity:	550 lb. x 0.2 lb (250 kg x 0.1 kg)
Weight Units:	Pounds or Kilograms (selectable)
Power Requirements:	Six (6) "AA" size Alkaline batteries (included) OR an optional 9V AC/DC wall plug-in adapter
Display:	Five digit, seven segment, 1.0" (25 mm) high LCD
Operation Temperature:	50 to 104 °F (+10 to +40 °C)
Function Keys:	ON/OFF, BMI HEIGHT, ENTER, LOCK/RELEASE, PRINT, ZERO, ⬆UP ARROW and ⬇DOWN ARROW
Dimensions:	14.3"W x 19.5"D x 52.0"H (36.3 cm W x 49.5 cm D x 132.1 cm H)
Weight:	17.7 lb. (7.7 kg)
Height Rod Units:	Inch or cm
Height Rod Range:	30 to 84.5" (76 to 214.5 cm)
Operating frequency:	2402MHz-2480MHz

Features

- Low-profile platform (2.4" / 6.1 cm high)
- Body Mass Index (BMI) calculation
- OneWeigh weighing units locking into pounds or kilograms[1]
- Manual input height 2' 0.0" to 7' 10.5" by 0.5" (60.0 cm to 240.0 cm by 1 cm)
- Audible beep confirmation (A short beep when a key is pressed, and a long beep for when weight is stable and locked)
- Selectable Auto Shut-Off feature (up to 9 minutes)
- Auto Weight Lock feature on stable weight
- Power-Up Zero
- USB output function (ASCII protocol)
- Bluetooth Low Energy (BLE)
- Integral wheels
- In-line mechanical height rod
- Optional handrail available

[1]*The weighing units are selected at Scale Initialization (when the scale is powered on for the first time).*

Unpacking

Remove Display with Upper Outside and Inside Column (1) (already assembled), Lower Inside Column (2), Lower Outside Column (3), Scale Platform (4) and Hardware Pack (6) from shipping carton. After removing from carton, check for any damage that may have taken place during shipment. Keep and use the original carton and packing material for return shipment if it should become necessary. Remove all plastic wrapping, foam fillers and cardboard material from scale platform, display and other components. You should have the following components:

1 – Display with Upper Outside and Inside Column (pre-assembled)
2 – Lower Inside Column
3 – Lower Outside Column
4 – Scale Platform (with Column Housing Cover)
5 – (4) Carpet Feet
6 – Hardware Pack, containing:
  (4) M5 x 15 Machine Screws
  (4) Lock Washers
  (2) M3 x 12 Screws

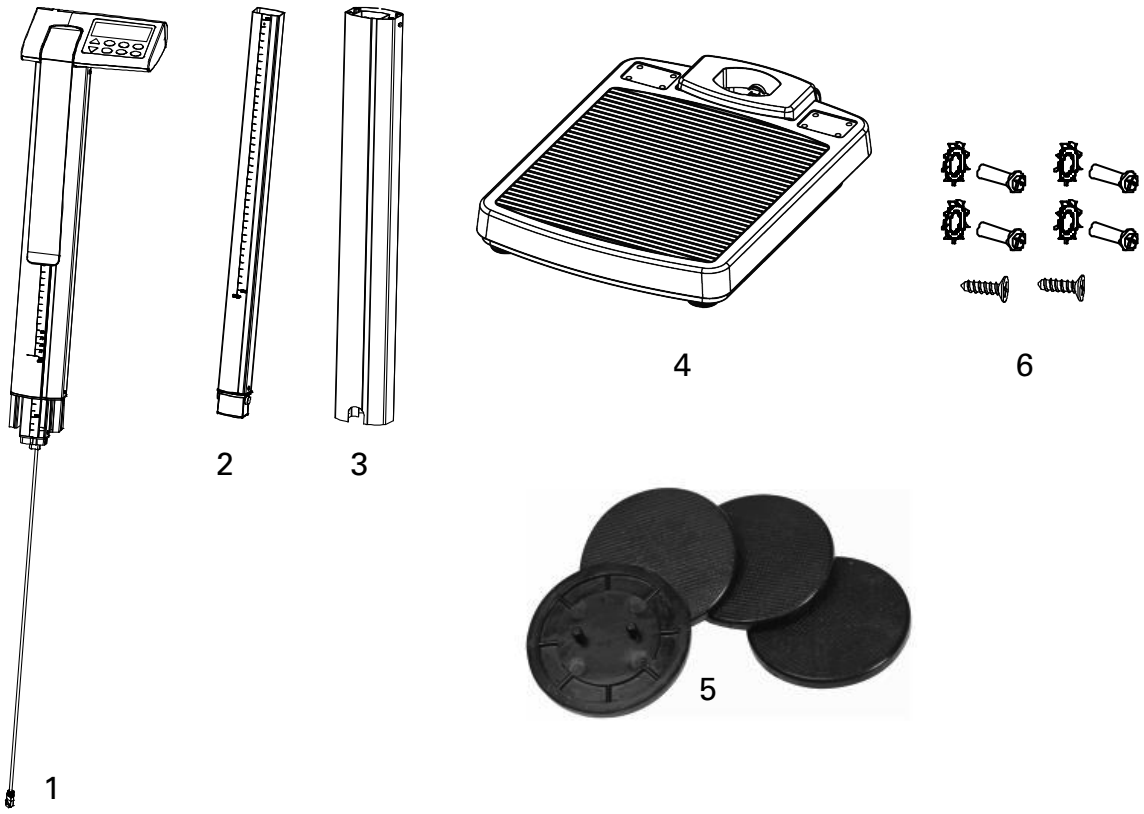

Assembly

Step 1

1. Align Part 2 (lower inside column) with Part 1 (pre-assembled display upper outside display upper outside display upper outside display upper outside display upper outside display upper outside and inside column and inside column).
2. Press the parts together until the locking tab snaps in place.
3. Ensure that the locking tab is locked securely.

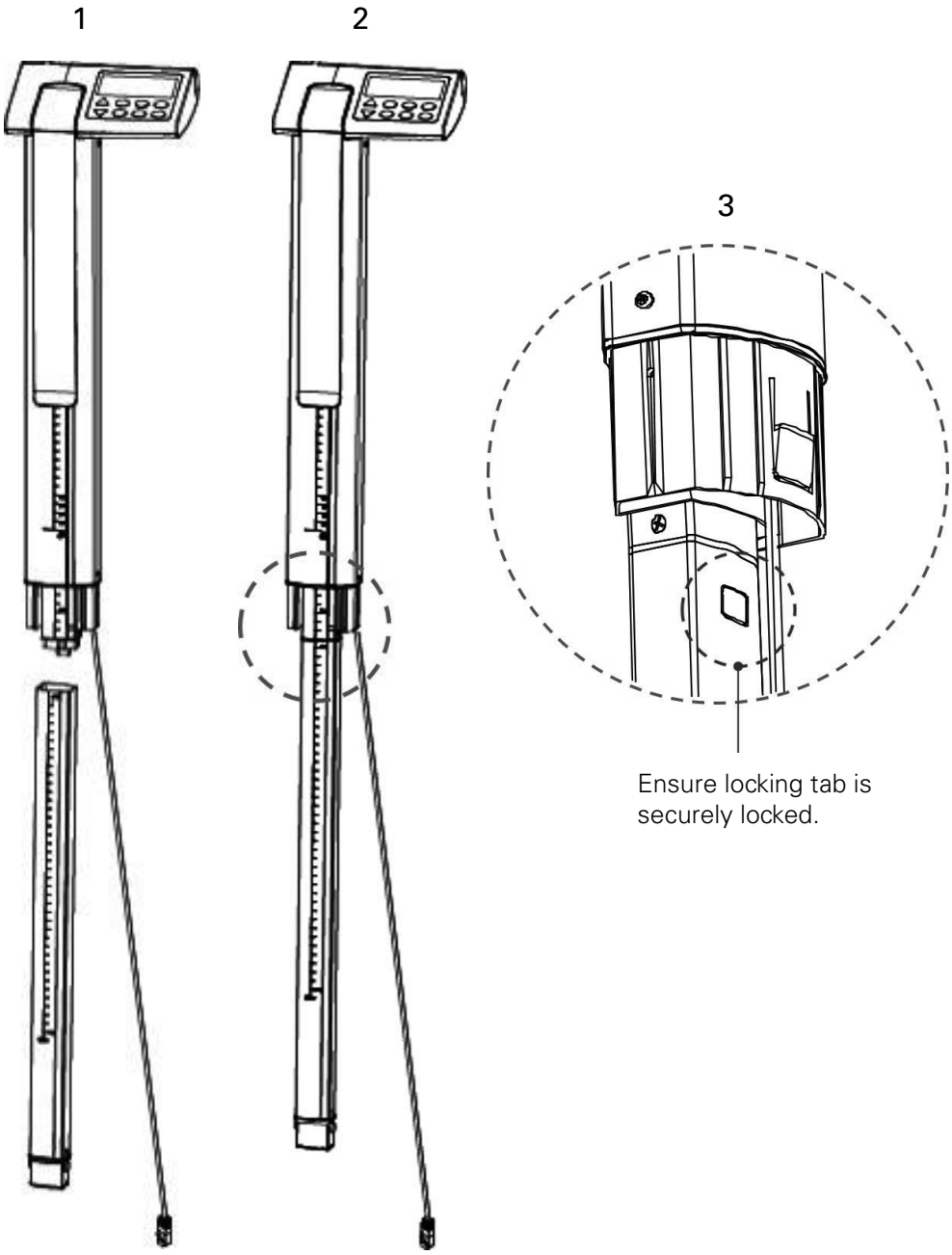

Step 2

1. Align Part 3 (lower outside column) with assembled Part 1 and 2 (display upper outside and inside column, and lower inside column).
2. Press the locking tab (on Part 2, lower inside column) inward and then insert into Part 3 (lower outside column).
3. Slide the cable connector through Part 3 (lower outside column).
4. Press Part 3 and Part (1 and 2) together until the locking tab snaps in place.
5. Ensure that the locking tab is locked securely.
6. Install (2) M3 x 12 machine screws (one in each side of Part 3) to secure Part 1 and 2 together with Part 3.

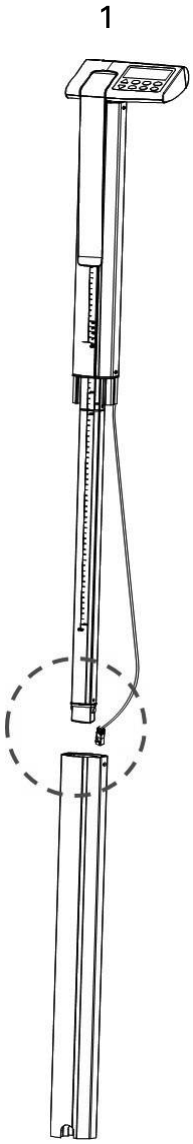

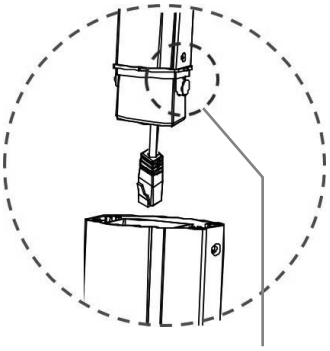

Press locking tab inward to insert Part 2 into Part 3.

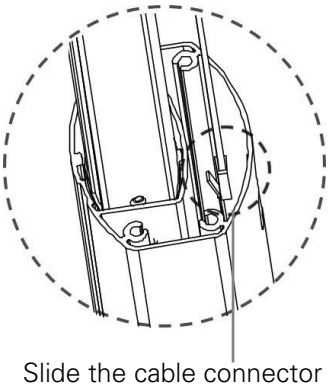

Slide the cable connector through Part 3.

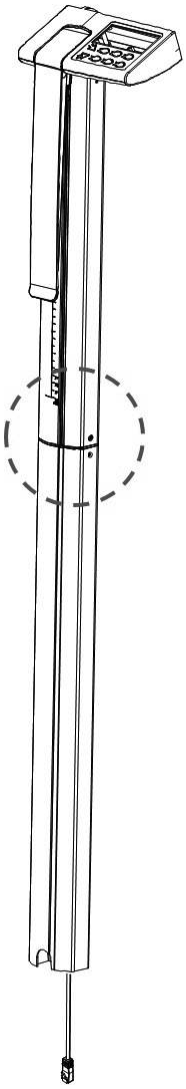

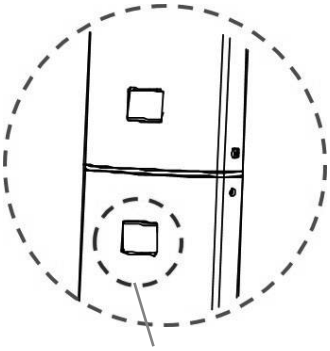

Ensure locking tab is securely locked.

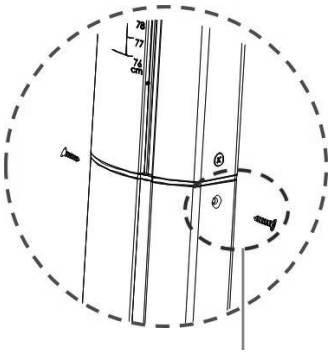

Install (1) M3 x 12 screw on each side of Part 3.

Step 3

1. Plug the cable connector into the RJ jack located on the Part 4 (scale platform).
2. Align the display and assembled column with Part 4 (scale platform) and insert the column into opening of the scale platform.

⚠ **CAUTION!** To avoid pinching or cutting the cable, make sure the cable is not between the base and column when inserting the column into the base.

3. While holding the column in place, carefully lay the scale down with the column horizontal to floor.
4. Attach the column to the scale platform by inserting the (4) M5 x 15 machine screws and lock washers through the holes in the scale platform into the threaded holes of the column. Tighten the screws to secure the column to the scale platform.

The scale should be placed on a flat, level hard-surfaced floor or low-cut, unpadded carpet, away from any rapidly moving air source (heating and cooling vents).

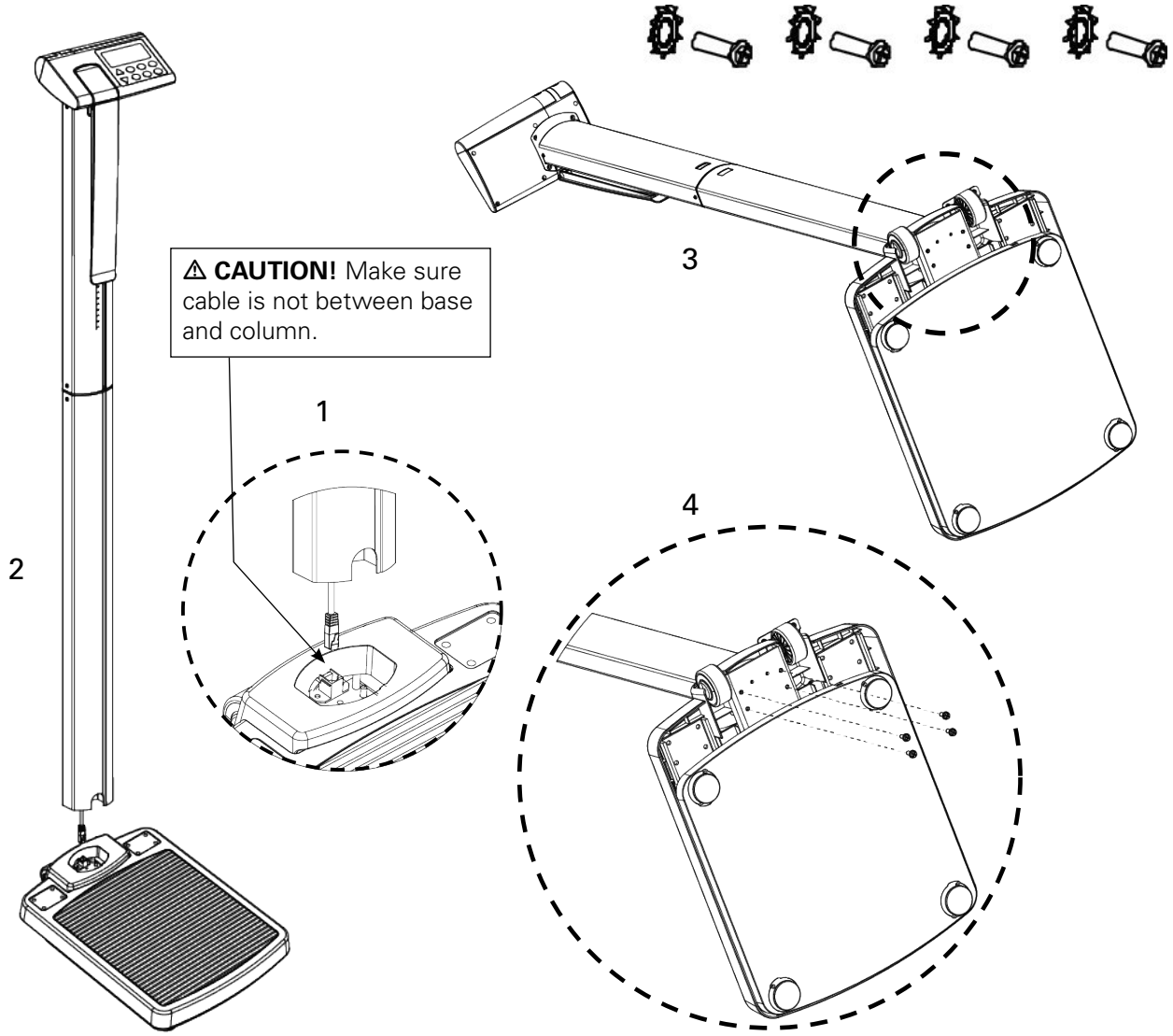

Scale Assembly, Step 3

Installing the Carpet Feet

If you are using your scale on a carpet, it is recommended to use the included carpet feet. To install the carpet feet, perform the following:

1. Remove the four (4) carpet feet from the packaging.
2. Align the prongs of one carpet foot with the holes in one of the scale's existing feet.
3. Insert the carpet foot prongs into the holes, making sure the prongs align straight up and down with the holes of the scale foot.
4. Being careful not to twist the carpet foot, with even pressure, gently push straight down on the carpet foot to seat it into the scale foot.
5. Repeat steps 2 through 4 for the remaining three scale feet.

Optional Handrail Installation

Unpacking

Remove the Handrail and Hardware Pack from the shipping carton, and then remove all plastic wrapping. Check for any damage that may have taken place during shipment. Keep and use the original carton and packing material for return shipment if it should become necessary. The purchaser is responsible for filing all claims for any damages or loss incurred during transit.
You should have the following components:

(1) Handrail
(1) Hardware Pack, containing:
(8) M5 x 25 Machine Screws
(8) M5 Nuts

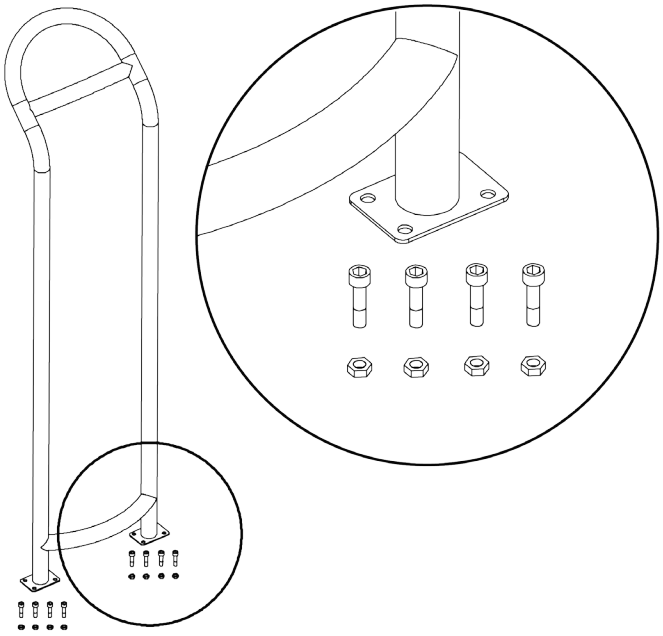

Installation

1. Referring to Figure No. 1, remove the handrail covers, (one on each side of the column) from the scale platform.

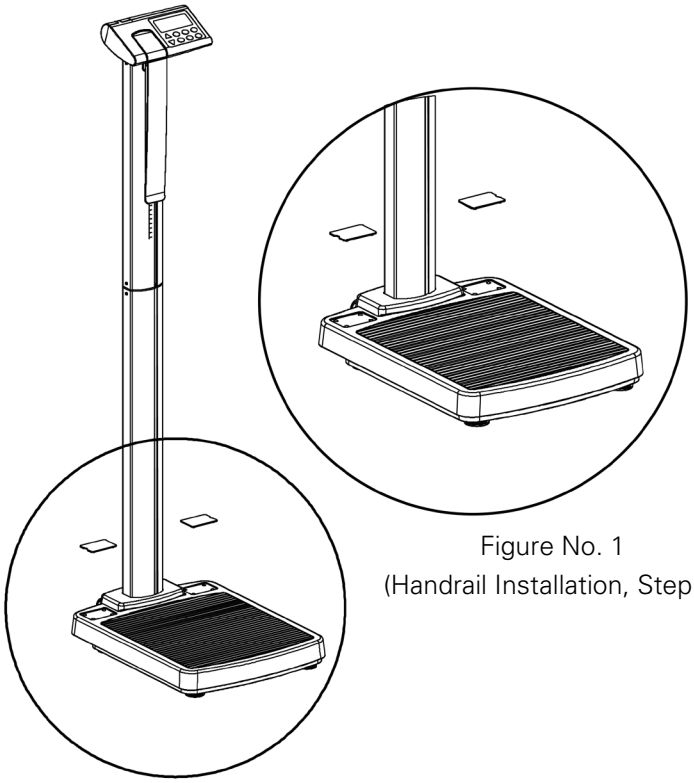

Figure No. 1
(Handrail Installation, Step 1)

Optional Handrail Installation *(cont.)*

2. Referring to Figure No. 2, position the handrail over the display and column, and then carefully lay the scale down with the column horizontal to the floor.
3. Place the handrail against the scale platform, aligning the holes in the handrail with the holes in the scale platform.
4. Referring to Figure No. 3, insert the (8) M5 x 25 machine screws through the holes in the handrail and scale platform and secure with the M5 nuts.
5. Tighten the (8) screws and nuts to secure the handrail to the scale platform.

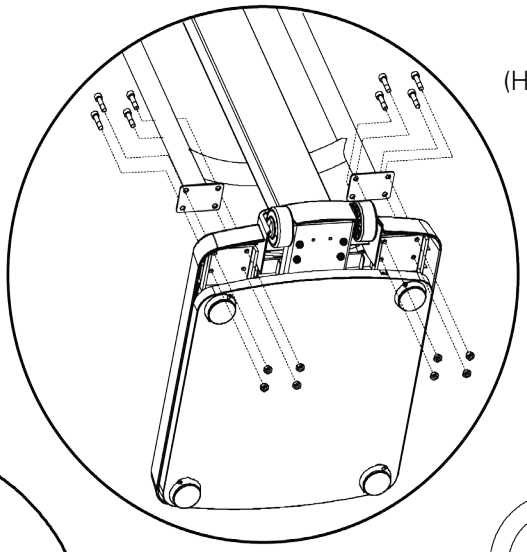

Figure No. 3
(Handrail Installation,
Steps 4 and 5)

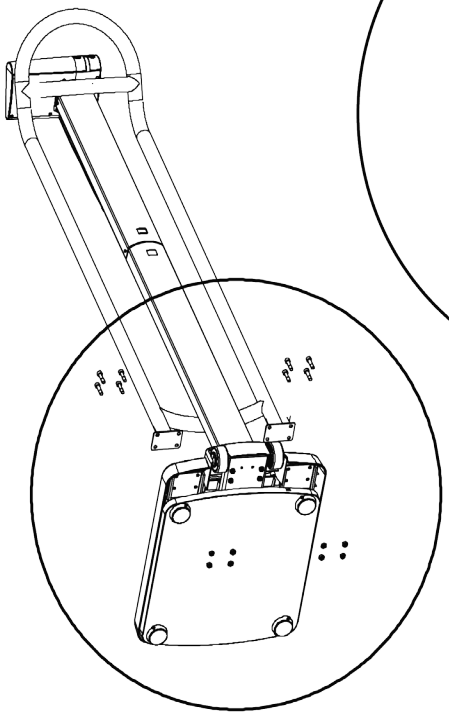

Figure No. 2
(Handrail Installation, Steps 2 and 3)

6. Periodically re-check the screws securing the handrail to the scale platform for tightness.

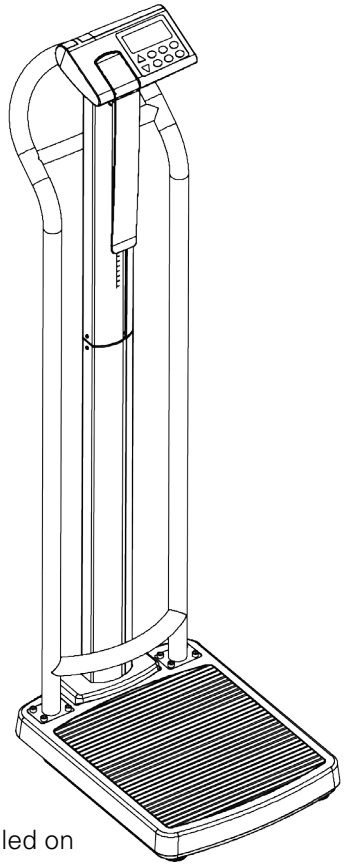

Figure No. 4
(View of handrail installed on
scale platform)

Unit Selection

When the scale is powered on for the first time, all digits on the display will turn on and then change to show the software version for a few seconds and finally prompt for which weighing unit to use, **lb.** or **kg**.

1. The display will show ***UNIT,*** and flash the lb. annunciator, the current unit setting. If the setting displayed is acceptable, press the "↵" key to save it. Othewise, use the ⬆ or ⬇ keys to select a different unit **lb. / kg** and then press the "↵" key to save it.
2. The display will change to show a small ***o*** moving across the display and then show ***0.0***.
3. The scale is now ready for operation.
4. Once the unit is set it will be kept.

Battery Operation

To operate the Attendant® Bluetooth Column Scale with batteries, you must first install the included six (6) "AA" size alkaline batteries. Batteries are contained in a battery holder inside the display. Access is via a removable cover on the back of the display.

Installation/Replacement

To install or remove the batteries, the following steps should be followed:

1. Standing behind the scale, locate the battery cover on the back of the display.

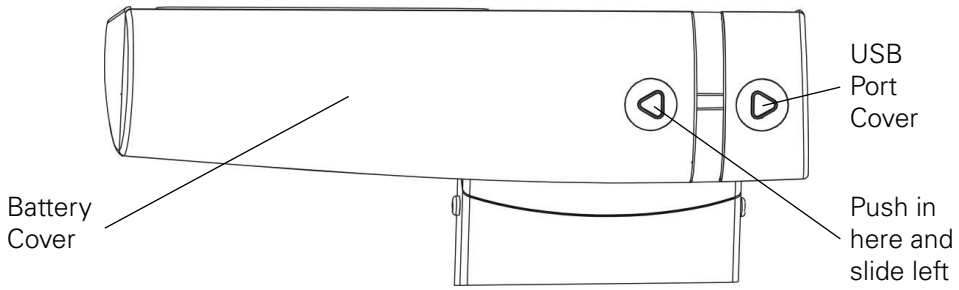

2. To install or replace the batteries, first remove the battery cover by pushing in on the arrow and sliding the cover approximately ¾" (20mm) to the left and then lifting it away from the display.
3. If installing new batteries, proceed to step 4. If replacing the batteries, remove all six (6) batteries from the battery holder, then proceed to step 4.
4. Install the six (6) new "AA" size batteries in the battery holder, noting the polarity markings located in the battery holder.

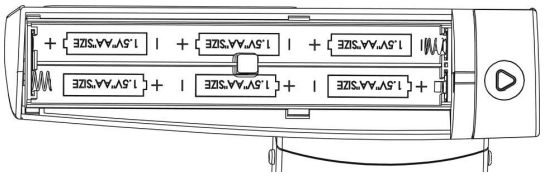

5. Replace the battery cover on the back of the display approximately ¾" (20 mm) from the right side of the display and then slide it to the right until locks in place (it will click when locked in place).
6. The display should turn on, show all digits and the software version for a few seconds, followed by a small ***o*** moving across the display and then show ***0.0*** on the display.
7. The scale is now ready for operation.

NOTE: If the display did not turn on, remove the battery cover and check for one or more improperly positioned batteries.

Low Battery

When the batteries are near the point they need to be replaced, ***LobAt*** will be shown on the display. If the battery voltage drops too low for accurate weighing, the scale will shut off and you will be unable to turn it back on. When the ***LobAt*** message is displayed, the operator should replace the batteries or remove the batteries and plug in the 9V AC/DC adapter.

Automatic Shutoff

The Automatic Shutoff feature will turn the scale off after a period of inactivity (no motion or weight on scale) to prolong battery life. The period of inactivity for the automatic shutoff is selected during the setup process of the scale and can be set for up to nine (9) minutes. To turn the scale back on, you simply press the "⏻" key.

Optional AC Power Adapter

To power the scale using the optional 9V AC/DC wall plug-in adapter, connect the plug from the adapter into the power jack on the back of the scale base and then plug the power adapter into the proper electrical outlet. On models requiring 220V AC, it is the customer's responsibility to obtain the correct power adapter plug. The scale is now ready for operation.

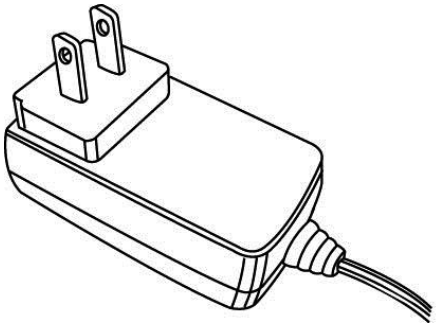

Optional PD-AC
(Medical device 9V AC/DC
Adapter, includes USA Plug)

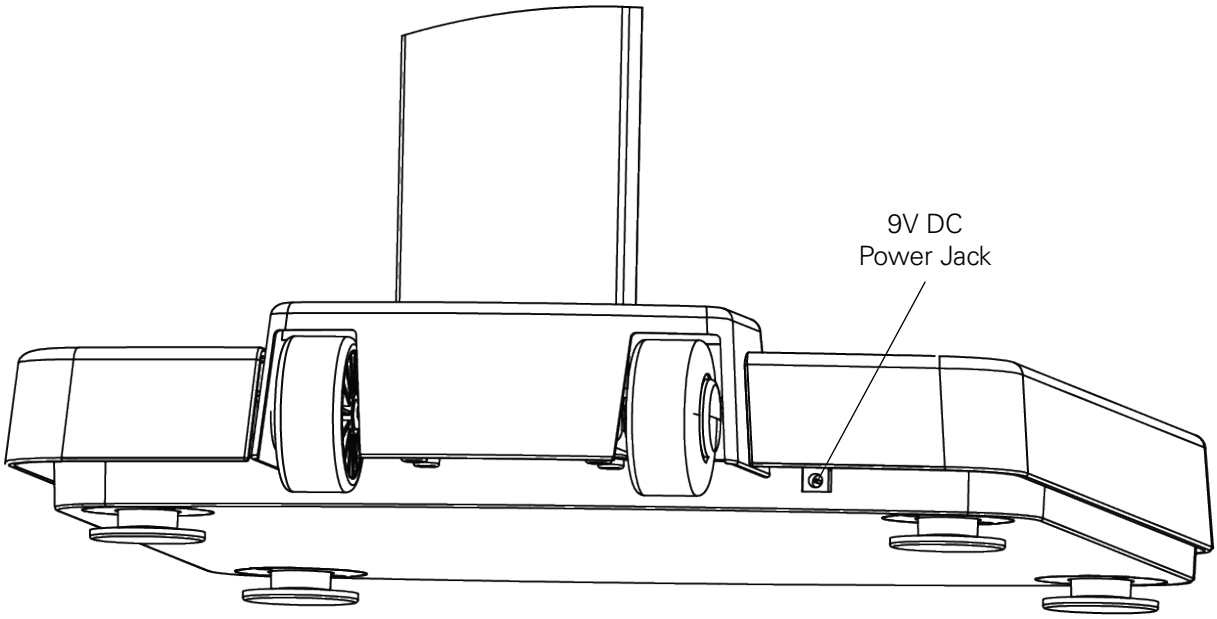

Keypad Functions

⚠ **WARNING:** DO NOT operate the keypad with pointed objects (pencils, pens, etc.). Damage to keypad resulting from this practice is NOT covered under warranty.

ON/OFF
With the scale off, pressing this key will apply power to the scale and turn on the display. If the scale is on, pressing this key will turn the scale off.

PRINT
This key is used to send the weight and associated data to the serial port.

ENTER
This key serves two purposes. First, when reviewing setup parameters, pressing the "↵" key will accept the current displayed setting of the parameter. Second, the "↵" key is used to signal completion of the entry of data (in both setup and operation) and causes the scale to process the data entered.

ZERO
This key is used to reset the display to zero. Note that if the "zero" key is pressed with weight on the scale platform, the display will tare the weight and change to ***0.0***. When the weight is removed, the display will show a negative weight value and then change to ***0.0***.

LOCK/RELEASE
This key is used to lock and unlock the display. Pressing this key will cause the display to lock onto the weight and remain displayed after the user steps off the scale. Pressing the key again will unlock the display and return it to zero.

NOTE: The scale will not respond to pressing the "🔒|🔓" key unless the weight is stable and the STA annunciator is turned on.

BMI
The BMI key is used to input the user's height and then to perform the Body Mass Index (BMI) calculation. Note that the scale will not respond to pressing the key unless the weight is stable. When using the height rod (or no height rod), pressing the key once allows the operator to enter the height of the user using the ⬆ or ⬇ keys to increment or decrement to the correct height. After entering the user's height, pressing it again will display the Body Mass Index (BMI) calculation. Pressing it a third time, will return the display to the user's weight.

NOTE: While the user is still standing on the scale, pressing the "↵" key will toggle between BMI and weight display. Also, note that once the user steps off the scale, the display automatically returns to the weight only mode.

UP ARROW
This key is used when performing the Body Mass Index (BMI) calculation to increase the height value When using the Mother/Baby Weighing feature, this key is used to determine the weight of infants and toddlers held by an adult. This feature allows the adult to be weighed first, and then the adult and infant/child weighed with only the weight of the infant/child displayed..

DOWN ARROW
This key is used when performing the Body Mass Index (BMI) calculation to decrease the height value.

NOTE: During setup and calibration, the arrow keys are used to select setup and calibration values.

Annunciators

The annunciators are turned on to indicate that the scale display is in the mode corresponding to the annunciator label or that the status indicated by the label is active.

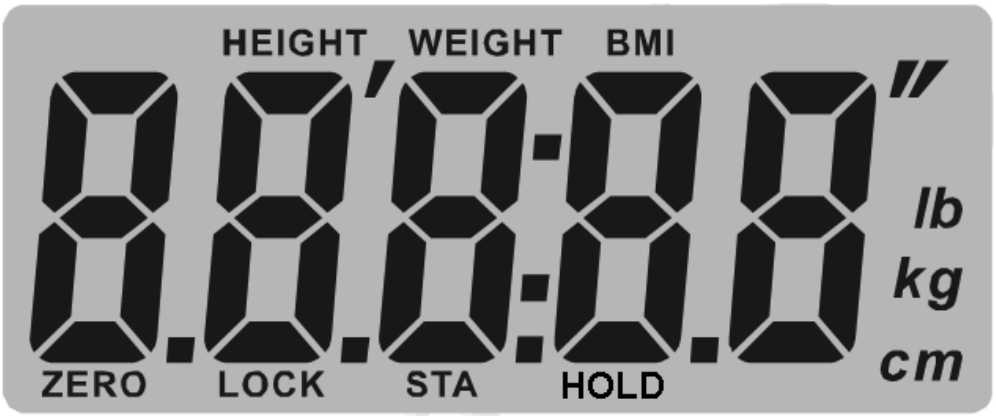

ZERO
This annunciator is turned on to indicate the weight displayed is within +/- 1/4 division of the center of zero.

LOCK
This annunciator is turned on to show that the scale is locked onto the displayed weight.

STA
This annunciator is turned on when the weight on the scale is stable.

HOLD
This annunciator is turned on to show that the weight display is locked with the last stable weight reading.

lb.
This annunciator is turned on to indicate the displayed weight is in pounds.

kg
This annunciator is turned on to indicate the displayed weight is in kilograms.

cm
This annunciator is turned on when the displayed height measurement is in centimeters.

' "
These annunciators are turned on when the displayed height measurement is in feet and inches.

HEIGHT
This annunciator is turned on when the scale is in the height measurement mode.

WEIGHT
This annunciator is turned on when the scale is in the weight only mode.

BMI (Body Mass Index)
This annunciator is turned on when displaying the calculated Body Mass Index.

This annunciator is turned on when the scale is in the Mother/Baby Weighing mode.

This annunciator is turned on when the scale is connected to the app via BLE. Note that when the scale is looking for a connection, this annunciator will be blinking.

⚠ **WARNING:** ALWAYS assist the user when stepping on and off the scale platform to ensure they do not fall. NEVER leave a user unattended while they are on the scale platform. Failure to maintain control of the user at all times can result in serious injury to you and/or the user.

Weighing Mode

1. Press the "⏻" key. The scale will turn on and then display the software version for a few seconds.
2. Next, a small ***o*** is shown and moves across the display until a stable zero is established.
3. After establishing zero, the scale will show ***0.0*** on display. Note that if the scale cannot establish zero, the display will show ***Err0*** for a few seconds and turn the scale off.

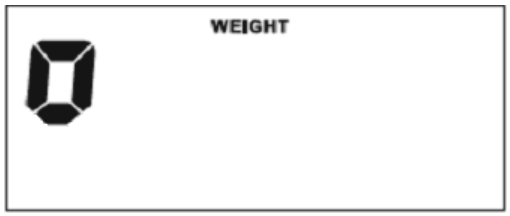

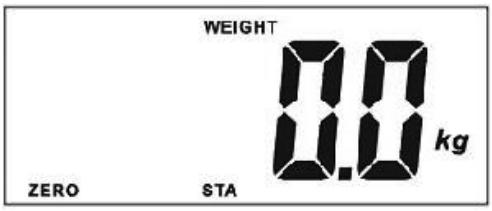

4. Assist user onto scale.
5. When the weight is stable, the weight reading will flash one time, a long beep will sound, the reading will automatically lock and the LOCK annunciator will turn on. Note that the lock will be released once the user steps off the scale.
   NOTE: If the weight increases or decreases more than 2 kg while the weight reading is locked, the locked weight will automatically be released, and the new weight will be locked when it's stable.
6. Press the "🔒" key to hold the current weight reading. It will remain on the display after the user steps off the scale. Press the "🔒" key again to release the current weight reading.

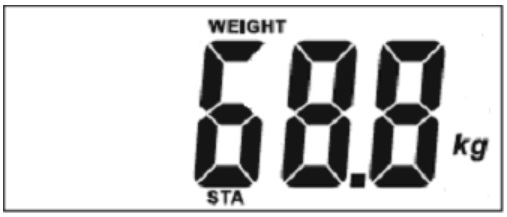

(Released)

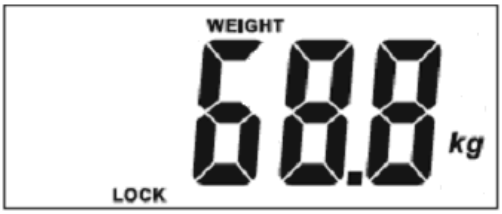

(Hold)

7. Assist user off scale.
8. To turn scale off, press the "⏻" key.
   If the Automatic Shutdown feature has been enabled, the scale will turn off after a predefined time of inactivity (no motion or weight on scale).

Height and/or BMI Measure Mode (using Height Rod or no Height Rod)

1. Assist user onto scale.
2. The display will show the user's weight.
3. Read and record weight displayed.
4. Press the "BMI" key to enter the Height mode.
5. Scale display show ***5'00.0"*** if units is pounds or 160.0cm if units is kilograms.
6. Press the ⬆ or ⬇ keys to increment or decrement to correct height.
7. Press the "↵" key. The display will change to show the BMI (Body Mass Index).
8. Read and record user's BMI.
9. Press the "↵" key once more and the scale returns to user's weight.

NOTE: While the user is still standing on the scale, pressing the "↵" key will toggle between BMI and weight display.

10. Assist user off scale
11. Once user steps off scale, display automatically returns to weight only mode.
12. To turn scale off, press the "⏻" key.
    If the Automatic Shutdown feature has been enable, the scale will turn off after a predefined time of inactivity (no motion or weight on scale).

Optional BMI Mode

1. Press the "⏻" key.
2. The scale will show ***0.0*** on display.
3. Press the "BMI" key. The display will go blank and the BMI annunciator will turn on.
4. Assist user onto scale. The user's weight will be displayed.
5. When weight is stable and locked, the scale automatically changes to the Height mode.
6. Scale display will show ***5'00.0"*** if units is pounds or ***160.0 cm*** if units is kilograms.
7. Press the ⬆ or ⬇ keys to increment or decrement to correct height.
8. Press the "↵" key. The display will change to show the BMI (Body Mass Index).
9. Read and record user's BMI.
10. Press the "↵" key once more and the scale returns to user's weight.

NOTE: While the user is still standing on the scale, pressing the "↵" key will toggle between BMI and weight display.

11. Assist user off scale
12. Once user steps off scale, display automatically returns to weight only mode.
13. To turn scale off, press the "⏻" key.
    If the Automatic Shutdown feature has been enabled, the scale will turn off after a predefined time of inactivity (no motion or weight on scale).

Height Rod Operation

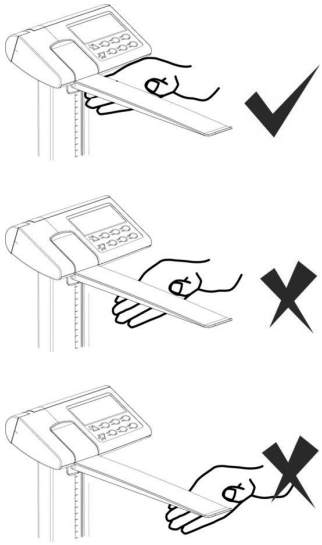

1. Lift headpiece on height rod to horizontal position.
2. Referring to the illustration to the right, lift headpiece and raise it well above estimated height of user's head.
3. Assist user onto scale.
4. Carefully lower inner height rod (press down against height rod display cover while keeping headpiece horizontal) until headpiece rests on top of user's head.
5. If user is shorter than 47" (120 cm), push height rod display cover down flush with display and then push headpiece down until it rests on top of user's head.
6. Read height of user as follows:
   If user is shorter than 47" (120 cm), the correct height is read at the red edge on the bottom of the headpiece.
   If user is 47" (120 cm) or taller, the correct height is read at the red edge on the outer column.

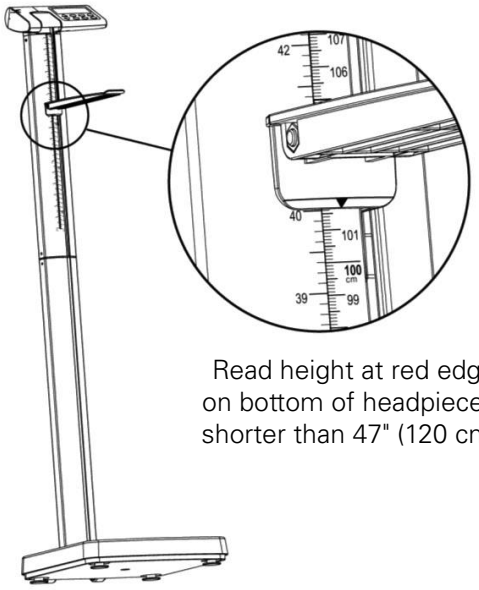

Read height at red edge on bottom of headpiece if shorter than 47" (120 cm).

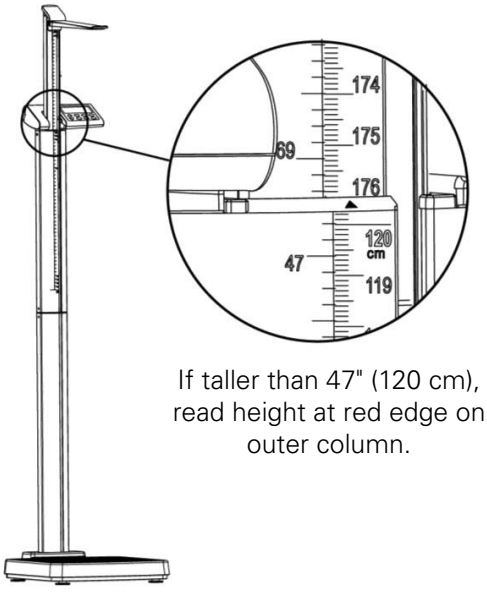

If taller than 47" (120 cm), read height at red edge on outer column.

7. Referring to the illustration above, lift headpiece (while keeping it horizontal) and raise it above user's head.
8. Assist user off scale.
9. Lower headpiece back to vertical position and return height rod to the "stored" position (headpiece should be vertical against outer column and height rod display cover should be flush with the display).

Setup

Your Attendant Bluetooth Column Scale has been pre-configured at the factory and should not require changes for use in most applications. However, if the factory settings do not meet the requirements of your operation, or if recalibration is necessary the following describes the setup process for your scale.

To Enter Setup

1. With the scale off, press hold the "→0←" key and then press the "⏻" key to turn on the scale.
2. The display will turn on all digits, show the software version for a few seconds and then change to show ***nin:00***.
3. Release all keys.
4. The scale is now ready for setup.

NOTE: If OneWeigh is enabled (***onE=1***), the prompt for the **Unit** setting will be bypassed and the display will show the prompt for the ***nin*** (minutes) setting. Otherwise, the display will show the prompt for the **Unit** setting

⚠ **IMPORTANT:** When a prompt and value displayed are acceptable, press the "↵" key to save the setting and proceed to the next prompt. To change a setting, press the ⬆ or ⬇ keys to adjust the setting (or select a new value) and then press the "↵" key to save the new setting and advance to the next prompt.

Unit **(Weighing Unit)**
The display will show ***Unit***, and flash the annunciator (kg) or (lb) for the current unit setting. If the displayed setting is acceptable, press the "↵" key to save it and proceed to the next prompt.

Otherwise, use the ⬆ or ⬇ keys to change the weighing unit and then press the "↵" key to save it and proceed to the next prompt.

NOTE: Once the unit is selected, it will be kept even after the batteries are replaced.

ONE = **(OneWeigh)**
The display will show ***ONE=0*** with the 0 blinking to indicate the OneWeigh setting is disabled. If it is desired to keep the ability to change the unit setting available, press the "↵" key to save it, and proceed to the next prompt.

Otherwise, if it is desired to lock the selected unit setting permanently, press the ⬆ or ⬇ keys to select ***ONE=1*** (with the 1 blinking to indicate the OneWeigh setting is enabled), and then press the "↵" key to save it and proceed to the next prompt.

OneWeigh Feature is Disabled

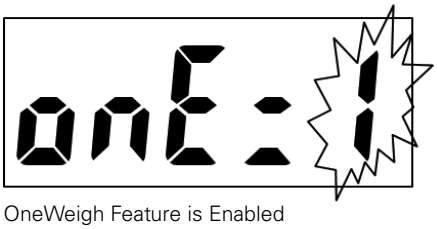

OneWeigh Feature is Enabled

⚠ **IMPORTANT:** Once the OneWeigh feature is enabled, the ***Unit*** setting prompt will be bypassed, and setup will proceed to the next prompt, ***Nin:*** (Minutes).

Nin: **(Minutes)**
The display will show ***nin:00***, the current Minutes setting. If value displayed is acceptable, press the "↵" key to save it and proceed to the next prompt. Otherwise, press the ⬆ or ⬇ keys to select a new value from 00 to 59 and then press the "↵" key to save it and proceed to the next prompt.

NOTE: The default minute setting is 00.

***hh:* (Hours)**
The display will show ***hh:00***, the current Hours setting. If value displayed is acceptable, press the "↵" key to save it and proceed to the next prompt. Otherwise, press the ⬆ or ⬇ keys to select a new value from 00 to 23 and then press the "↵" key to save it and proceed to the next prompt.

⚠ **IMPORTANT!** Time is entered in a 24-hour format. When entering times after noon (12:00 PM), you must add 12 to time. For example, 3:00 PM would be entered as 15:00.

NOTE: The default hour setting is 00 (mid-night).

***yy:* (Years)**
The display will show ***YY:00***, the current Years setting. If value displayed is acceptable, press the "↵" key to save it and proceed to the next prompt. Otherwise, press the ⬆ or ⬇ keys to select a new value from 00 to 99 and then press the "↵" key to save it and proceed to the next prompt. Note that 00 represents year 2000, 01 represents 2001 and so on.

NOTE: The default year setting is 00 (2000).

***nn:* (Months)**
The display will show nn:01, the current Months setting. If value displayed is acceptable, press the "↵" key to save it and proceed to the next prompt. Otherwise, press the ⬆ or ⬇ keys to select a new value from 01 to 12 and then press the "↵" key to save it and proceed to the next prompt. Note that 01 represents January, 02 represents February so on.

NOTE: The default month setting is 01 (January).

***dd:* (Day)**
The display will show ***dd:01***, the current Day setting. If value displayed is acceptable, press the "↵" key to save it and proceed to the next prompt. Otherwise, press the ⬆ or ⬇ keys to select a new value from 01 to 31 and then press the "↵" key to save it and proceed to the next prompt.

NOTE: The default day setting is 01 (first day of month).

***ASH* (Automatic Shutoff)**
The display will show ***ash***__, the current Automatic Shutoff setting. If value displayed is acceptable, press the "↵" key to save it and proceed to the next prompt. Otherwise, press the ⬆ or ⬇ keys to select a new value and then press the "↵" key to save it and proceed to the next prompt. Allowable values are 00 to 09 minutes in 1 minute increments. Note that selecting 00 disables the automatic shutoff feature.

NOTE: The default Automatic Shutoff setting is ASH03 (3 minutes).

***bu;;* (Buzzer Setting)**
In operation mode, if an incorrect key is pressed, the scale will sound two beeps as a warning and the operation will not be processed. The display will show ***bu;;***, the current Buzzer setting. If value displayed is acceptable, press the "↵" key to save it and proceed to the next prompt. Otherwise, press the ⬆ or ⬇ keys to select enable or disable the Buzzer and then press the "↵" key to save it and proceed to the next prompt. Allowable values are 0 (disable) or 1 (enable).

NOTE: The default Buzzer setting is 1 (enable).

Setup Complete

Once the "↵" key has been pressed at the ***bu;;*** prompt, all Setup settings (current or new values) will be saved and the scale will turn off.

Calibration

Your Attendant® Bluetooth Column Scale was calibrated at the factory and should not require adjustment. In the event that the scale should need re-calibration, the following describes the calibration procedure. To maintain the instrument's high degree of accuracy, a qualified technician should perform this function.

To perform calibration, you will need either 400 pounds or 200 kilograms of certified test weights, depending on the weighing unit (kilograms or pounds) of your scale. It is recommended to use eight (8) single 50-pound or 25-kilogram test weights for calibration.

To Enter Calibration

1. With the scale off, press and hold the "↵" and "→0←" keys and then press the "⏻" key to turn on the scale.
2. The display will turn on and show ***SEtGC***
3. Release all keys.
4. The scale is now ready for calibration.

⚠ **IMPORTANT!** When a prompt and value displayed are acceptable, press the "↵" key to save the setting and proceed to the next prompt. To change a setting, press the ⬆ or ⬇ keys to adjust the setting (or select a new value) and then press the "↵" key to save the new setting and advance to the next prompt.

Changing the Weighing Unit *(if needed)*

1. To change the weighing unit, ensure OneWeigh is disabled, and then turn the scale off.
2. Press and hold the "→0←" key and then press the "⏻" key to turn the scale on.
3. The scale will enter setup mode with the display showing ***UNIT***, and flash the **lb** or **kg** annunciator for the current setting.
4. Release all the keys.
5. Use the ⬆ or ⬇ keys to change the weighing unit to **lb** or **kg** (to match your test weights), and then press the "↵" key.
6. Press the "↵" key repeatedly until the scale automatically turns off.
7. The scale is now ready to enter calibration.

***SEtGC* (Set Calibrated Gravity Constant)**
This setting (e.g., 9787) is the acceleration of gravity constant value for the location where the scale was calibrated.

With the display showing ***SETGC***, press the "↵" key to show current setting. If the value displayed is acceptable, press the "↵" key and proceed to the next prompt. Otherwise, press the ⬆ or ⬇ keys to adjust the setting then press the "↵" key to save it and proceed to the next prompt.

Allowable values are 9.700 through 9.900.

***CALGC* (SET OPERATED GRAVITY CONSTANT)**
This setting (e.g., ***9813***) is the acceleration of gravity constant value for the location where the scale will be operated.

With the display showing ***CALGC***, press the "↵" key to show current setting. If the value displayed is acceptable, press the "↵" key and proceed to the next prompt. Otherwise, press the ⬆ or ⬇ keys to adjust the setting then press the "↵" key to save it and proceed to the next prompt.

Allowable values are 9.700 through 9.900.

***CALn* (Calibrate Scale)**

Step 1. The display will change to show CALn.

Step 2. To skip calibration and save the previous settings, press the "↵" key to exit calibration. The scale will turn off automatically. Proceed to Step 14.

Step 3. Otherwise, press the ⬆ or ⬇ keys to select ***y*** (Y = start calibration). Note that you can still select ***n*** (n = exit calibration), skip calibration and turn the scale off.

Step 4. Press the "↵" key.

Step 5. The display will change to show the internal count.

Step 6. Make certain the scale platform is empty and free of debris.

Step 7. Press the "↵" key to save the zero reference point.

Step 8. The display will change to show the first calibration point ***100 kg*** or ***200 lb***

Step 9. Place the first calibrated test weight on the scale platform.

Step 10. When reading is stable, the first weight reading will be saved and the display will change to show the second calibration point ***200 kg*** or ***400 lb.***

Step 11. Place the next calibrated test weight on the scale platform.

Step 12. When reading is stable, the second weight reading will be saved.

Step 13. The display will change to show ***PASS*** and then automatically shut the scale off.

Step 14. The scale is now ready for operation.

Data Transmission Format

The USB port on the Attendant® Bluetooth Column Scale is a bi-directional port and can receive and transmit data. It can be used to communicate to a computer by to pressing the " " key or transmitting a command to the scale.

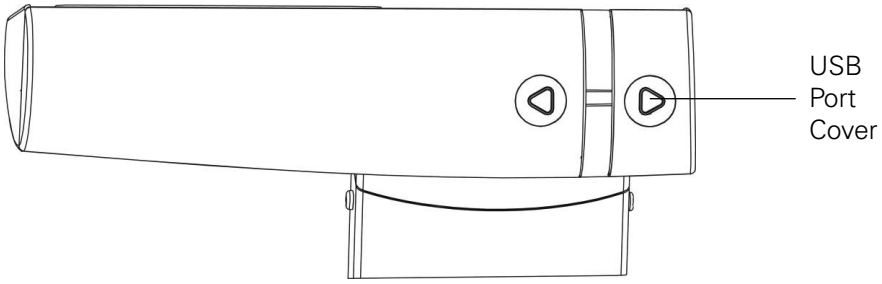

To connect to a computer or other USB device, you will need a USB Type B cable to plug into the USB port located under the small cover on the back of the display.

Output Format

The format below represents the output directly to a computer for processing of data and includes commas between each field and a carriage return to terminate the record.

Time, Date, Mother BMI, Height, Mother Weight, Baby Weight <CR>

12:00,12/01/20, 21.5, 5'03.0",132.3lb,12.5lb

Remote Print Command

The host device (computer) can send the following command to get data from the scale.

<LF> P <CR>

This command is equivalent to pressing the " " key. The scale will respond by sending the above Output Format to the computer.

Bluetooth Low Energy (BLE)

Your Attendant® Bluetooth Column Scale has a wireless transmitter inside the weight display enclosure that can be configured for Bluetooth Low Energy (BLE).

Features Available via BLE

Device Information Service
- Manufacturer Name
- Model Number
- Software Revision

Battery Service
- Battery Level Percentage

Weight Scale Service
- Weight Measurement
- Weight Scale Feature

Bluetooth Pairing

Bluetooth capability on the Attendant® Column Scale is always active.

To pair a Bluetooth-capable device with the scale, select the name of the scale from the list of available connections: Solo Scale XXXX. XXXX represent the last four digits of the scale's serial number.

When the scale is connected to an app, the icon will be on. Otherwise, the icon will blink while attempting to make a connection.

NOTE: The BLE function will be turned off when the USB port is used to connect to a PC.

When a stable weight reading is achieved, and if the scale is paired with a Bluetooth capable device, the reading will transmit to the device continuously.

Display Messages

The Attendant® Bluetooth Column Scale is equipped with software that tests various portions of the scale's circuitry and verifies proper operation. Should a problem be detected, a message will be displayed alerting the operator to that condition. The following lists the messages displayed and their meaning:

DISPLAY	MEANING
Err0	This will be displayed for a few seconds when the scale cannot establish zero and then turn the scale off. Refer to the TROUBLESHOOTING section.
LoBAt	Displayed when the batteries are near the point they need to be replaced.
OCAP	Weight on scale exceeds 570 lb. (260 kg).

Troubleshooting

Before calling for service assistance, you should make some initial checks to verify that a problem does exist. The following describes several types of symptoms along with suggested remedies.

PROBLEM	POSSIBLE SOLUTIONS
Display does not turn on	Battery Operation: • Check if batteries are installed and correctly. • Are batteries discharged? Remove old batteries and replace with new ones. AC Operation: • Is 9V AC/DC power adapter fully inserted into wall receptacle? • Check wall receptacle for proper AC power. Try another electrical appliance in same receptacle; does it work? • Check circuit breaker. • Has there been power failure?
Incorrect weight displayed	Ensure that the scale platform isn't touching an adjacent object. Have proper operation procedures been followed?
Display shows ***Err0*** and shuts off	If platform is not empty (user is on scale) when powering up, display will show ***Err0*** and turn off. Remove any weight from platform (have user step off scale) and power up the scale again. If scale continues to show ***Err0*** and turn off, consult your scale service representative.
Display shows a moving small ***o***	If the display shows a moving small o when powering up, ensure the scale is stable and wait for a moment until the display shows ***0.0***. If scale continues to show a moving small ***o***, please consult your scale service representative.

Care and Cleaning

- DO NOT submerge scale in water, pour or spray water directly on the display.
- DO NOT use acetone, thinner or other volatile solvents for cleaning.
- DO NOT expose scale to temperature extremes.
- DO NOT place scale in front of heating/cooling vents.
- DO clean the scale and display with a damp soft cloth and mild nonabrasive detergent.
- DO remove power before cleaning with a damp cloth.
- DO provide clean AC power and adequate protection against lightning damage.
- DO keep the surroundings clear to provide clean and adequate air circulation.

Limited Warranty

We offer to you, as the original purchaser, a warranty for the Attendant® Bluetooth Column Scale. Our warranty applies for the limited warranty period stated below. If any device or device part listed below is defective in material or workmanship during the applicable limited warranty period, we will repair or replace it at our cost. Please note that the decision to repair or replace a device or device part will be at our discretion. Our warranty applies only if the device is properly maintained by the original purchaser for normal, indoor use and does not cover normal wear and tear, modification of the device, or damage caused by abuse, improper use, failure to maintain, use which exceeds the published device limitations, or the combination of any device with another product. In addition, our warranty does not cover fading, characteristics or natural variations in fabric, texture, colorfastness, stains, spills, or exposure to chemicals, odors, heat or light. In certain cases, we may provide you repair or adjustment instructions and/or replacement parts, and ask you to perform a repair or adjustment or replace a defective part.

Our warranty gives you specific legal rights, and you may also have other rights, which vary from state to state. Please note that our limited warranty period begins when we ship the device to you. The limited warranty period and our obligations under the warranty end once you transfer the device to someone else, or at the end of the applicable limited warranty period identified below, whichever is earlier.

Product/Part:	**Warranty Period (Parts):**	**Anticipated Usable Device Life:**
Attendant® Bluetooth Column Scale	1 year	1 year

Anticipated Usable Device Life is based on normal use with proper maintenance, cleaning and storage. You should still inspect, monitor and care for the device as described in this guide, as the device may need to be replaced sooner than anticipated in particular situations.

DIRECT SUPPLY MANUFACTURING, INC. MAKES NO IMPLIED WARRANTIES OF MERCHANTABILITY OR FITNESS FOR A PARTICULAR PURPOSE; THESE AND ALL OTHER IMPLIED WARRANTIES ARE SPECIFICALLY DISCLAIMED. DIRECT SUPPLY MANUFACTURING, INC. WILL NOT BE LIABLE FOR CONSEQUENTIAL OR INCIDENTAL DAMAGES THAT MAY RESULT FROM THE DEVICE OR YOUR USE OF OR INABILITY TO USE THE DEVICE. TO THE EXTENT ALLOWED BY LAW, OUR TOTAL LIABILITY TO YOU, IF ANY, IS LIMITED TO THE PRICE OF THE DEVICE OR SERVICE GIVING RISE TO YOUR CLAIM. Some states do not allow an exclusion or limitation of incidental or consequential damages or how long an implied warranty lasts, so the above limitations or exclusions may not apply to you. If implied warranties are not excluded, and to the extent allowed by law, we limit any and all implied warranties to the applicable warranty period identified above. Except for rights under any applicable state law, the remedies provided under this warranty are your sole and exclusive remedy for any breach of our warranty and state the entire limit of our responsibilities.

Customer Service

If you have any questions about the Attendant® Bluetooth Column Scale you have purchased or would like to request warranty service, please contact your distributor.

DirectSupply.com

APTURA / EQUIPMENT & FURNISHINGS / DSSI / TELS

Distributed by Direct Supply Manufacturing, Inc. 6635 W Champions Way, Milwaukee, WI 53223.

© 2021 Direct Supply Manufacturing, Inc. All Rights Reserved. Direct Supply®, Attendant®, and all associated logos are the registered trademarks of Direct Supply, Inc., used under license.

Date of Printing: January 2021 16065

Warnings

Due to the used enclosure material, the product shall only be connected to a USB Interface of version 2.0 or higher. The connection to so called power USB is prohibited.

Do not use the device in the environment at too high or too low temperature, never expose the device under strong sunshine or too wet environment. The suitable temperature for the product and accessories is 0℃- 40℃.

Caution risk of explosion if battery is replaced by an incorrect type. Dispose of used batteries according to the instructions.

Hereby,CARDINAL SCALE MANUFACTURING CO. declares that this device is in compliance with the essential requirements and other relevant provisions of Directive 2014/53/EU.
For the declaration of conformity, visit the Web site http://www.cardet.com/certification

Operating frequency:2402MHz-2480MHz

Federal Communication Commission Interference Statement

This device complies with Part 15 of the FCC Rules. Operation is subject to the following two conditions: (1) This device may not cause harmful interference, and (2) this device must accept any interference received, including interference that may cause undesired operation.
This equipment has been tested and found to comply with the limits for a Class B digital device, pursuant to Part 15 of the FCC Rules. These limits are designed to provide reasonable protection against harmful interference in a residential installation. This equipment generates, uses and can radiate radio frequency energy and, if not installed and used in accordance with the instructions, may cause harmful interference to radio communications. However, there is no guarantee that interference will not occur in a particular installation. If this equipment does cause harmful interference to radio or television reception, which can be determined by turning the equipment off and on, the user is encouraged to try to correct the interference by one of the following measures:

-Reorient or relocate the receiving antenna.
-Increase the separation between the equipment and receiver.
-Connect the equipment into an outlet on a circuit different from that to which the receiver is connected.
-Consult the dealer or an experienced radio/TV technician for help.

FCC Caution: Any changes or modifications not expressly approved by the party responsible for compliance could void the user's authority to operate this equipment.

This transmitter must not be co-located or operating in conjunction with any other antenna or transmitter.

Radiation Exposure Statement:
This device meets the government’s requirements for exposure to radio waves.
This device is designed and manufactured not to exceed the emission limits for exposure to radio frequency (RF) energy set by the Federal Communications Commission of the U.S. Government.