User manual

Terra AC

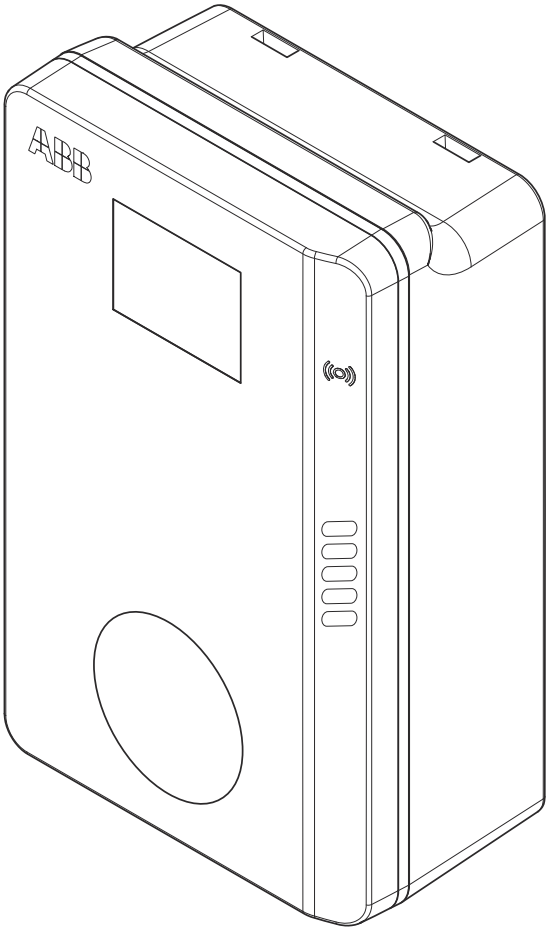

© Copyright ABB. All rights reserved - DRAFT

Copyright

All rights to copyrights, registered trademarks, and trademarks reside with their respective owners.
Copyright ® ABB EV Infrastructure. All rights reserved.

Contents

1 About this document ... 6

1.1 Function of this document ... 6
1.2 Target group ... 6
1.3 Revision history ... 6
1.4 Language ... 6
1.5 Illustrations ... 6
1.6 Units of measurement ... 6
1.7 Typographical conventions ... 7
1.8 How to use this document ... 7
1.9 General symbols and signal words ... 7
1.10 Special symbols for warnings and dangers ... 8
1.11 Related documents ... 8
1.12 Manufacturer and contact data ... 9
1.13 Abbreviations ... 9
1.14 Terminology ... 9
1.15 Orientation agreements ... 10

2 Description ... 11

2.1 Short description ... 11
2.2 Intended use ... 11
2.3 Type plate (Europe) ... 11
2.4 Type plate (North America, Terra AC Wx-P8-xxxxx) ... 12
2.5 Overview ... 13
2.5.1 Overview of the system ... 13
2.5.2 Overview of the EVSE, outside ... 14
2.5.3 Overview of the EVSE, inside ... 15
2.6 Options ... 16
2.6.1 Display ... 16
2.6.2 EV charge cable, Type 2 ... 16
2.6.3 Socket, Type 2 ... 16
2.6.4 EV charge cable, Type 1 (North America, Terra AC Wx-P8-xxxxx) ... 17
2.6.5 Load management ... 17
2.7 Control elements ... 18
2.7.1 LED indicators ... 18
2.8 Description of the mobile app for the EVSE ... 19
2.8.1 General description of the lay-out of the mobile app ... 20
2.8.2 General description of the buttons and colors ... 20
2.8.3 Overview of the menus ... 21
2.8.4 Overview of the error codes (Europe) ... 22
2.8.5 Overview of the error codes (North America, Terra AC Wx-P8-xxxxx) ... 22

2.9 Description of the display screens (option) 23
2.9.1 Booting screen 23
2.9.2 Standby/Idle screen 23
2.9.3 Authorization screen 23
2.9.4 Preparing to charge screen 24
2.9.5 Charging screen 24
2.9.6 Charging completed screen 25
2.9.7 Fault detected screen 25

3 Safety 27
3.1 Liability 27
3.2 Responsibilities for the owner 27
3.3 Personal protective equipment 28
3.4 FCC compliance statement 28
3.5 Industry Canada compliance statement 28
3.6 General safety instructions 29
3.7 Safety instructions for use 29
3.8 Safety instructions during cleaning or maintenance 29
3.9 Signs on the EVSE 30
3.10 Discard the EVSE or parts of the EVSE 30
3.11 Special safety instructions (North America, Terra AC Wx-P8-xxxxx) 31
3.11.1 Important safety instructions (North America, Terra AC Wx-P8-xxxxx) 31

4 Operation 32
4.1 Prepare before use 32
4.2 Energize the EVSE 32
4.3 Connect the EVSE with the mobile app 32
4.4 Start a charge session 33
4.4.1 EVSE with an EV charge cable 33
4.4.2 EVSE with a socket 33
4.5 Stop a charge session 33
4.5.1 EVSE with an EV charge cable 33
4.5.2 EVSE with a socket 34
4.6 Wrap the EV charge cable around the enclosure 35

5 Maintenance and cleaning 36
5.1 Maintenance schedule 36
5.2 Clean the cabinet 36
5.3 Do a check on the cabinet 37

6 Troubleshooting 38
6.1 Troubleshooting procedure 38

6.2 Troubleshooting table....38
6.3 De-energize the EVSE....40

7 Technical data....41
7.1 EVSE Type....41
7.2 General specifications....42
7.3 Meter specifications for a MID certified EVSE (Europe)....42
7.4 Ambient conditions....42
7.5 Noise level....43
7.6 Dimensions....43
7.6.1 AC input with socket, cable Type 2....43
7.6.2 AC input with EV charge cable....44
7.6.3 Space requirements for installation....44
7.7 AC input specifications....45
7.7.1 General specifications....45
7.7.2 AC input specifications (Europe)....45
7.7.3 AC input specifications (North America, Terra AC Wx-P8-xxxxx)....45
7.8 AC output specifications....46
7.8.1 AC output specifications (Europe)....46
7.8.2 AC output specifications (North America, Terra AC Wx-P8-xxxxx)....46
7.9 Specific power consumption specifications....46
7.10 Cleaning specifications....46

1 About this document

1.1 Function of this document

The document is only applicable for this EVSE (Terra AC), including the variants and options listed in section 7.1.
The document gives the information that is necessary to do these tasks:

- Use the EVSE
- Do basic maintenance tasks

1.2 Target group

The document is intended for the owner of the EVSE.
For a description of the responsibilities of the owner, refer to section 3.2.

1.3 Revision history

Version	Date	Description
001	March 2020	Initial version
002	December 2020	Changes: • Type plate • Layout and description of the mobile app • Chapter 3. • Technical data Added description of the screens of the optional display.

1.4 Language

The original instructions of this document are in English (EN-US). All other language versions are translations of the original instructions.

1.5 Illustrations

It is not always possible to show the configuration of your EVSE. The illustrations in this document show a typical setup. They are for instruction and description only.

1.6 Units of measurement

SI units of measurement (metric system) are used. If necessary, the document shows other units between parentheses () or in separate columns in tables.

1.7 Typographical conventions

The lists and steps in procedures have numbers (123) or letters (abc) if the sequence is important.

1.8 How to use this document

1. Make sure that you know the structure and contents of this document.
2. Read the safety chapter and make sure that you know all the instructions.
3. Do the steps in the procedures fully and in the correct sequence.
4. Keep the document in a safe location that you can easily access. This document is a part of the EVSE.

1.9 General symbols and signal words

Signal word	Description	Symbol
Danger	If you do not obey the instruction, this can cause injury or death.	Refer to section 1.10.
Warning	If you do not obey the instruction, this can cause injury.	Refer to section 1.10.
Caution	If you do not obey the instruction, this can cause damage to the EVSE or to property.	
Note	A note gives more data, to make it easier to do the steps, for example.	
-	Information about the condition of the EVSE before you start the procedure.	
-	Requirements for personnel for a procedure.	
-	General safety instructions for a procedure.	
-	Information about spare parts that are necessary for a procedure.	
-	Information about support equipment that is necessary for a procedure.	
-	Information about supplies (consumables) that are necessary for a procedure.	

Signal word	Description	Symbol
-	Make sure that the power supply to the EVSE is disconnected.	
-	Electrotechnical expertise is required, according to the local rules.	
-	Alternating current supply	

Note: It is possible that not all symbols or signal words are present in this document.

1.10 Special symbols for warnings and dangers

Symbol	Risk type
	General risk
	Hazardous voltage that gives risk of electrocution
	Risk of pinching or crushing of body parts
	Rotating parts that can cause a risk of entrapment

Note: It is possible that not all symbols are present in this document.

1.11 Related documents

Document name	Target group
Product data sheet	All target groups
Installation manual	Qualified installation engineer
User manual	Owner
Declaration of conformity (CE)	All target groups

You can find all related documents here: https://new.abb.com/ev-charging/terra-ac-wallbox.

1.12 Manufacturer and contact data

Manufacturer
ABB EV Infrastructure
Garage Hintzenweg 81
3068 AX, Rotterdam
The Netherlands

Contact data
The local representative of the manufacturer can give you support on the EVSE. You can find the contact data here: https://new.abb.com/

1.13 Abbreviations

Abbreviation	Definition
AC	Alternating current
CAN	Controller area network
CPU	Central processing unit
DC	Direct current
EMC	Electromagnetic compatibility
EV	Electric vehicle
EVSE	Electric vehicle supply equipment
MID	Measuring Instruments Directive
NFC	Near field communication
NoBo	Notified body
OCPP	Open charge point protocol
PE	Protective earth
PPE	Personal protective equipment
RFID	Radio-frequency identification

Note: It is possible that not all abbreviations are present in this document.

1.14 Terminology

Term	Definition
Network operating center of the manufacturer	Facility of the manufacturer to do a remote check on the correct operation of the EVSE
Cabinet	Enclosure of the EVSE, including the components on the inside

Term	Definition
Contractor	Third party that the owner or site operator hires to do engineering, civil and electrical installation work
Grid provider	Company that is responsible for the transport and distribution of electricity
Local rules	All rules that apply to the EVSE during the entire lifecycle of the EVSE. The local rules also include the national laws and regulations.
Open charge point protocol	Open standard for communication with charge stations
Owner	Legal owner of the EVSE
Site operator	Entity that is responsible for the day-to-day control of the EVSE. The site operator does not have to be the owner.
User	Owner of an EV, who uses the EVSE to charge the EV

Note: It is possible that not all terms are present in this document.

1.15 Orientation agreements

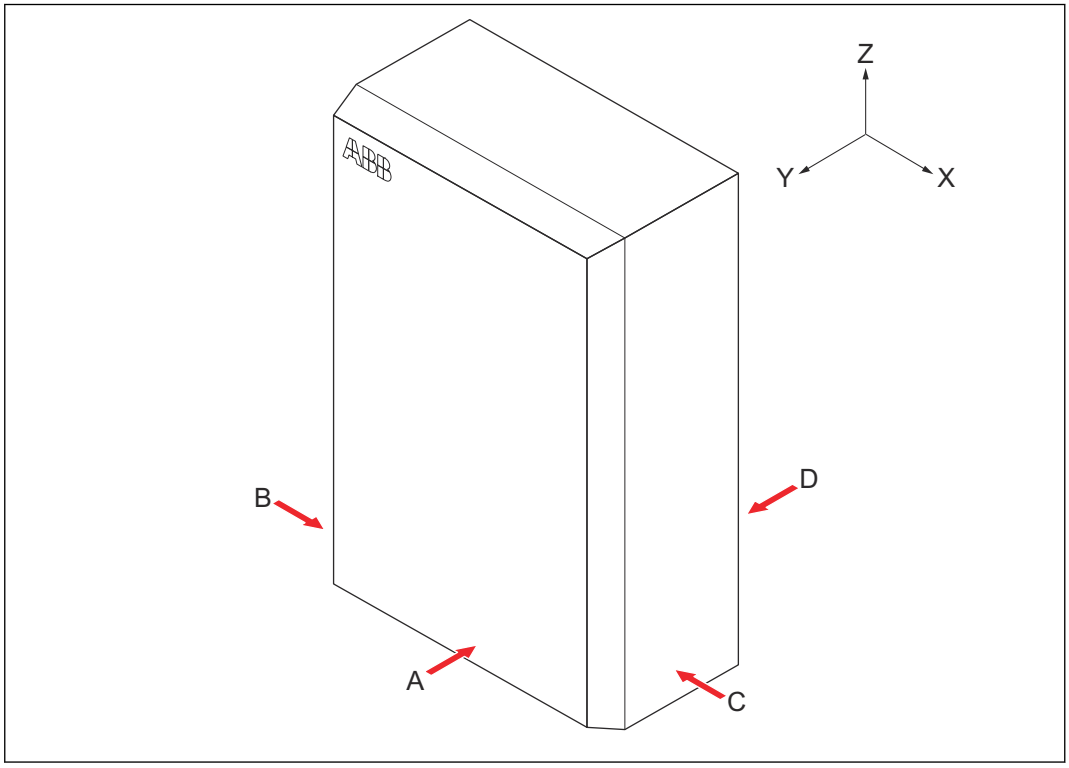

A	Front side: face forward to the EVSE during normal use	X	X-direction (positive is to the right)
B	Left side	Y	Y-direction (positive is rearward)
C	Right side	Z	Z-direction (positive is upward)
D	Rear side		

2 Description

2.1 Short description

The EVSE (Terra AC) is an AC charging station that you can use to supply electricity to an EV. The Terra AC offers tailor-made, intelligent and network charging solutions for your company or home. The EVSE can connect to the internet via GSM, WiFi or LAN.

2.2 Intended use

The EVSE is intended for the AC charging of EVs. The EVSE is intended for indoor or outdoor use.
The technical data of the EVSE must comply with the properties of the electrical grid, the ambient conditions and the EV. Refer to chapter 7.
Only use the EVSE with accessories that the manufacturer provides or that obey the local rules.
The EVSE AC input is intended for a hardwired installation that complies with the applicable national regulations.

Danger:

General risk

- If you use the EVSE in any other way than described in the related documents, you can cause death, injury and damage to property.
- Use the EVSE only as intended.

2.3 Type plate (Europe)

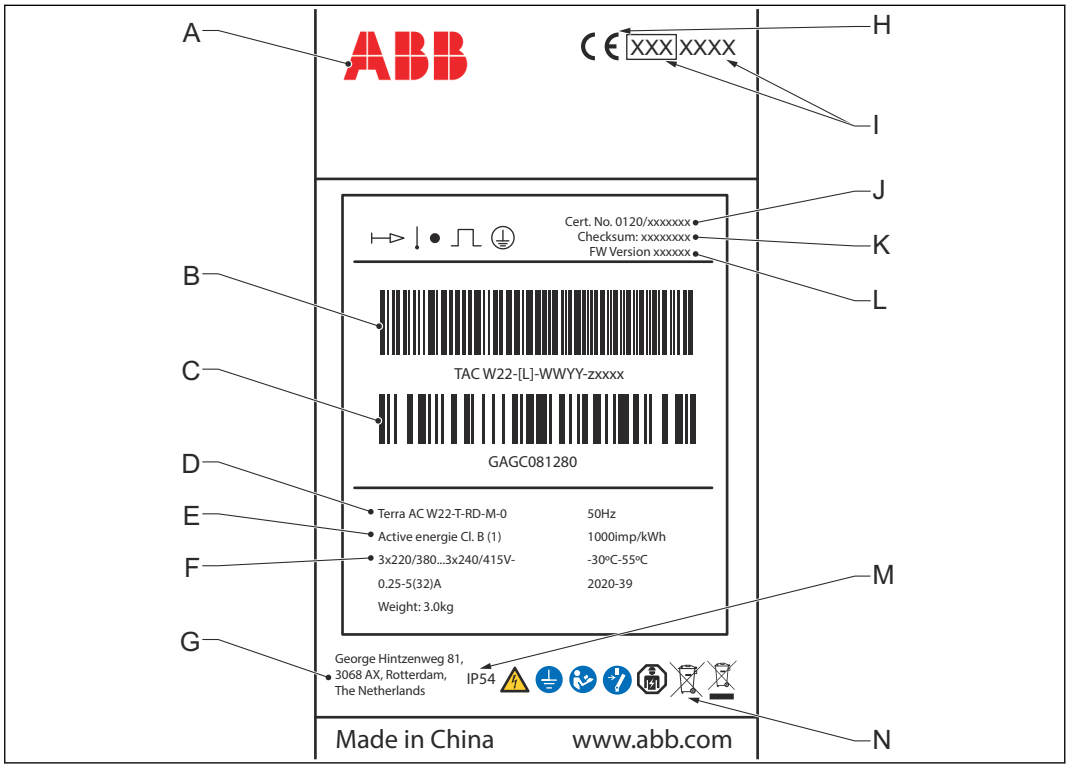

A	Brand	H	CE mark
B	Barcode with the serial number	I	MID mark and notified body number
C	Barcode with the part number of the EVSE	J	MID certiicate number
D	Product model number	K	MID software checksum
E	MID accuracy class	L	MID FW version
F	EVSE rating	M	Ingress protection rating
G	Address of the manufacturer	N	Reference to the manual

Note: The data in the illustration is only an example. Find the type plate on your EVSE to see the applicable data. Refer to section 2.5.2.

2.4 Type plate (North America, Terra AC Wx-P8-xxxxx)

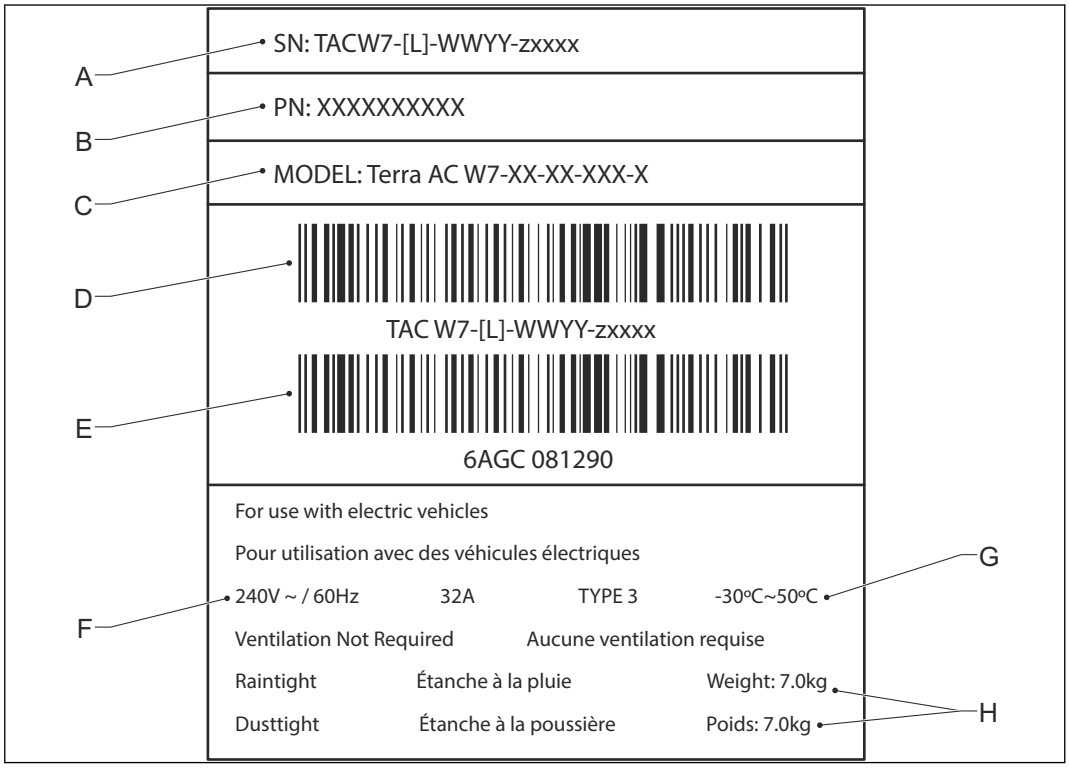

A	Serial number	E	Barcode with the part number of the EVSE
B	Part number of the EVSE	F	Power rating of the EVSE
C	Product model number	G	Ambient temperature
D	Barcode with the serial number of the EVSE	H	Mass of the EVSE

Note: The data in the illustration is only an example. Find the type plate on your EVSE to see the applicable data. Refer to section 2.5.2.

2.5 Overview

2.5.1 Overview of the system

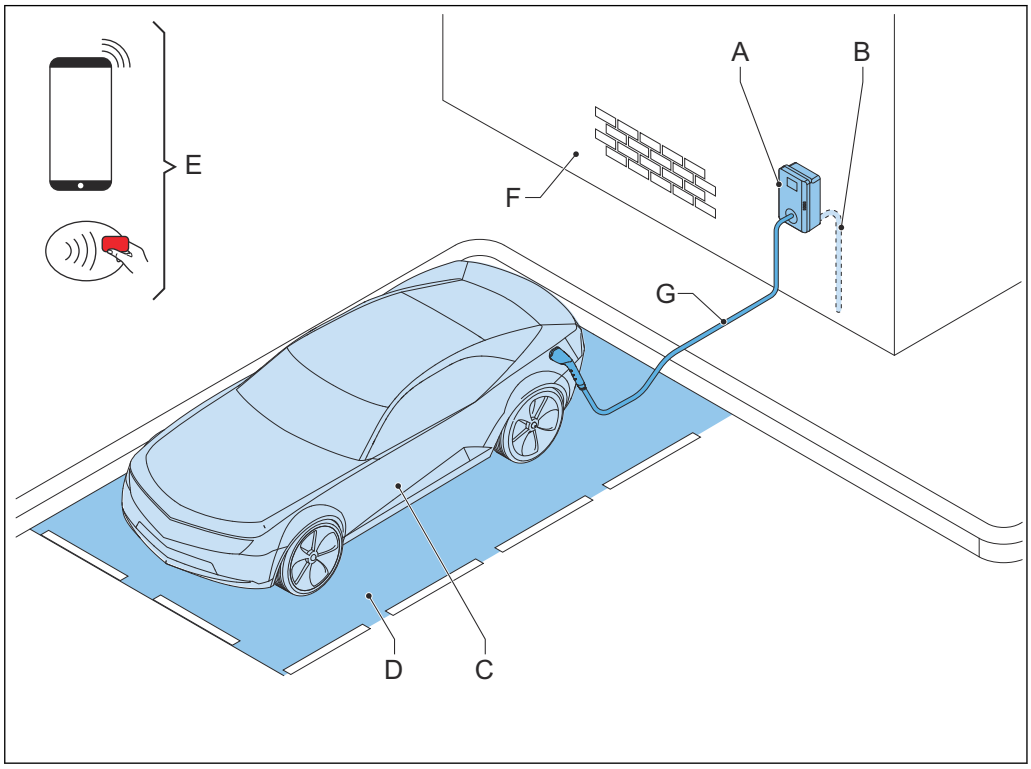

A	EVSE	E	RFID card or smartphone
B	AC grid input	F	Structure to install the EVSE on
C	EV	G	EV charge cable
D	Parking space		

Part	Function
EVSE	Refer to section 2.2.
Structure	To install the EVSE on and to keep the EVSE in position.
AC grid input	To supply the electricity to the EVSE
EV charge cable	To conduct the charge from the EVSE to the EV
EV	The EV of which the batteries need to be charged
Parking space	Location for the EV during the charge session
RFID card or smartphone	To authorize the user to use the EVSE

2.5.2 Overview of the EVSE, outside

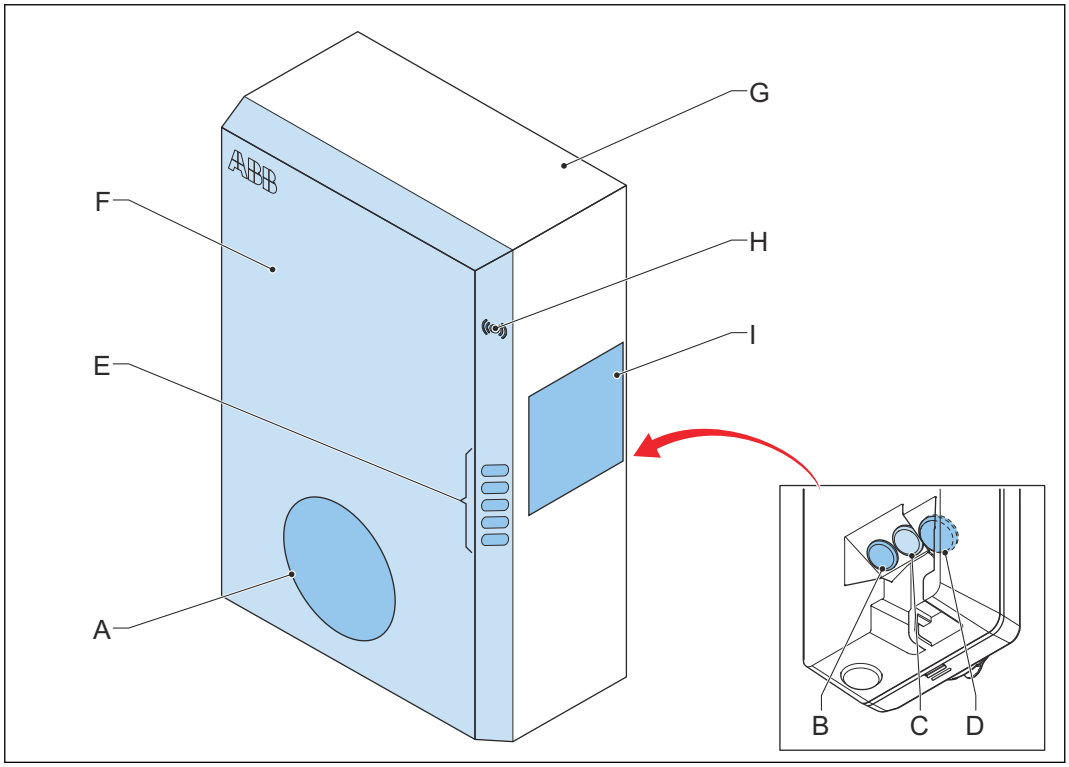

A	Connection for the EV charge cable	F	Cabinet cover
B	Openings for the smart meter connections	G	Enclosure
C	Opening for the Ethernet cable	H	RFID reader
D	Opening for the AC input cable	I	Type plate
E	LED indicators		

Part	Function
Connection for the EV charge cable	To connect the EV charge cable
Openings	Openings for the cables that go into the EVSE
LED indicators	To show the status of the EVSE and the charge session. Refer to section 2.7.1.
Cabinet cover	To prevent a user to access the installation and maintenance parts of the EVSE
Enclosure	To reduce the accessibillity of unqualified persons to the inside of the EVSE
RFID reader	To authorize the start or stop of a charging session with an RFID card
Type plate	To show the identification data of the EVSE. Refer to section 2.3.

2.5.3 Overview of the EVSE, inside

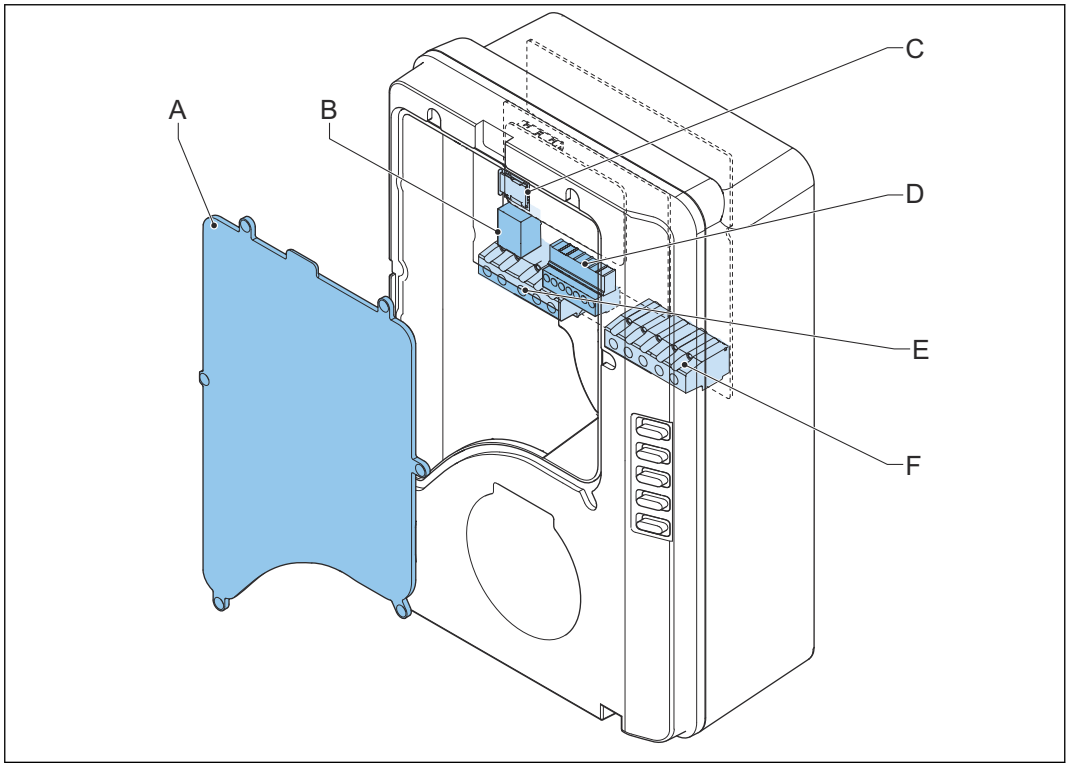

A	Maintenance cover	D	Smart meter connection
B	Ethernet connection	E	Terminal block for the AC input
C	Socket for a Nano-SIM card	F	Terminal block for the EV charge cable or the socket

Part	Function
Maintenance cover	To prevent access to the electrical components of the EVSE
Ethernet connection	To connect the ethernet cable
Socket for a Nano-SIM card	To connect the EVSE to the internet 3G/4G
Smart meter connection	To connect the cables for RS485 and ModBus
Terminal block for the AC input	To connect the AC input cable from the grid
Terminal block for the EV charge cable	To connect the EV charge cable or the socket outlet

2.6 Options

2.6.1 Display

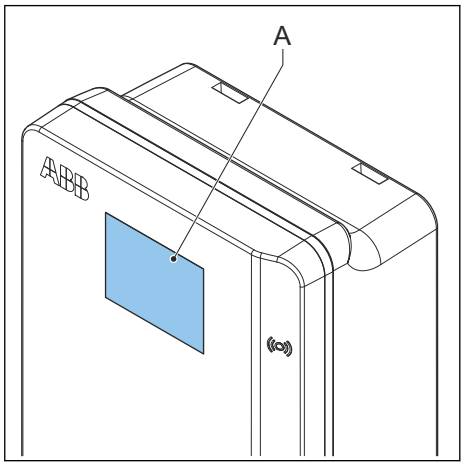

A Display

2.6.2 EV charge cable, Type 2

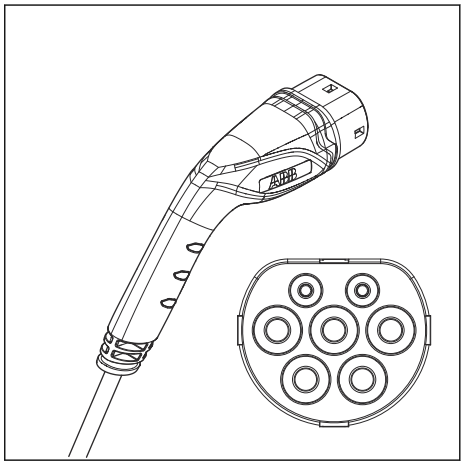

2.6.3 Socket, Type 2

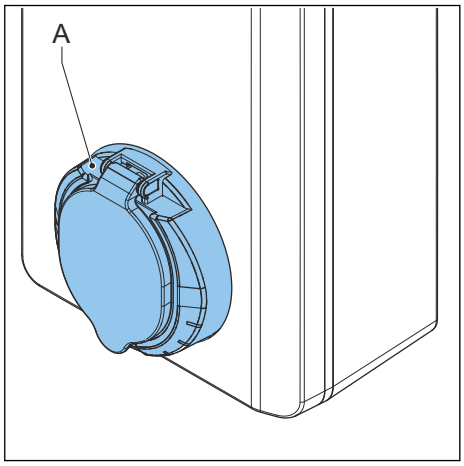

A Socket

The socket for an EV charge cable Type 2 is available with or without a shutter.

2.6.4 EV charge cable, Type 1 (North America, Terra AC Wx-P8-xxxxx)

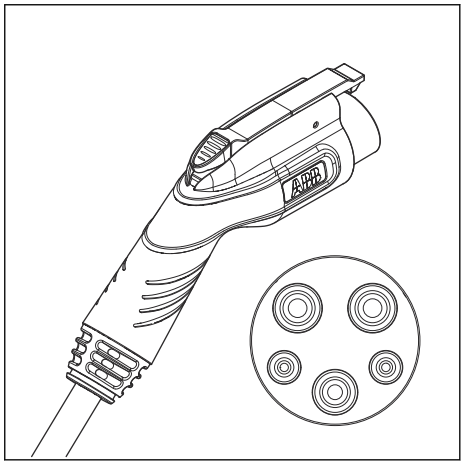

2.6.5 Load management

Load management makes sure that the available capacity of the building or home is not exceeded. A number of devices share a grid connection, that has a maximum capacity. The total power demand of the devices that use the grid connection must not exceed the grid capacity.
The load management feature prevents that the system exceeds the grid capacity and prevents damage of the fuses. At times when the current demand is high, the EVSE decreases the output of current. The current will increase again when there is availability on the grid.
Also, the load management feature makes sure that the available load is optimally shared.

2.7 Control elements

2.7.1 LED indicators

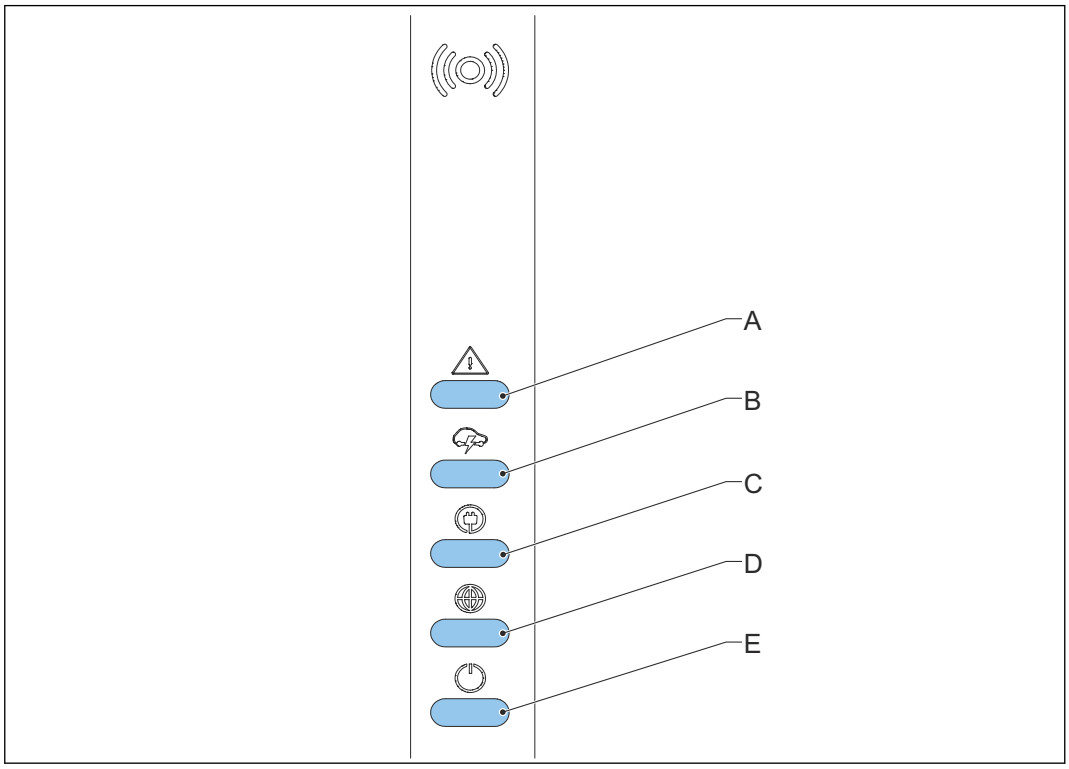

A Error LED
B Charging LED
C Cable and car detection, and car authorization LED
D Internet connection LED
E EVSE on/off LED

Table 1: Error LED

Status of the LED	Status of the EVSE
On	Error
Off	No error

Table 2: Charging LED

Status of the LED	Status of the EVSE
On	EV is fully charged or has stopped charging
Off	Not charging
Flashing	Charging

Table 3: Cable and car detection, and car authorization LED

Status of the LED	Status of the EVSE
On	A car is connected. The connection is autorized.
Off	No car connected
Flashing	A car is connected, waiting for authorization

Table 4: Internet connection LED

Status of the LED	Status of the EVSE
On	Connected to the internet
Off	Not connected to the internet
Flashing	The internet connection is set up.

Table 5: EVSE on/off LED

Status of the LED	Status of the EVSE
On	The EVSE is on
Off	The EVSE is off
Flashing	The EVSE is in setup.

2.8 Description of the mobile app for the EVSE

The mobile app is this app: *ChargeSync APP*. The mobile app is available on the *Apple Store* and on the *Google Play Store*.

2.8.1 General description of the lay-out of the mobile app

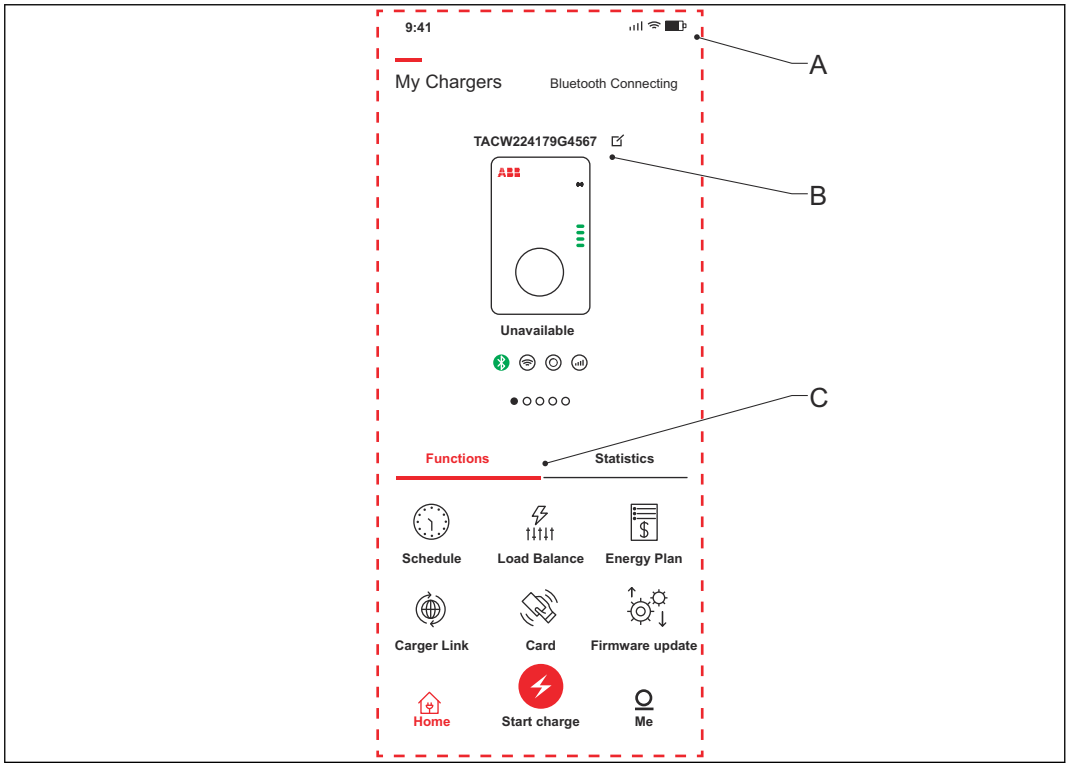

A Menu title
B Main screen area
C Navigation bars

Screen part	Description
Menu title	This area shows the current menu.
Main screen area	This area shows information about the status of the EVSE, the charge sessions and the available menus.
Navigation bars	To navigate through the menus of the app and to use the functions. For a description of the buttons, refer to section 2.8.2.

2.8.2 General description of the buttons and colors

Button	Name / color	Description
	Home	To go to the main menu
	Start button	To start the charge session
	Account button	To go to the account menu, that has the personal preferences and settings

Button	Name / color	Description
	Schedule	To go to the schedule menu
	Energy plan	To go to the energy plan menu
	Load balance	To go to the load balance menu
	Firmware update	To go to the upgrade menu
	Charger link	To go to the charger link menu
	Previous	To go to a previous page
	Next	To go to a next page
	Add card	To add and bind RFID cards

2.8.3 Overview of the menus

Menu	Description
Login menu	Shows the fields to log in.
Account menu	Shows the personal preferences and settings
Setup menu	Shows the screens to set up the EVSE
Main menu	Shows: • Navigation buttons • Buttons to manage the charge session • Information about the current charge session
Schedule menu	To create a schedule for a charge session
Energy plan menu	To select an energy plan for the charge session.
Load balance menu	To adjust the settings for load balance management.
Upgrade menu	To start the software upgrade.

Menu	Description
Charger link menu	To connect the EVSE to the power grid of the site network.
Add card menu	To add and bind RFID cards

2.8.4 Overview of the error codes (Europe)

If the EVSE detects a problem, the error LED comes on. The mobile app shows the error description.

Short description	Description
Overcurrent	There is an overload on the EV side.
Overvoltage	The maximum voltage input from the grid is exceeded.
Undervoltage	The voltage input from the grid is not sufficient.
Internal board to board communication error	The internal boards of the EVSE fail to communicate with each other.
Residual current error (DC 6mA)	There is residual current in the charge circuit. Current leaks into the ground.
Residual current monitor selftest error	The residual current monitoring sensor is defective.
Relay stuck error	The relay contact is overheated or has damage.
Cable under capacity	On the socket version of the EVSE, the rated current capacity of the cable is less than the rated current of the EVSE.
Missing earth error	The EVSE is not earthed correctly.
Overheat	The charging current is too high.
Missing phase	B and C phase are missing or one of these phases is missing.

2.8.5 Overview of the error codes (North America, Terra AC Wx-P8-xxxxx)

If the EVSE detects a problem, the error LED comes on. The mobile app shows the error description.

Short description	Description
Overcurrent	There is an overload on the EV side.
Overvoltage	The maximum voltage input from the grid is exceeded.
Undervoltage	The voltage input from the grid is not sufficient.
Internal board to board communication error	The internal boards of the EVSE fail to communicate with each other.
Residual current error (AC 30mA) CCID (AC 20 mA)	There is residual current in the charge circuit. Current leaks into the ground.
Residual current monitor selftest error	The residual current monitoring sensor is defective.
Relay stuck error	The relay contact is overheated or has damage.
Cable under capacity	On the socket version of the EVSE, the rated current capacity of the cable is less than the rated current of the EVSE.

Short description	Description
Missing earth error	The EVSE is not earthed correctly.
Overheat	The charging current is too high.

2.9 Description of the display screens (option)

2.9.1 Booting screen

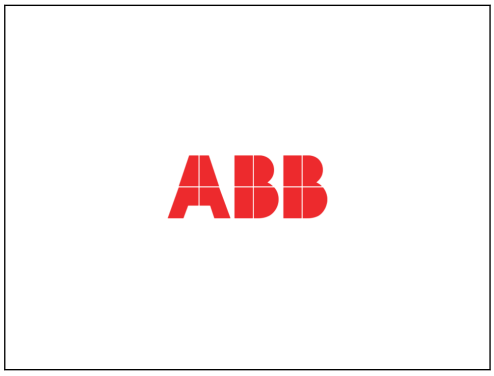

During the start up of the EVSE, the display shows the Booting screen.

2.9.2 Standby/Idle screen

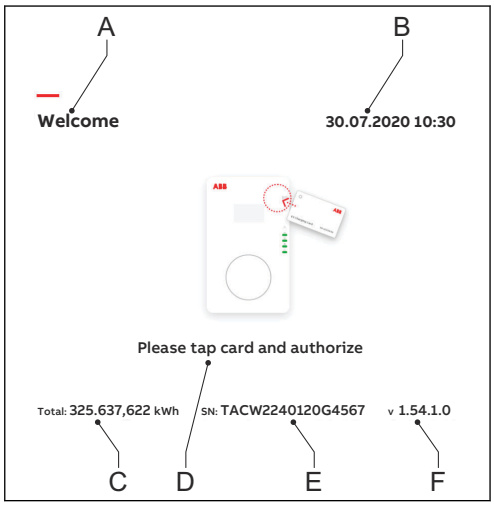

A	Title	D	Guide
B	Date	E	Serial number
C	Total delivered energy	F	Software version

The display shows the Standby/Idle screen when the EVSE is in idle status. Then, the EVSE is available for a charge session.

2.9.3 Authorization screen

The display shows different Authorization screens, dependent on the situation.

The display shows this Authorization screen when the EV charge cable is connected to the EV but the charge session is not authorized:

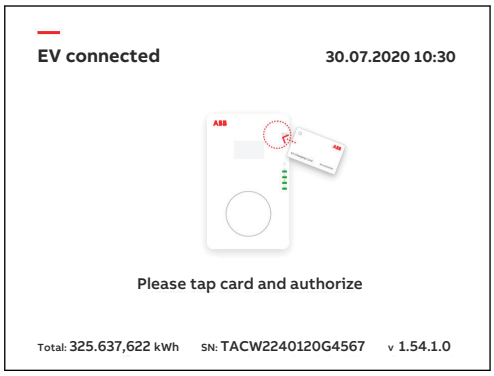

The display shows this Authorization screen when the charge session is authorized but the EV charge cable is not connected to the EV:

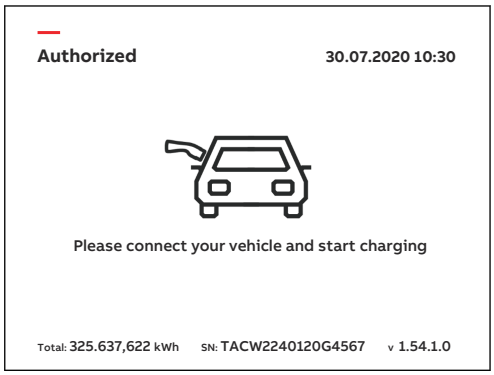

2.9.4 Preparing to charge screen

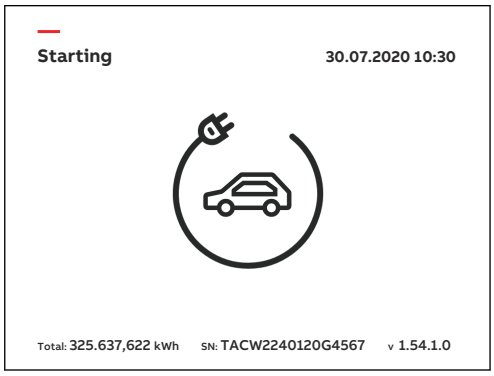

2.9.5 Charging screen

The display shows the Charging screen during the charge session.

The display shows this Charging screen for a single phase EVSE:

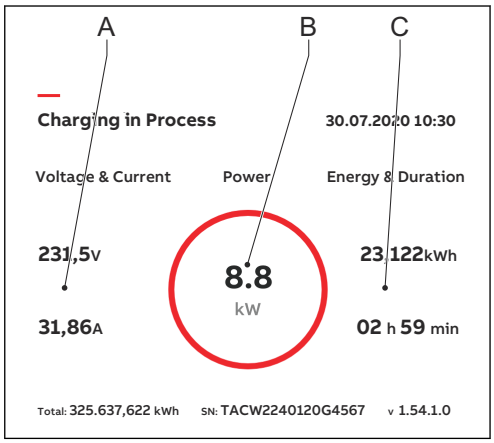

A Real-time voltage and current
B Real-time power
C Energy deliverd and duration of the charge session

The display shows this Charging screen for a 3 phase EVSE:

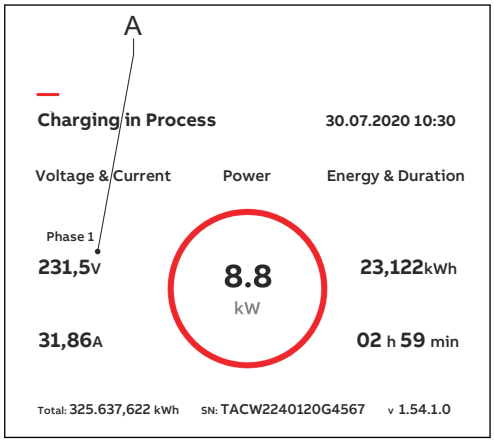

A Real-time voltage and current per phase

2.9.6 Charging completed screen

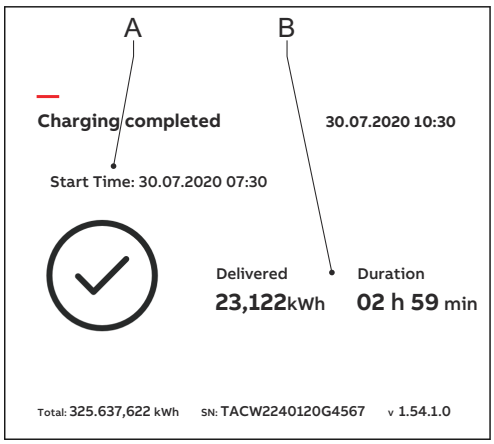

A Start time
B Energy delivered and duration of the charge session

2.9.7 Fault detected screen

The display shows different Fault detected screens, dependent on the type of fault.

Fault Detected 30.07.2020 10:30

Oops. something went wrong.

You can try:

Unplug the connector and plug in again

0x0020

Total: 325.637,622 kWh SN: TACW2240120G4567 v 1.54.1.0

Fault Detected 30.07.2020 10:30

Oops. something went wrong.

Please contact your service provider for further assistance.

0x0010 0x0020 0x0080

Total: 325.637,622 kWh SN: TACW2240120G4567 v 1.54.1.0

Fault Detected 30.07.2020 10:30

Oops. something went wrong.

You can wait for the charger to automatically recover or contact your service provider for further assistance.

0x0010

Total: 325.637,622 kWh SN: TACW2240120G4567 v 1.54.1.0

3 Safety

3.1 Liability

The manufacturer is not liable to the purchaser of the EVSE or to third parties for damages, losses, costs or expenses incurred by the purchaser or third parties if any target group mentioned in the related documents does not obey the rules below:

- Obey the instructions in the related documents. Refer to section #.
- Do not misuse or abuse the EVSE.
- Only make changes to the EVSE, if the manufacturer approves in writing of the changes.

This EVSE is designed to be connected to and to communicate information and data via a network interface. It is the sole responsibility of the owner to provide and continuously ensure a secure connection between the EVSE and the network of the owner or any other network.
The owner shall establish and maintain any appropriate measures (such as - but not limited to - the installation of firewalls, application of authentication measures, encryption of data and installation of anti-virus programs) to protect the EVSE, the network, its system and the interface against any kind of security breaches, unauthorized access, interference, intrusion, leakage and/or theft of data or information.
The manufacturer is not liable for damages and/or losses related to such security breaches, any unauthorized access, interference, intrusion, leakage and/or theft of data or information.

3.2 Responsibilities for the owner

Preliminary requirements

	1.

The owner is the person who runs the EVSE for commercial or business purposes for itself or leaves it to a third party for use. During operation he bears legal responsibility for the protection of the user, other employees or third parties. The owner must obey these instructions:

- Know and implement the local rules.
- Identify the hazards (in terms of a risk assessment), resulting from the working conditions on the site.
- Operate the EVSE with the protective devices installed.
- Make sure that all protective devices are installed after installation or maintenance work.
- Make an emergency plan that instructs people what to do in case of an emergency.
- Make sure that all employees and third parties are qualified to work on high-voltage and high-current electrical installations.
- Make sure that there is sufficient space around the EVSE to safely do maintenance and installation work.

- Identify a site operator who is responsible for the safe operation of the EVSE and for the coordination of all work, if the owner does not do these tasks.

3.3 Personal protective equipment

Symbol	Description
	Protective clothing
	Safety gloves
	Safety shoes
	Safety glasses

3.4 FCC compliance statement

Caution: Changes or modifications not expressly approved by the party responsible for compliance could void the user's authority to operate the EVSE.

Note: This EVSE has been tested and found to comply with the limits for a Class B digital device, pursuant to part 15 of the FCC Rules. These limits are designed to provide reasonable protection against harmful interference in a residential installation. This EVSE generates, uses and can radiate radio frequency energy and, if not installed and used in accordance with the instructions, may cause harmful interference to radio communications. However, there is no guarantee that interference will not occur in a particular installation. If this EVSE does cause harmful interference to radio or television reception, which can be determined by turning the EVSE off and on, the user is encouraged to try to correct the interference by one or more of the following measures:

- Reorient or relocate the receiving antenna.
- Increase the separation between the EVSE and receiver.
- Connect the EVSE into an outlet on a circuit different from that to which the receiver is connected.
- Consult the dealer or an experienced radio/TV technician for help.

3.5 Industry Canada compliance statement

This EVSE contains licence-exempt transmitter(s)/receiver(s) that comply with Innovation, Science and Economic Development Canada’s licence-exempt RSS(s). Operation is subject to the following two conditions:

- This EVSE may not cause interference.
- This EVSE must accept any interference, including interference that may cause undesired operation of the EVSE.

3.6 General safety instructions

- This document, the related documents and the warnings included do not replace your responsibility to use your common sense when you do work on the EVSE.
- Only do the procedures that the related documents show and that you are qualified for.
- Obey the local rules and the instructions in this manual. If the local rules contradict the instructions in this manual, the local rules will apply.

  If and to the extent permitted by law, in case of inconsistency or contradiction, between any requirements or procedure contained in this document and any such local rules, obey the stricter between the requirements and procedures specified in this document and the local rules.

3.7 Safety instructions for use

- In the situations that follow, do not use the EVSE and immediately contact the manufacturer:
  - An enclosure has damage.
  - An EV charge cable or connector has damage.
  - Lightning struck the EVSE.
  - There was an accident or a fire at or near the EVSE.
  - Water has entered the EVSE.

3.8 Safety instructions during cleaning or maintenance

Preliminary requirements

	•

- Keep unauthorized personnel at a safe distance during cleaning or maintenance.
- If for cleaning or maintenance it is necessary to remove safety devices, immediately install the safety devices after the work.
- Put on the correct personal protective equipment. Refer to section 3.3.

3.9 Signs on the EVSE

Symbol	Risk type
	General risk
	Hazardous voltage that gives risk of electrocution
	Risk of pinching or crushing of body parts
	Rotating parts cat can cause a risk of entrapment
	PE
	Sign that means that you must read the manual before you install the EVSE
	Waste from electrical and electronic equipment

Note: It is possible that not all symbols are present on the EVSE.

3.10 Discard the EVSE or parts of the EVSE

Incorrect waste handling can have a negative effect on the environment and human health due to potential hazardous substances. With the correct disposal of this product, you contribute to reuse and recycling of materials and protection of the environment.

- Obey the local rules to discard parts, packaging material or the EVSE.
- Discard electrical and electronic equipment separately in compliance with the WEEE - 2012/19/EU Directive on waste of electrical and electronic equipment.
- As the symbol of the crossed out wheeled-bin on your EVSE indicates, do not mix or dispose the EVSE with your household waste, at the end of use. Instead, hand the EVSE over to your local community waste collection point for recycling.
- For more information, contact the Government Waste-Disposal department in your country.

3.11 Special safety instructions (North America, Terra AC Wx-P8-xxxxx)

3.11.1 Important safety instructions (North America, Terra AC Wx-P8-xxxxx)

Warning: Obey the basic precautions for electric products, including the instructions in this section.

Caution: To reduce the risk of fire, connect this EVSE only to a circuit provided with 40 A maximum branch circuit overcurrent protection in accordance with the National Electrical Code, ANSI/NFPA 70.

- Read all the instructions befor you use this EVSE.
- Make sure that adults supervise this EVSE is when it is used around children.
- Do not put fingers into the EV connector.
- Do not use this product if the flexible power cord or EV charge cable is frayed, has broken insulation, or any other signs of damage.
- Do not use this EVSE if the enclosure or the EV connector is broken, cracked, open, or shows any other indication of damage.
- Install an insulated grounding conductor that is identical in size, insulation material, and thickness to the grounded and ungrounded branch-circuit supply conductors, except that it is green with or without one or more yellow stripes, as part of the branch circuit that supplies the EVSE.
- Connect the grounding connector of the previous bullet point to earth at the EVSE or, when supplied by a separately derived system, at the supply transformer.

4 Operation

4.1 Prepare before use

1. Appoint a site operator and an installation engineer, if these are other persons than you.
2. Make sure that the equipment is installed and commissioned according to the instructions in the installation manual.
3. Make an emergency plan that instructs people what to do in case of an emergency.
4. Make sure that the space around the equipment cannot get blocked. Think of snow or other objects. Refer to the space requirements. Refer to section 7.6.3.
5. Make sure that maintenance is done on the equipment. Refer to section 5.

4.2 Energize the EVSE

1. Close the breaker that supplies the power to the EVSE.

Warning:

Hazardous voltage

- Be careful when you work with electricity.

- The power supply comes on.
- A series of self-checks start, to make sure that the EVSE works correctly and safely.
- If the EVSE detects a problem, the error LED comes on. The mobile app shows the description of the error. For a description of the possible causes and solutions, refer to section 6.

4.3 Connect the EVSE with the mobile app

Preliminary requirements

	• Mobile device with the mobile app

Procedure

1. Find your pin code in the package with the RFID card.
   - The pin code has 8 characters.
   - The letters are case-sensitive.
2. Download the ChargerSync App from the Play Store or App Store.
3. Start the mobile app.
4. Do the instructions that the mobile app shows.

4.4 Start a charge session

4.4.1 EVSE with an EV charge cable

Caution: During the charge session, do not disconnect the EV charge cable from the connection on the EV. There is a risk of damage of the connector of the EV.

Note: The LEDs show the status of the charge session.

1. Take the EV charge cable from the enclosure.
2. Use your RFID card or mobile app to authorize the use of the EVSE.

   The authorization of the connection to the EV starts.
3. Connect the EV charge cable to connector of the EV.

   The EVSE charges the EV.

4.4.2 EVSE with a socket

Caution: During the charge session, do not disconnect the EV charge cable. There is a risk of damage of the socket of the EVSE or the connector of the EV.

Note: The LEDs show the status of the charge session.

1. Connect your EV charge cable to the connection on your EV.
2. Use your RFID card or mobile app to authorize for use of the EVSE.

   The authorization of the connection to the EV starts.
3. Connect the EV charge cable to the socket of the EVSE.

   The EVSE charges the EV.

4.5 Stop a charge session

4.5.1 EVSE with an EV charge cable

Caution: During the charge session, do not disconnect the EV charge cable from the connector on the EV. There is a risk of damage of the connector of the EV.

Note: If you disconnect the EV charge cable during the charge session, the EVSE automatically disconnects the power supply. This stops all charging operations.

1. Select one of the two ways to end the charge session.
   - Wait until the charge session is completed.
     - The mobile app shows that the charge session is completed.
     - The charging LED is on.
     - If your EVSE has a display, the display shows that the charge session is completed.

     When the charge session is completed, the EVSE disconnects the power supply automatically.
   - Authorize the ending of the use of the EVSE with your RFID card or the mobile app.The authorization of the disconnection to the EV starts.
2. Disconnect the EV charge cable from the EV.
3. Wrap the EV charge cable around the enclosure. Refer to section 4.6.

4.5.2 EVSE with a socket

Caution: During the charge session, do not disconnect the EV charge cable. There is a risk of damage of the socket of the EVSE or the connector of the EV.

Note: If you disconnect the EV charge cable during the charge session, the EVSE automatically disconnects the power supply. This stops all charging operations.

1. Select one of the two ways to end the charge session.
   - Wait until the charge session is completed.
     - The mobile app shows that the charge session is completed
     - The charging LED is on.
     - If your EVSE has a display, the display shows that the charge session is completed.

     When the charge session is completed, the EVSE disconnects the power supply automatically.
   - Authorize the ending of the use of the EVSE with your RFID card or the mobile app.The authorization of the disconnection to the EV starts.
2. Disconnect the EV charge cable from the socket of the EVSE.
3. Disconnect the EV charge cable from the connector on the EV.

4.6 Wrap the EV charge cable around the enclosure

1. Wrap the EV charge cable around the enclosure.

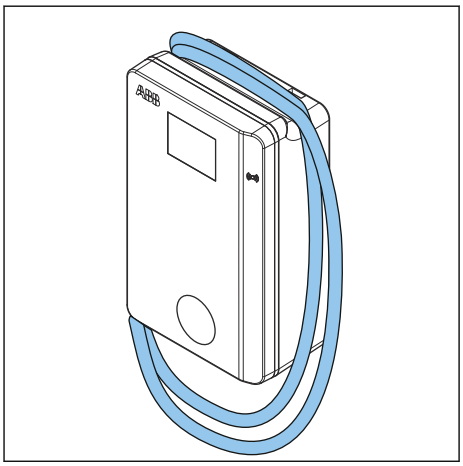

5 Maintenance and cleaning

5.1 Maintenance schedule

Task	Frequency	Procedure
Clean the cabinet cover and the enclosure of the EVSE.	4 months	Refer to section 7.10.
Do a visual check for damage on the cabinet.	Before each use	Refer to section 5.3.
Do a visual check for damage on the EV charge cables or outlet and the connectors.	Before each use	Refer to section 5.3.

5.2 Clean the cabinet

Preliminary requirements

- Cleaning agent. Refer to section 7.10.
- Non-abrasive tool. Refer to section 7.10.

Danger:

Hazardous voltage

- Do not apply high-pressure water jets. Water can leak into the cabinet.

Note: When the EVSE is put in a corrosion sensitive environment, superficial rust is possible on welding points. This rust is only visual. There is no risk for the integrity of the cabinet. The procedure below removes the rust.

Procedure

1. Rinse with low-pressure tap water to remove rough dirt.
2. Apply a a solution of cleaning agent to the cabinet and let it soak.
3. Manually remove dirt. Use the non-abrasive tool.

Caution: Do not use abrasive tools.

4. Rinse with low-pressure tap water.
5. If necessary, apply wax on the front for extra protection and gloss.
6. If there was rust and you want it not to appear again, apply a rust-preventive primer. Ask the manufacturer for specifications and instructions.

5.3 Do a check on the cabinet

1. Do a check for damage on these parts:

Part	Damage
Charge cables, outlets and connectors	Cracks or ruptures
	Internal wires of the cable are visible
Display	Cracks
Coating of the cabinet	Cracks or ruptures

2. If you see damage, contact the manufacturer. Refer to section 1.12.

6 Troubleshooting

6.1 Troubleshooting procedure

1. Try to find a solution for the problem with the aid of the information in this document.
2. If you cannot find a solution for the problem, contact your local representative of the manufacturer. Refer to section 1.12.

6.2 Troubleshooting table

Problem	Possible cause	Possible solution
The current is too high	There is an overload on the EV side	Contact your local representative of the manufacturer or a qualified electrical contractor. Refer to section 1.12.
The AC input voltage is too high or too low	The line and neutral wires are reversed.	Contact your local representative of the manufacturer or a qualified electrical contractor. Refer to section 1.12.
There is a failure in the electrical connections		
The EVSE is overheated	The ambient temperature exceeds the operation temperature specification	The EVSE will decrease the current output. 1. Do a check of the operation temperature on the type plate. 2. If it is necessary, install the EVSE in an environment with a lower ambient temperature. 3. Do the procedure that is described for the problem 'the AC input voltage is too high'. 4. If you can not solve the problem, do not use the EVSE. Contact your local company representative or a qualified electrical contractor.
	AC power supply input voltage is too high	
	Internal charger malfunction	
There seems to be residual current in the charging circuit	The monitoring sensor for residual current has a failure.	If the monitoring sensor for residual current must be replaced, contact your local representative of the manufacturer or a qualified electrical contractor. Refer to section 1.12.

Problem	Possible cause	Possible solution
	There is residual current in the charging circuit.	1. De-energize the EVSE. Refer to section 6.3. 2. Contact your local representative of the manufacturer or a qualified electrical contractor. Refer to section 1.12.
There is a relay contact failure	The relay contact is overheated or defective.	1. Examine the relay contact. 2. If necessary, contact your local representative of the manufacturer or a qualified electrical contractor. Refer to section 1.12.
The AC input lines are reversed.	The rated current capacity of the cable is different from the rated current of the EVSE.	Contact your local representative of the manufacturer or a qualified electrical contractor. Refer to section 1.12.
The error *Missing earth* shows	The EVSE is not earthed correctly.	Contact your local representative of the manufacturer or a qualified electrical contractor. Refer to section 1.12.
There is no internet connection	The internet connectivity between the EVSE and the router is lost.	Connect the EVSE to the internet.
	The RJ45 cable or plug is defective	Contact your local representative of the manufacturer or a qualified electrical contractor. Refer to section 1.12.
	There is no WiFi	Do a check of the WiFi signal strength at the site.
	There is no 3G/4G connectivity	1. Do a check of the Nano-SIM card connections. 2. Do a check of the 3G/4G signal strength at the site.
The EV is not charged	There is a problem with the EVSE	1. Make sure that the power supply to the EVSE is on. 2. Examine the EVSE to find if is working correctly. 3. Examine the mobile app and the charge LED to make sure that the charging session is authorized. 4. Start the charging session.

Problem	Possible cause	Possible solution
	The EV charge cable is defective.	1. Examine the EV charge cable. 2. If the EV charge cable is defective, contact your local representative of the manufacturer or a qualified electrical contractor. Refer to section 1.12.
The car connection or authorization process fails	The EV charge cable is defective.	1. Examine the EV charge cable. 2. If the EV charge cable is defective, contact your local representative of the manufacturer or a qualified electrical contractor. Refer to section 1.12.
	The EV charge cable is not connected correctly.	1. Examine the connection of the EV charge cable. 2. If necessary, contact your local representative of the manufacturer or a qualified electrical contractor. Refer to section 1.12.
	There is a problem with the mobile app or the RFID card.	1. Make sure that you have registered in the mobile app. 2. Make sure that you use a RFID card that the manufacturer provided. 3. Make sure that the RFID card is added on the mobile app. 4. Start the mobile app. 5. Start the authorization process.

6.3 De-energize the EVSE

1. Open the breaker that supplies the power to the EVSE.
2. Wait for minimum 1 minute.

7 Technical data

7.1 EVSE Type

The EVSE type is a code.
The code has 10 parts: A1 - A10.

Code part	Description	Value	Meaning of the value
A1	Brand name	Terra AC	-
A2	Type	W	Wallbox
		C	Column
A3	Power output	4	3.7 kW
		7	7 kW
		9	9 kW
		11	11 kW
		19	19 kW
		22	22 kW
A4	Cable type or socket	P	Type 1 cable
		G	Type 2 cable
		T	Type 2 socket
		S	Type 2 socket with shutter
A5	Cable length	-	No cable
		5	5 m
		8	8 m
A6	Authorization	R	RFID enabled
		-	No RFID
A7	Ethernet	-	Single
		D	Double
A8	Metering	M	Certified for MID (only with display)
		-	Not certified
A9	SIM slot	C	Yes
		-	No
A10	Display	D	Yes
		-	No

Example

Terra AC W7-P8-RD-MCD-0

- A1 = Brand name = Terra AC
- A2 = Type = Wallbox
- A3 = 22, Power output = 22 kW
- A4 = Cable type, socket = Type 2 socket with shutter

- A5 = not applicable for socket version
- A6 = authorization = RFID enabled
- A7 = Ethernet = single
- A8 = metering = not certified
- A9 = SIM slot = applicable
- A10 = display = not applicable
- The '0' is an empty field.

7.2 General specifications

Parameter	Specification
Compliance and safety	• IEC/EN 61851-1 • IEC/EN 62311 • IEC/UL 62479 • IEC/UL 62955 TüV listed conforming to UL 2594, UL 2231-1, UL 2231-2, UL 1998 • CSA C22.2. NO.280
Certification	CE, MID, TüV, Energy Star
IP or NEMA rating	The type plate shows the specification. Refer to section 2.3.
IK rating according to IEC 62262 (enclosure and display)	IK10 IK8+ for an operation temperature between -35 and -30 °C
EMC rating	IEC 61851-21-2, EN 61000-6-1, EN 61000-6-2, EN 61000-6-3, EN 61000-6-4, EN 61000-3-2, EN 61000-3-3, EN 61000-3-11, EN 61000-3-12 CE RED- WLAN / RFID / E-UTRA: EN 300 328 V2.1.1, EN 300 330 V2.1.1, EN 301 908-1 V11.1.2, EN 301 908-13 EN 50470-1, EN 50470-3 FCC Part 15 Class B

7.3 Meter specifications for a MID certified EVSE (Europe)

Parameter in 2014/32/EU directive	Specification
Mechanical environment	M1 Shock and vibrations of low significance
Electromagnetic environment	E2

7.4 Ambient conditions

Parameter	Value
Operation temperature	-35°C to +50°C
Operation temperature for MID certified models	-30°C to +55C
Storage temperature	-40°C to +80°C

Parameter	Value
Storage conditions	Indoor, dry
Relative humidity	<95%, non-condensing

7.5 Noise level

Parameter	Specification
Noise level	Less than 35 dB(A)

7.6 Dimensions

7.6.1 AC input with socket, cable Type 2

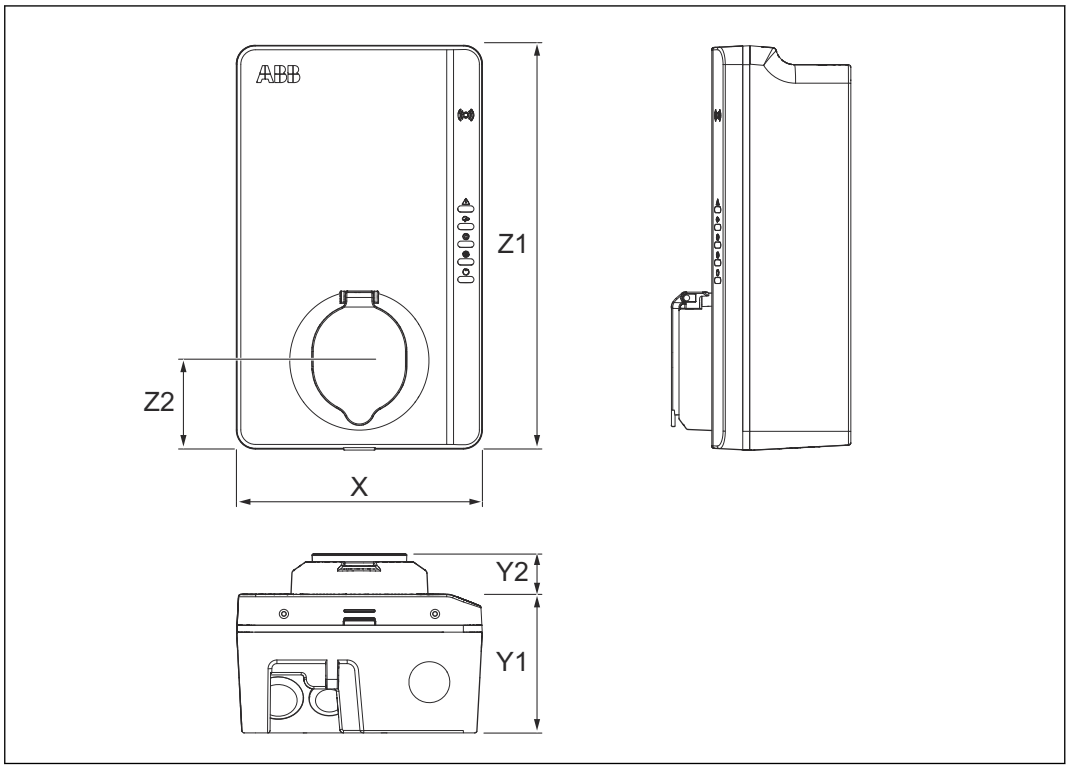

X Width of the EVSE
Y1 Depth of the EVSE
Y2 Depth of the socket
Z1 Height of the EVSE
Z2 Distance from the bottom of the EVSE to the center of the socket.

Parameter	Value [mm]
X	195
Y1	110
Y2	33
Z1	320
Z2	70

7.6.2 AC input with EV charge cable

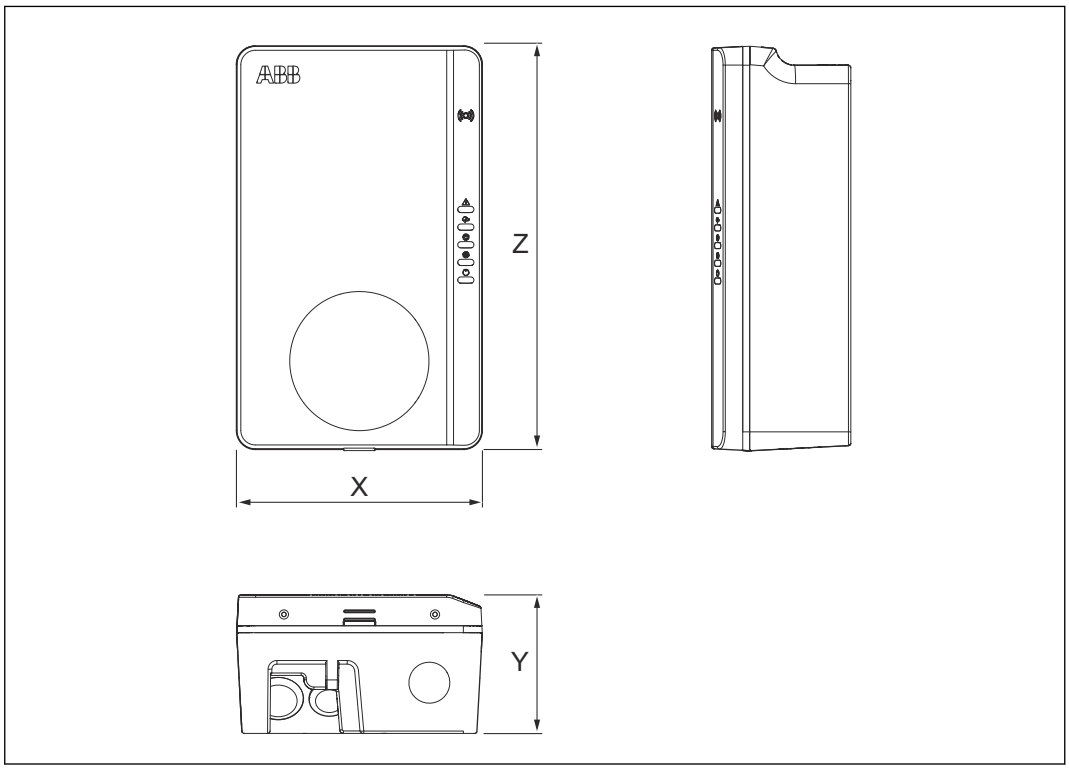

X Width of the EVSE
Y Depth of the EVSE
Z Height of the EVSE

Parameter	Value [mm]
X	195
Y	110
Z	320

7.6.3 Space requirements for installation

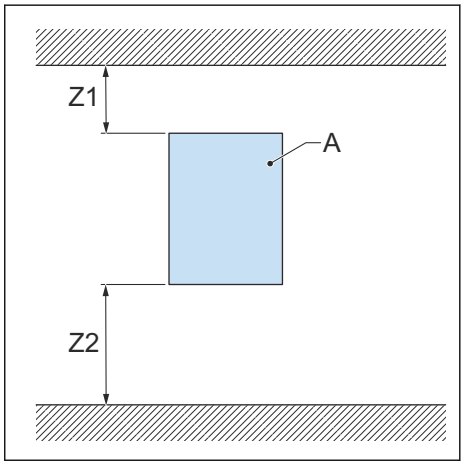

A EVSE

Parameter	Specification [mm]	Specification [inches]
Z1	> 200	> 8
Z2 (indoor use)	450 to 1200	18 to 48
Z2 (outdoor use)	600 to 1200	24 to 48

7.7 AC input specifications

7.7.1 General specifications

Parameter	Specification
Earthing systems	TT
	TN-S
	TN-C-S
Frequency	50 Hz or 60 Hz
Overvoltage category	Category III
Protection	Overcurrent
	Overvoltage
	Undervoltage
	Earth fault, including DC leakage protection[1]
	Integrated surge protection

7.7.2 AC input specifications (Europe)

Parameter	Specification
Input AC power connection	1 phase or 3 phase
Input voltage (1 phase)	220 to 240 VAC
Input voltage (3 phase)	380 to 415 VAC
Standby power consumption	4.6 W
Earth (ground) fault protection	30mA AC, 6 mA DC
Maximum input power (1 phase)	3.7 kW (16 A)
	7.4 kW (32 A)
Maximum input power (3 phase)	11 kW (16 A)
	22 kW (32 A)
	0.25-5 (32) A for MID certified models

7.7.3 AC input specifications (North America, Terra AC Wx-P8-xxxxx)

Parameter	Specification
Input AC power connection	240 V AC
Standby power consumption	3.6 W
Earth (ground) fault protection	internal 20 mA AC CCID

[1] Only for EVSEs in Europe

7.8 AC output specifications

7.8.1 AC output specifications (Europe)

Parameter	Specification
AC output voltage range (1 phase)	220 - 240V AC
AC output voltage range (3 phase)	380 - 415V AC
Connection standard	• Type 1 cable • Type 2 cable • Type 2 socket • Type 2 socket with shutter According to IEC 62196-1, IEC 62196-2
Current for MID certified models	0.25-5(32) A

7.8.2 AC output specifications (North America, Terra AC Wx-P8-xxxxx)

Parameter	Specification
AC output voltage range	110 - 240V AC (1 phase)
Connection standard	Type 1 cable according to SAE J1772

7.9 Specific power consumption specifications

Power consumption in stand-by mode	Specification [W]
1 Phase	4
3 Phase	4

7.10 Cleaning specifications

Parameter	Specification
Cleaning agent	pH value between 6 and 8
Non-abrasive tool	Non-woven nylon hand pad