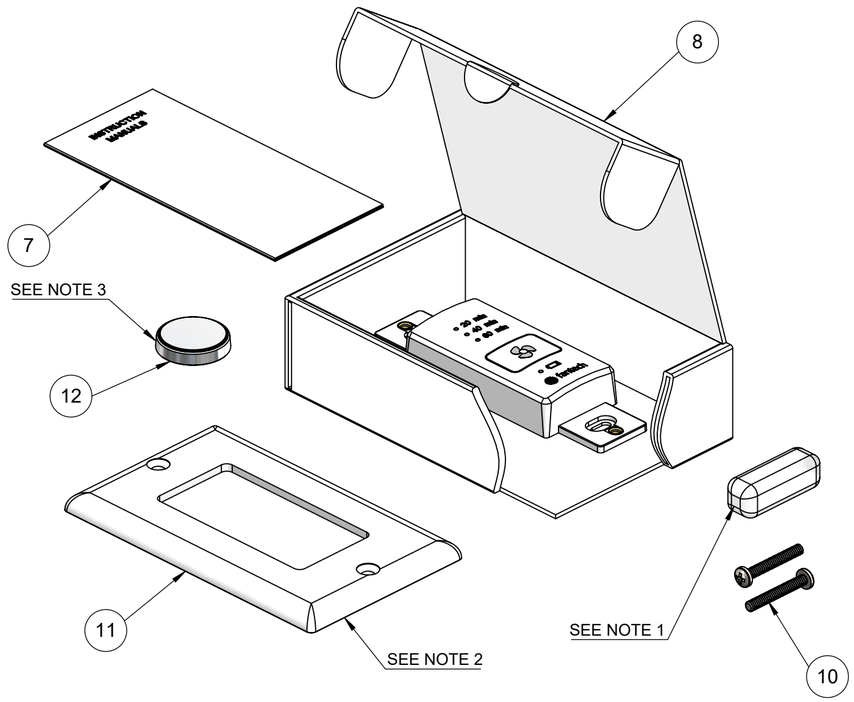

PARTS INSIDE BOX

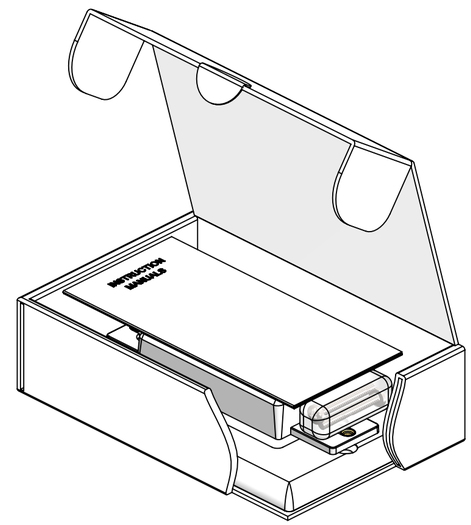

REVISIONS			
REV	DESCRIPTION	DATE	APPROVED
A	RELEASED	2020-01-17	AP
B	ADDED PRODUCT LABEL FOR GIFT BOX	10/02/2020	DP
C	Replaced FCC label location. Updated Note#4. Added Clear round sticker to seal box	20/7/2020	DP

C0NTROL EXPLODED VIEW

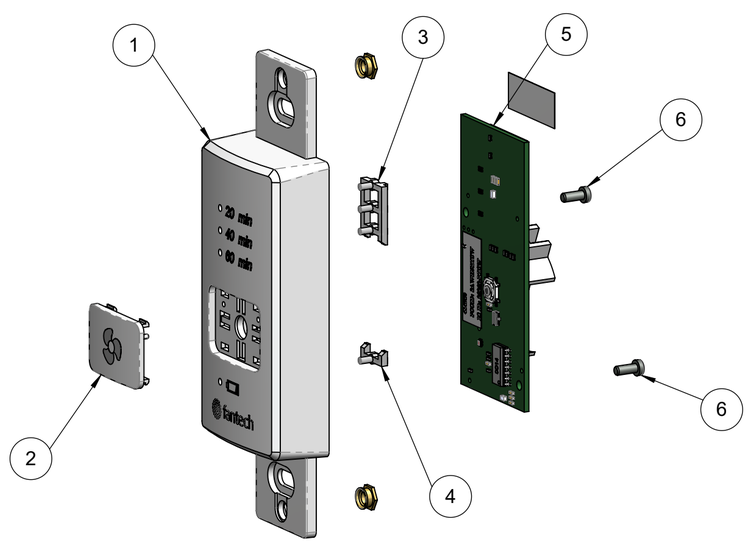

C0NTROL DIMENSIONS

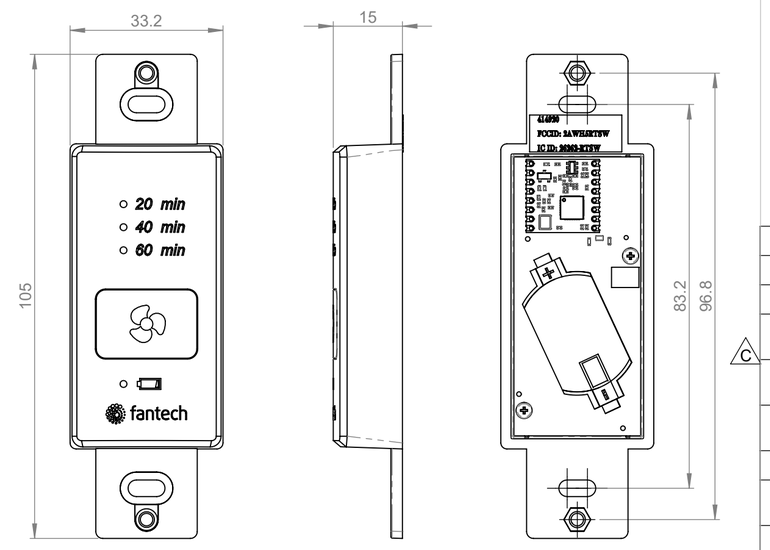

NOTES:

1. ITEMS 10 TO BE PLACED IN POLY BAG , ROLL IT UP AND TAPE IT.
2. DECORA PLATE ITEM 11 TO BE PLACED INTO POLYBAG WITH 2 SCREWS.
3. BATTERY TO BE KEPT IN ITS ORIGINAL PACKAGE.
4. FCC/ID LABEL TO BE PLACED ONTO P1880 Plastic HOUSING ITEM 1 AS SHOWN. (C)
5. ITEM #14 IS PLACED ON THE TOP OF GIFT BOX LIKE A BOX WRAP. AS A PRODUCT SEAL.

REFER TO "BOM P1880 ASM-414920 ITEM #

ITEM	PART NUMBER	DESCRIPTION	QTY
15		Clear round sticker with adhesive D=20mm, to seal box.	1
14	RTS-W LABEL	414920 Product label with adhesive	1
13		FCC/IC label, size 20x8mm. Refer to assembly drawing	1
12		Battery coin, lithium manganese dioxide CR2450,3V,600MAH UL certified MH28717.	1
11		1 GANG WALL PLATE PACKED WITH POLY BAG, WITH 2 SCREWS INCLUDED	1
10		'MACH.SCREW #6-32X0.75" WHT PAN (to secure the wall control into the electrical box)	2
8		'Light Yellow BOX 132x80x28mm size.	1
7		'P1880 A4 paper size, Operation and Installation manual, black/white ink	1
6		'PA2.0x5mm tapping screw	2
5	PCA-P1880	P1880 PCA	1
4	PLS-1880-LEN3	POLYCARBONATE - WONDERLITE PC-110 , TRANSPARENT, for 3 LEDs	1
3	PLS-1880-LEN3	POLYCARBONATE - WONDERLITE PC-110 , TRANSPARENT, for 1 LED	1
2	PLS-1880B	Button Plastic Cover, Lustran 433 ABS White 95196, refer to 3D file drawing	1
1	PLS-1880T	Top Plastic Cover Lustran 433 ABS White 95196, fit to Decora wall plate, refer to 3D file drawing	1

BOX CLOSED

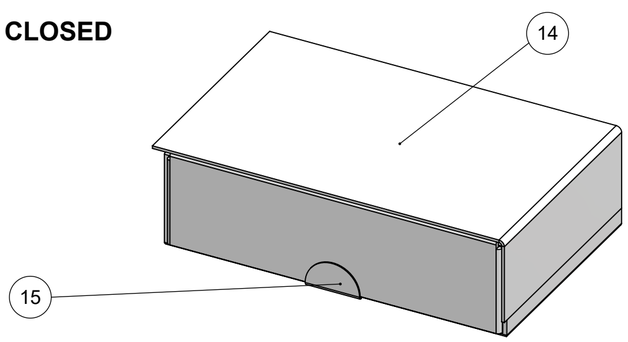

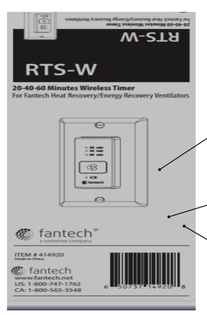

B

14

SEE NOTE #5

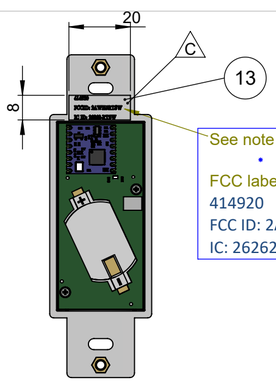

See note #4

FCC label Information:
414920
FCC ID: 2AWH5RTSW
IC: 26262-RTSW

Avnan ELECTRO INC.
2590 SHERIDAN GARDEN DR. #2
OAKVILLE, ONTARIO. L6J 7R2
TEL: 1-888-286-2698
FAX: 1-888-419-9997

THIS DOCUMENT CONTAINS RESTRICTED, PROPRIETARY, COPYRIGHTED INFORMATION, OWNERSHIP OF WHICH IS RETAINED BY AVNAN ELECTRO INC. RE-PRODUCTION, IMPLEMENTATION, PUBLICATION OR OTHER USE OF SUCH INFORMATION IS PROHIBITED UNLES AUTHORIZED BY AVNAN ELECTRO INC. WITH WRITTEN CONSENT

TOLERANCES: LINEAR: ± 0.1 ANGULAR: ±1°

UNITS: MILIMETERS

DATE: 2020-01-17

DRAWN BY: AP

SCALE 1:1 SHEET 1 OF 1

DRAWING NAME: **WIRELESS TIMER P1880**

P/N **ASM-414920**