定昌电子
DINGCHANG DIANZI

DC_GB_RK3288_V6.13B

Technical Specifications

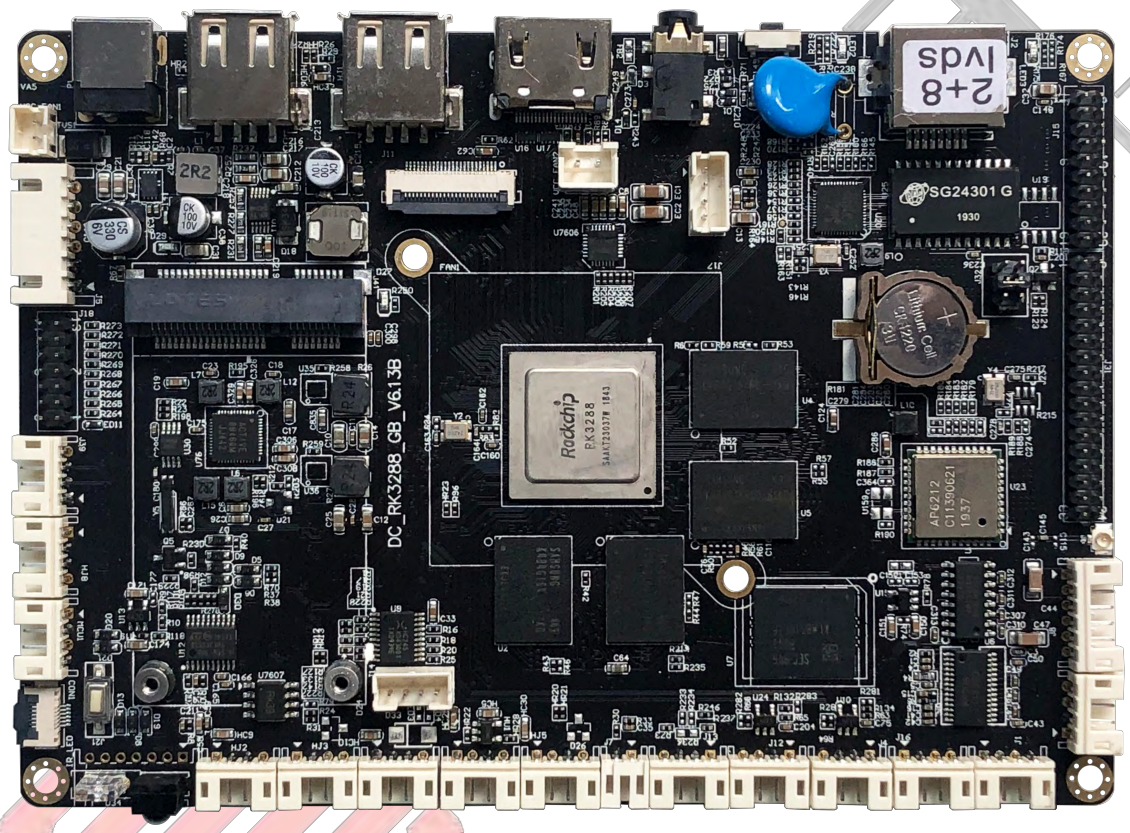

Version	Description	Date
V1.0	Original Version	2020-3-13
V1.1	Add certification information	2020-4-2

Content

1. Introduction....3
1.1. Introduction....3
1.2. Characteristics....3
2. Appearance and Port Description....4
3. Parameter Table....5
4. PCB specifications....7
4.1 PCB Dimension....7
4.2. PCB Parameters....7
5. Interface Specification....8
5.1. Interface description....8
5.1.1. 12V Electric fan interface....8
5.1.2. 5V Electric fan interface....8
5.1.3. Switching Power Supply/Standby Control....8
5.1.4. GPIO Interface....9
5.1.5. I2C1 Interface....10
5.1.6. MCU Record Interface....10
5.1.7. I2C Touching Interface....10
5.1.8. LED/IR Interface....10
5.1.9. Debug Interface....11
5.1.10. USB Port....11
5.1.11. ADC_IN Interface....11
5.1.12. RS485 Interface....11
5.1.13. UART3/UART1 Interface....11
5.1.14. RS232 (Serial port 3/Serial port 1)....12
5.1.15. Speaker Interface....12
5.1.16. Headset Socket....12
5.1.17. Backlight Power Socket....12
5.1.18. Screen Power Interface....13
5.1.19. LVDS Interface....13
5.1.20. EDP Interface....14
5.1.21. 4G Module Socket....15
5.1.22. MIPI DSI/CSI....15

2. Appearance and Port Description

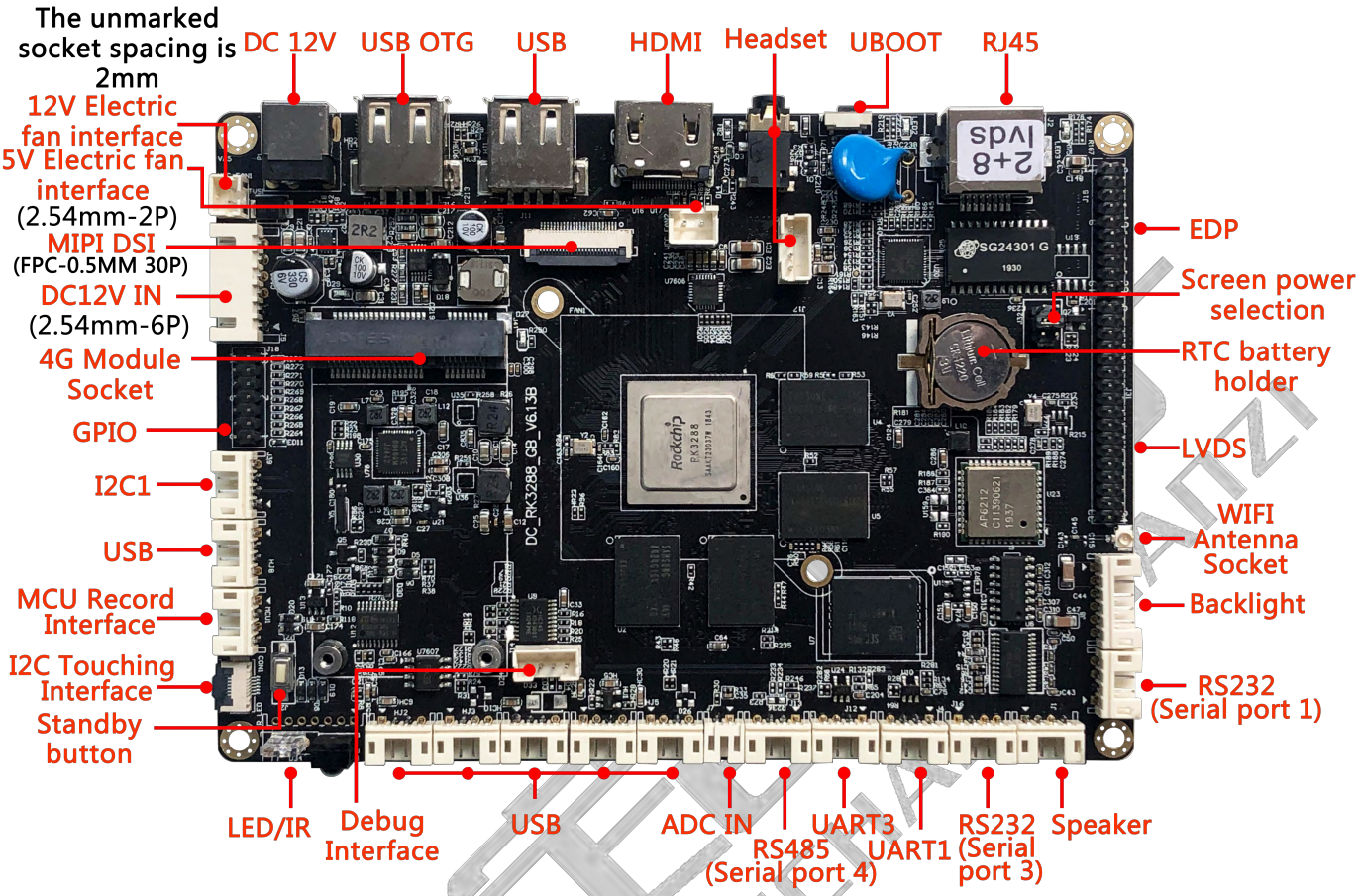

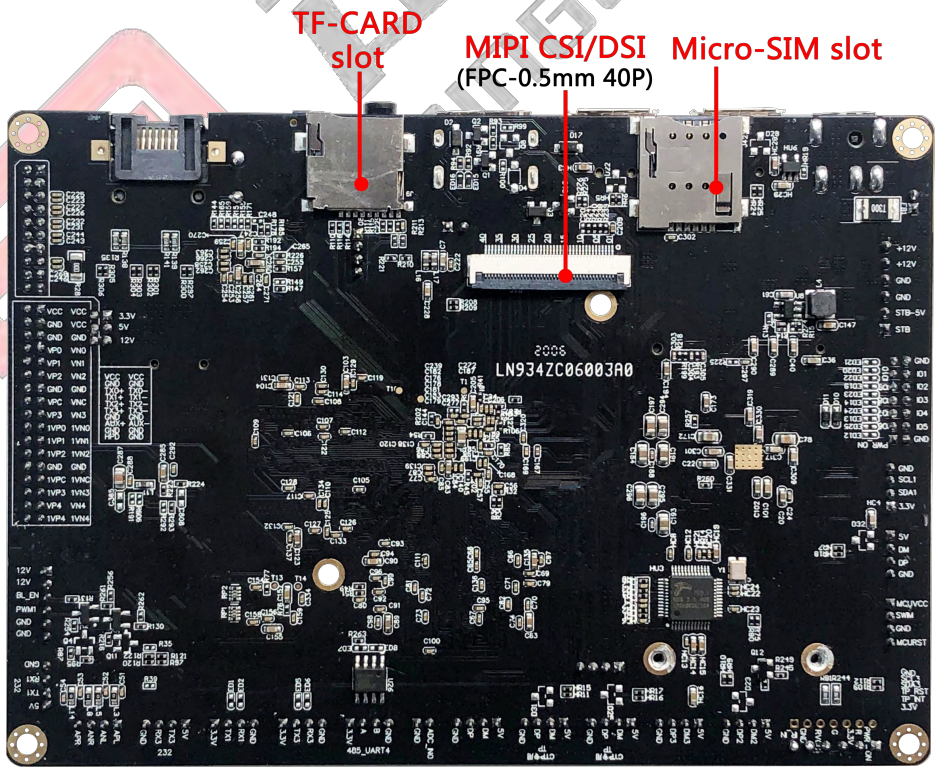

3. Parameter Table

Core Components	
CPU	RK3288 Quad-core Coretex-A17, 32-bit ARM, 28nm process design, Frequency up to 1.8GHz
GPU	Support Mali-T764 GPU, AFBC (Frame Buffer Compression) Support OpenGL ES 1.1/2.0/3.1, OpenCL, DirectX9.3 Support Embedded high-performance 2D acceleration hardware
DRAM	1G/2G(default)/4G
Flash memory	EMMC 8G(default)/16G/32G/64G
TF card slot	Max 128GB
Display Interface	
HDMI	HDMI2.0 support max 3840x2160P output
LVDS	1 *LVDS Interface Support Max 1920×1080
MIP DSI	1 * MIP DSI Interface, Support Max 4K
EDP	1 * EDP Interface, Support Max 2K
Audio Part	
Headset	1 *microphone single channel input(analogue signal) 1*audio dual channel output (analogue signal)
Amplifier	Dual channel output, support 8Ω 10W dual loudspeaker
Network	
Ethernet	1*RJ 45,10M/100M/1000M adaptive
Wifi/Bluetooth	On-board Wifi/Bluetooth module, support WiFi 2.4GHz/5GHz（5GHz optional）,supporting IEEE 802.11 a/b/g/n protocol Support Bluetooth 4.0（Support BLE）
Mobile Network	1*MINI PCI_E slot,extended to 3G/4G module
Basic Interface	
USB2.0	7*USB Host(1*USB socket，6*2.54mm-4P）
USB OTG	1*USB OTG， Used to debug the system, update the firmware, can also be used in Host mode
Serial port	1*RS485，3*TTL（2*RS232,1*TTL Debug serial）
GPIO interface	10*IO port
RTC	RTC real-time clock with 1220 button cell

Timing Switch	Support timing switch
IIC interface	2 channel IIC interface
MIPI camera	1*40PIN FPC slot
Infrared	With a one-way infrared receiver, it has the function of infrared remote control.
Others	
Operation system	Android 5.1/7.1
Power socket	1* DC 12V Input(DC-5.5*2.5MM),1*6P Input(2.54mm-6P，support switch STANDBY）
Adaptive	12V 2A-5A
System Update	Support PC/U disk/TF card
Working Environment	
Temperature	-25℃～70℃(suggest 5℃～35℃)
Humidity	10%～90%
Storage Temperature	-30℃～75℃(suggest normal temperature)

定昌电子 DINGCHANG DIANZI

4. PCB specifications

4.1 PCB Dimension

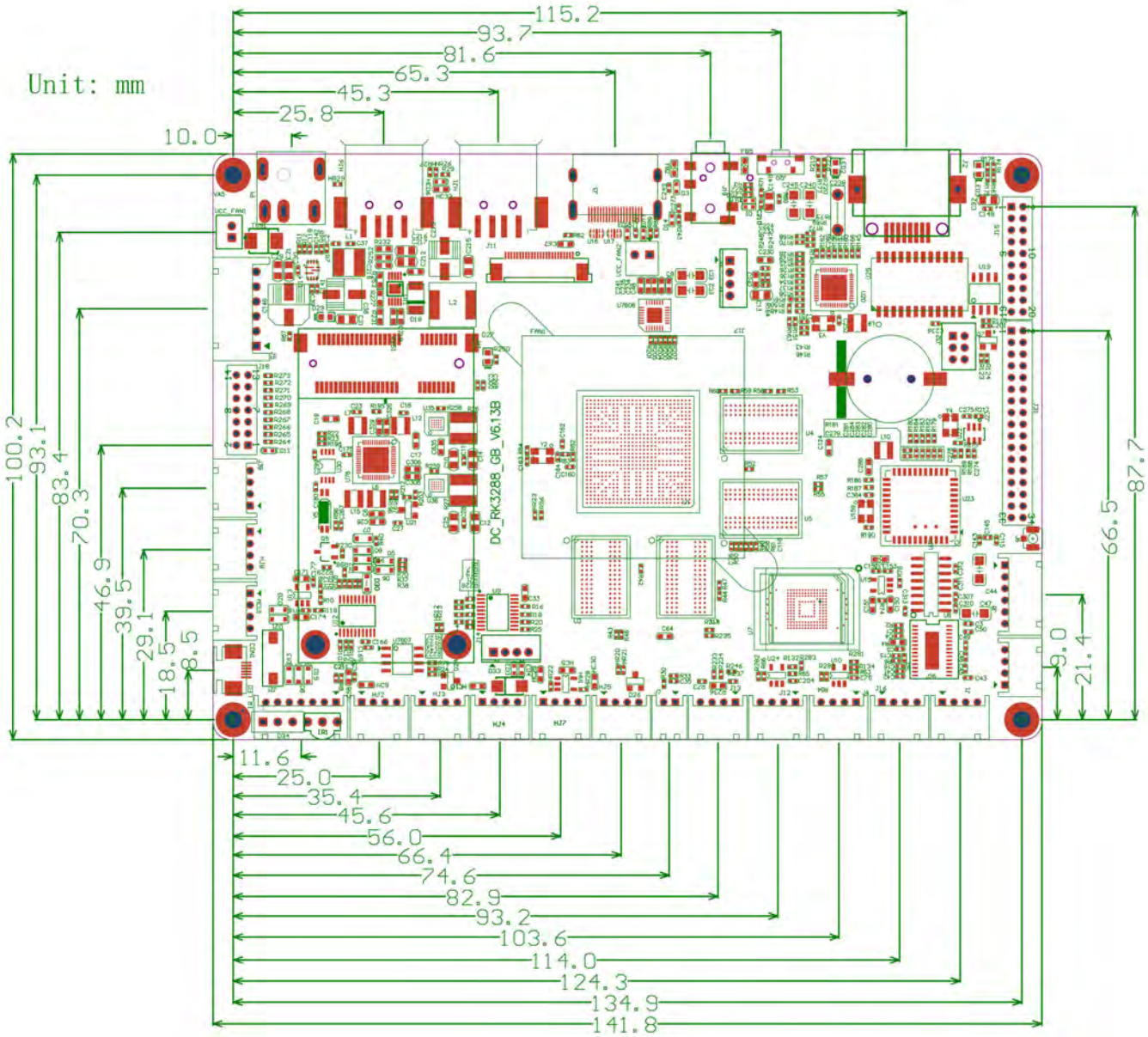

4.2. PCB Parameters

PCB number of layers ： 6
Main Board Dimensions： 142*102*13mm
PCB Dimensions: 142*100*1.6mm
PCB Thickness ： front side≤9mm back side:≤3mm
PCB Color ： Black
PCB Technique： Sunk Gold
Diameters of the screw：Φ3mm*4

5. Interface Specification

5.1. Interface description

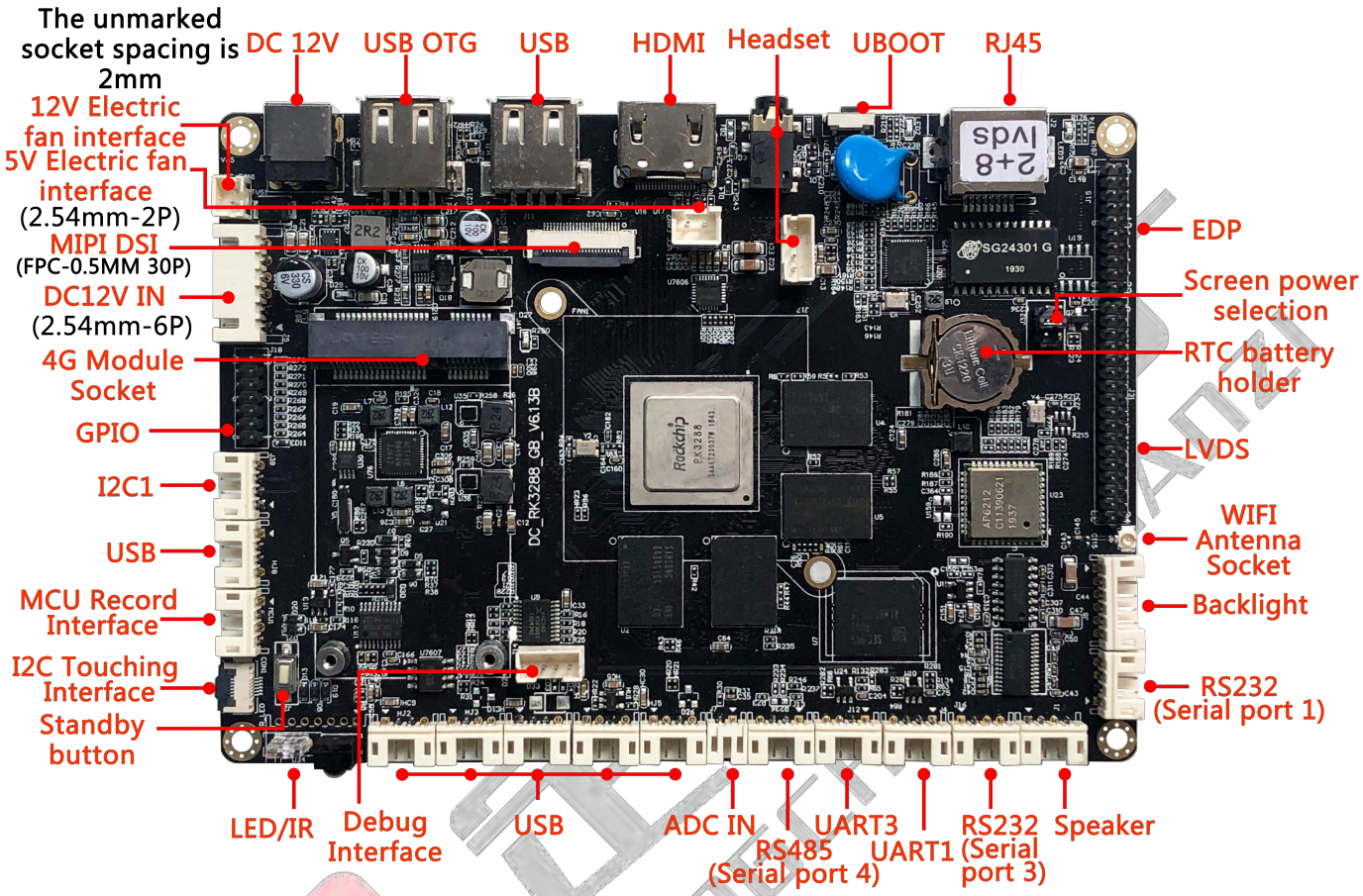

Note:All ports are forbidden to connect to any power except power switch and DC port

"▼" first pin for socket

5.1.1. 12V Electric fan interface

No.	Definition	Attribute	Description
1	GND	Ground	Ground
2	12V	Power	+12V Output

5.1.2. 5V Electric fan interface

No.	Definition	Attribute	Description
1	GND	Ground	Ground
2	5V	Power	+5V Output

5.1.3. Switching Power Supply/Standby Control

No.	Definition	Attribute	Description

1	STB	Output	Signal Output
2	STB-5V	Power	Standby+5V Input
3	GND	Ground	Ground
4	GND	Ground	Ground
5	12V	Power	+12V Input
6	12V	Power	+12V Input

5.1.4. GPIO Interface

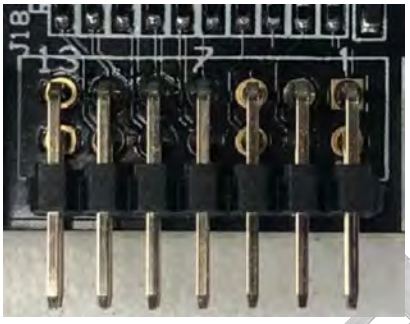

No.	Definition	Attribute	Description
1	PWR_ON	Input	Power Switch ON-OFF
2	GND	Ground	Ground
3	GPIO7_A5	Input/Output	GPIO Signal
4	GPIO8_A1	Input/Output	GPIO Signal
5	GPIO7_A6	Input/Output	GPIO Signal
6	GPIO8_A2	Input/Output	GPIO Signal
7	GPIO7_B3	Input/Output	GPIO Signal
8	GPIO7_C5	Input/Output	GPIO Signal
9	GPIO7_B4	Input/Output	GPIO Signal
10	GPIO8_B0	Input/Output	GPIO Signal
11	GPIO7_B5	Input/Output	GPIO Signal
12	GPIO0_C2	Input/Output	GPIO Signal
13	GND	Ground	Ground
14	GND	Ground	Ground

*All IO interfaces are not allowed to connect to power more than 3.3V, details please see API file

Power ON-OFF:Connect control wire to GND or external switch to realize it(the standby key of the main board is consistent with the control mode of all switch control)

No.	Status before Pressing/short circuit	Time	Status After Pressing/Short circuit
1	Close	2-3s	Start
2	Start	Touching	Sleeping
3	Sleeping	Touch	Start
4	Start	2s-3s	Pop out close/restart/sleeping selection box
5	Start	10s-12s	Close

5.1.5. I2C1 Interface

No.	Definition	Attribute	Description
1	3.3V	Power	+3.3V Input
2	SDA1	Input/Output	I2C1 data Line
3	SCL1	Input/Output	I2C1 Timing Line
4	GND	Ground	Ground

5.1.6. MCU Record Interface

No.	Definition	Attribute	Description
1	MCUVCC	Power	+3.3V Output
2	SWIM	Input	Single wire interface
3	GND	Ground	Ground
4	MCURST	Input	Reset

5.1.7. I2C Touching Interface

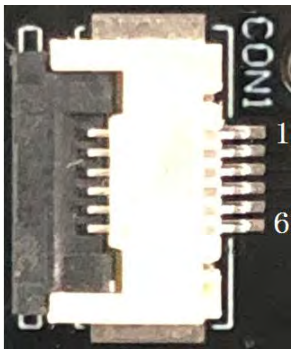

No.	Definition	Attribute	Description
1	GND	Ground	Ground
2	SCL3	Input/Output	I2C3 Timing Line
3	SDA3	Input/Output	I2C3 Data Line
4	TP_RST	Input/Output	Touching Screen Reset Signal
5	TP_INT	Input/Output	Touching Screen Interrupt Signal
6	3.3V	Power Output	+3.3V Output

5.1.8. LED/IR Interface

No.	Definition	Attribute	Description
1	IR_IN	Input	Infrared receiver signal input
2	GND	Ground	Ground
3	IRVCC	Power	+5V Output
4	G	Indicator Light	Working Light
5	3.3V	Power	+3.3V Output
6	R	Indicator Light	Standby Light
7	PWR_ON	Input	Switch Control Line，Single pull down effective（Details please see 5.1.4 Switch control）

***The indicator light is connected by common anode, the positive pole is connected to 3.3V, and the negative pole is connected to the corresponding indicator light pin**

5.1.9. Debug Interface

No.	Definition	Attribute	Description
1	3.3V	Power	+3.3V Output
2	TX2	Output	Serial port 2 data send（TTL）
3	RX2	Input	Serial port 2 data receive（TTL）
4	GND	Ground	Ground

5.1.10. USB Port

No.	Definition	Attribute	Description
1	5V	Power	+5VOutput
2	DM	Output	USB Negative
3	DP	Output	USB Positive
4	GND	Ground	Ground

5.1.11. ADC_IN Interface

No.	Definition	Attribute	Description
1	GND	Ground	Ground
2	ADC_IN0	Output	ADC_IN0 Output

5.1.12. RS485 Interface

No.	Definition	Attribute	Description
1	3.3V	Power Output	+3.3V Output
2	RS485A	Input/Output	Serial4，Date+
3	RS485B	Input/Output	Serial4，Date-
4	GND	Ground	Ground

***Serial port 4 Device NO.:ttys4；**

***GPIO5_B5 Serial:Receive/Send data，GPIO5_B5 output low level to receive data, GPIO5_B5 output high level to send data.**

5.1.13. UART3/UART1 Interface

No.	Definition	Attribute	Description
1	3.3V	Power Output	+3.3V Output
2	TX3/TX1	Output	Serial port 3/Serial port 1 Data send（TTL）
3	RX3/RX1	Input	Serial port 3/Serial port 1 Data Receive（TTL）
4	GND	Ground	Ground

***Serial port 1 Device NO.:ttys1，Serial port 3 Device NO.:ttys3**

***The same serial port, TTL and RS232 cannot be used at the same time**

5.1.14. RS232 (Serial port 3/Serial port 1)

No.	Definition	Attribute	Description
1	GND	Ground	Ground
2	232_R1/232_R3	Input	Serial port 3/Serial port 1 Data send (RS232)
3	232_T3/232_T1	Output	Serial port 3/Serial port 1 Data Receive (RS232)
4	5V	Power	+5V Output

***The same serial port, TTL and RS232 cannot be used at the same time**

5.1.15. Speaker Interface

This audio signal is amplified by a built-in amplifier, and it is recommended to connect an external 8 Ω 10W double speaker；

No.	Definition	Attribute	Description
1	APL	Output	Output L+ Audio Signal
2	ANL	Output	Output L- Audio Signal
3	ANR	Output	Output R- Audio Signal
4	APR	Output	Output R+ Audio Signal

5.1.16. Headset Socket

Headset Socket and Headset 4P Socket are same signal sent from different socket, and it is only used for headset

No.	Definition	Attribute	Description
1	LOUT_A	Output	Output L Track Audio Signal
2	MIC_IN	Input	Input L Track Audio Signal
3	GND	Output	Ground
4	ROUT_A	Output	Output R Track Audio Signal

5.1.17. Backlight Power Socket

It is used for power supply of LVDS or EDP panel, and the current of 12V power suppl is not more than 1.5A；and When using a 19 inch or larger screen, or the power of the screen backlight is more than 20W, please take power from other power boards to avoid system instability.

The power for backlight enable is 3.3V, if other voltage is required, please use IO level converter circuit.

This 12V power is only used for backlight, it is forbidden to use for power supply for main-board.

No.	Definition	Attribute	Description
1	12V	Power	+12V Output
2	12V	Power	+12VOutput
3	BL_EN	Output	Backlight enable control signal（3.3V）
4	PWM1	Output	Backlight Brightness adjustment signal（0-5V）
5	GND	Ground	Ground
6	GND	Ground	Ground

5.1.18. Screen Power Interface

It is used for power supply or LVDS or EDP panel. The screen power can be selected by inserting 2.0mm jumper cap.There are 3.3V/5V/12V for supply, you can select 5V by inserting jumper cap to indicated pins.

To avoid board or screen burning, please note:

1. Please confirm the correct specification or power supply for screen. And power supply meets the maximum current of the screen.
2. Please confirm the correct power of jumper cap by multimeter
3. Every power is forbidden to connect to each other, or the board maybe burnt.

No.	Definition	Attribute	Description	No.	Definition	Attribute	Description
1	3.3V	Power	+3.3V	2	VCC	Power	LVDS or EDP Power
3	5V	Power	+5V	4	VCC	Power	LVDS or EDP Power
5	12V	Power	+12V	6	VCC	Power	LVDS or EDP Power

5.1.19. LVDS Interface

Standard LVDS interface, support single/double, 6/8 1080P LVDS screen

Note:it is only used for LVDS, please confirm the specification, make sure the interface definition is consistent with voltage.If not, please adjust the line.

No.	Definition	Attribute	Description
1	VCC_LVDS	Power	Output +3.3V/+5V/+12V
2	VCC_LVDS	Power	Output +3.3V/+5V/+12V
3	VCC_LVDS	Power	Output +3.3V/+5V/+12V
4	GND	Ground	Ground
5	GND	Ground	Ground
6	GND	Ground	Ground
7	LVDS0_VN0	Output	Data channel

8	LVDS0_VP0	Output	Data channel
9	LVDS0_VN1	Output	Data channel
10	LVDS0_VP1	Output	Data channel
11	LVDS0_VN2	Output	Data channel
12	LVDS0_VP2	Output	Data channel
13	GND	Ground	Ground
14	GND	Ground	Ground
15	LVDS0_VNC	Output	Data channel
16	LVDS0_VPC	Output	Data channel
17	LVDS0_VN3	Output	Data channel
18	LVDS0_VP3	Output	Data channel
19	LVDS1_VN0	Output	Data channel
20	LVDS1_VP0	Output	Data channel
21	LVDS1_VN1	Output	Data channel
22	LVDS1_VP1	Output	Data channel
23	LVDS1_VN2	Output	Data channel
24	LVDS1_VP2	Output	Data channel
25	GND	Ground	Ground
26	GND	Ground	Ground
27	LVDS1_VNC	Output	Data channel
28	LVDS1_VPC	Output	Data channel
29	LVDS1_VN3	Output	Data channel
30	LVDS1_VP3	Output	Data channel
31	LVDS0_VN4	Output	Data channel
32	LVDS0_VP4	Output	Data channel
33	LVDS1_VN4	Output	Data channel
34	LVDS1_VP4	Output	Data channel

5.1.20. EDP Interface

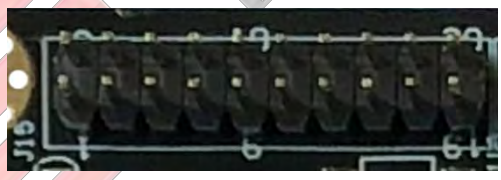

it is only used for EDP, please confirm the specification, make sure the interface definition is consistent with voltage.If not, please adjust the line.

No.	Definition	Attribute	Description
1	VCC_LVDS	Power	Output +3.3V/+5V/+12V
2	VCC_LVDS	Power	Output +3.3V/+5V/+12V
3	GND	Ground	Ground
4	GND	Ground	Ground
5	EDPTX0_N	Output	Data channel
6	EDPTX0_P	Output	Data channel
7	EDPTX1_N	Output	Data channel
8	EDPTX1_P	Output	Data channel

9	EDPTX2_N	Output	Data channel
10	EDPTX2_P	Output	Data channel
11	EDPTX3_N	Output	Data channel
12	EDPTX3_P	Output	Data channel
13	GND	Ground	Ground
14	GND	Ground	Ground
15	EDPAUX_N	Output	Data channel
16	EDPAUX_P	Output	Data channel
17	GND	Ground	Ground
18	GND	Ground	Ground
19	GND	Ground	Ground
20	NC	/	/

5.1.21. 4G Module Socket

52P MINI PCI-E socket, is used for 4G module assembly(optional, can't connect to any other external device)

① According to the module model, record the corresponding software.

② Insert the gold finger of the module into the 4G module socket at an angle of 45 °

③ Insert the Micro-SIM card into the slot on back of the board.

④ Some IOT cards need to be configured with APN, please consult SIM card operator to obtain APN, and then add / configure

5.1.22. MIPI DSI/CSI

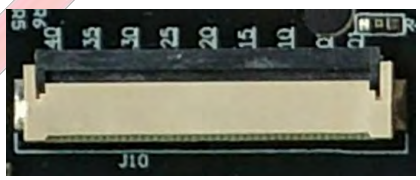

Note:The Slot is used to connect MIPI or Camera, please make sure the screen specifications consistent with interface definition.If not, it can be converted by conversion board. For more information, please contact with technical manager.

Please confirm the cable (up/down), before inserting into the slot, to avoid screen or board damage.

No.	Definition	Attribute	Description

1	VCC_SYS	Power	+5V Output
2	MIPI_PWRO	Input/Output	Camera Control
3	MIPI_PWR1	Input/Output	Camera Control
4	I2C4_SDA	Input/Output	I2C4 Data Signal
5	I2C4_SCL	Output	I2C4 Clock Signal
6	MIPI_RST0	Output	MIPI Reset
7	CIF_PDN1	Input/Output	Switch Enable Control
8	CIF_PDN0	Input/Output	Switch Enable Control
9	MIPI_MCLK0	Output	MIPI Clock Signal
10	GND	Ground	Ground
11	MIPI_RX_D3P	Input	MIPI Data Signal 3+
12	MIPI_RX_D3N	Input	MIPI Data Signal 3-
13	GND	Ground	Ground
14	MIPI_RX_D2P	Input	MIPI Data Signal 2+
15	MIPI_RX_D2N	Input	MIPI Data Signal 2-
16	GND	Ground	Ground
17	MIPI_RX_CLKP	Input	MIPI Data Signal Clock +
18	MIPI_RX_CLKN	Input	MIPI Data Signal Clock -
19	GND	Ground	Ground
20	MIPI_RX_D1P	Input	MIPI Data Signal 1+
21	MIPI_RX_D1N	Input	MIPI Data Signal 1-
22	GND	Ground	Ground
23	MIPI_RX_D0P	Input	MIPI Data Signal 0+
24	MIPI_RX_D0N	Input	MIPI Data Signal 0-
25	GND	Ground	Ground
26	MIPI_TX/RX_D3P	Input/Output	MIPI Data Signal 3+
27	MIPI_TX/RX_D3N	Input/Output	MIPI Data Signal 3-
28	GND	Ground	Ground
29	MIPI_TX/RX_D2P	Input/Output	MIPI Data Signal 2+
30	MIPI_TX/RX_D2N	Input/Output	MIPI Data Signal 2-
31	GND	Ground	Ground
32	MIPI_TX/RX_CLKP	Input/Output	MIPI Data Signal Clock +
33	MIPI_TX/RX_CLKN	Input/Output	MIPI Data Signal Clock -
34	GND	Ground	Ground
35	MIPI_TX/RX_D1P	Input/Output	MIPI Data Signal 1+
36	MIPI_TX/RX_D1N	Input/Output	MIPI Data Signal 1-
37	GND	Ground	Ground
38	MIPI_TX/RX_D0P	Input/Output	MIPI Data Signal 0+
39	MIPI_TX/RX_D0N	Input/Output	MIPI Data Signal 0-
40	GND	Ground	Ground

FCC STATEMENT

1. **This device complies with Part 15 of the FCC Rules.**
   Operation is subject to the following two conditions:
   (1) This device may not cause harmful interference, and
   (2) This device must accept any interference received, including interference that may cause undesired operation.
2. **Changes or modifications not expressly approved by the party responsible for compliance could void the user's authority to operate the equipment.**

FCC Radiation Exposure Statement:

This equipment complies with FCC radiation exposure limits set forth for an uncontrolled environment. In order to avoid the possibility of exceeding the FCC radio frequency exposure limits, Human proximity to the antenna shall not be less than 20cm (8 inches) during normal operation.

NOTE: This equipment has been tested and found to comply with the limits for a Class B digital, pursuant to Part 15 or the FCC Rules. These limits are designed to provide reasonable protection against harmful interference in a residential installation. This equipment generates, uses and can radiate radio frequency energy and, if not installed and used in accordance with the instructions, may casue harmful interference to radio communications, However, there is no guarantee that interference will not occur in a particular installation. If the equipment does cause harmful interference to radio or television reception, which can be determined by turning the equipment off and on, the user is encouraged to try to correct the interference by one or more of the following measures:

--- Reorient or relocate the receiving antenna.
--- Increase the separation between the equipment and receiver.
--- Connect the equipment into an outlet on a circuit different from that to which the receiver is connected.
--- Consult the dealer or an experienced radio/ TV technician for help.