TECHNICAL REPORT

Report No.:	FCC2005297-01
File reference No.:	2020-06-28
Applicant:	Shenzhen HXD Electrics Co., Ltd.
Product:	Bone Conduction Wireless Teaching System
Model No.:	H-900, H-900A, H-910B
Brand Name:	1DORADO, GOODENT
Test Standards:	FCC Part15.236
Test result:	It is herewith confirmed and found to comply with the requirements set up by ANSI C63.10&FCC Part 15 regulations for the evaluation of electromagnetic compatibility

Approved By

Jack Chung

Jack Chung

Manager

Dated: June 28,2020

Results appearing herein relate only to the sample tested
The technical reports is issued errors and omissions exempt and is subject to withdrawal at

SHENZHEN TIMEWAY TESTING LABORATORIES

Zone C, 1st Floor, Block B, Jun Xiang Da Building, Zhongshan Park Road West, Tong Le Village, Nanshan District, Shenzhen, China

Tel (755) 83448688, Fax (755) 83442996, E-Mail:info@timeway-lab.com

Special Statement:

The testing quality ability of our laboratory meet with "Quality Law of People's Republic of China" Clause 19.

The testing quality system of our laboratory meet with ISO/IEC-17025 requirements, which is approved by CNAS. This approval result is accepted by MRA of APLAC.

Our test facility is recognized, certified, or accredited by the following organizations:

CNAS-LAB Code: L2292

The EMC Laboratory has been assessed and in compliance with CNAS-CL01 accreditation criteria for testing Laboratories (identical to ISO/IEC 17025:2005 General Requirements) for the Competence of testing Laboratories.

FCC-Registration No.: 744189

The EMC Laboratory has been registered and fully described in a report filed with the (FCC) Federal Communications commission. The acceptance letter from the FCC is maintained in our files. Registration No.: 744189.

Industry Canada (IC) —Registration No.:5205A

The EMC Laboratory has been registered by Certification and Engineering Bureau of Industry Canada for radio equipment testing with Registration No.: 5205A.

A2LA (Certification Number:5013.01)

The EMC Laboratory has been accredited by the American Association for Laboratory Accreditation (A2LA). Certification Number:5013.01

The report refers only to the sample tested and does not apply to the bulk.
This report is issued in confidence to the client and it will be strictly treated as such by the SHENZHEN TIMEWAY TESTING LABORATORIES. It may not be reproduced rather in its entirety or in part and it may not be used for adverting. The client to whom the report is issued may, however, show or send it . or a certified copy there of prepared by the SHENZHEN TIMEWAY TESTING LABORATORIES. to his customer. Supplier or others persons directly concerned. SHENZHEN TIMEWAY TESTING LABORATORIES. will not, without the consent of the client enter into any discussion of correspondence with any third party concerning the contents of the report.
In the event of the improper use of the report. The SHENZHEN TIMEWAY TESTING LABORATORIES. reserves the rights to withdraw it and to adopt any other remedies which may be appropriate.

Test Report Conclusion

Content

1.0	**General Details**	4
1.1	Test Lab Details	4
1.2	Applicant Details	4
1.3	Description of EUT	4
1.4	Submitted Sample	4
1.5	Test Duration	5
1.6	Test Uncertainty	5
1.7	Test By	5
2.0	**List of Measurement Equipment**	6
3.0	**Technical Details**	7
3.1	Summary of Test Results	7
3.2	Test Standards	7
4.0	EUT Modification	7
5.0	**Test Results…**	8
5.1	E.U.T. Operation Condition	8
5.2	Test Procedure & Measurement Data	8
5.2.1	Carrier Radiated Power & Radiated Spurious Emissions	8
5.2.2	Occupied Bandwidth	11
5.2.3	Frequency Stability	15
5.2.4	Conducted Emissions	17
6.0	Antenna Requirement	21
6.0	**FCC ID Label…**	22
7.0	**Photo of Test Setup and EUT View**	23

The report refers only to the sample tested and does not apply to the bulk.
This report is issued in confidence to the client and it will be strictly treated as such by the SHENZHEN TIMEWAY TESTING LABORATORIES. It may not be reproduced rather in its entirety or in part and it may not be used for adverting. The client to whom the report is issued may, however, show or send it . or a certified copy there of prepared by the SHENZHEN TIMEWAY TESTING LABORATORIES. to his customer. Supplier or others persons directly concerned. SHENZHEN TIMEWAY TESTING LABORATORIES. will not, without the consent of the client enter into any discussion of correspondence with any third party concerning the contents of the report.
In the event of the improper use of the report. The SHENZHEN TIMEWAY TESTING LABORATORIES. reserves the rights to withdraw it and to adopt any other remedies which may be appropriate.

1.0	**General Details**	
1.1	Test Lab Details	
	Name :	SHENZHEN TIMEWAY TESTING LABORATORIES.
	Address:	Zone C, 1st Floor, Block B, Jun Xiang Da Building, Zhongshan Park Road West, Tong Le Village, Nanshan District, Shenzhen, China
	Telephone:	(755) 83448688
	Fax:	(755) 83442996
	Site Listed with Federal Communications commission (FCC)	
	Registration Number:744189	
	For 3m Anechoic Chamber	
	Site Listed with Industry Canada of Ottawa, Canada	
	Registration Number: IC: 5205A	
	For 3m Anechoic Chamber	
1.2	Applicant Details	
	Applicant:	Shenzhen HXD Electrics Co., Ltd.
	Address:	7A, Building D, ZhongTai Science Park, ZhuAo Third Industrial Zone, XiXiang Street, Bao'an district, Shenzhen
	Telephone:	0755- 29968067
	Fax:	0755-29968057
1.3	Description of EUT	
	Product:	Bone Conduction Wireless Teaching System
	Manufacturer:	Shenzhen HXD Electrics Co., Ltd.
	Address:	7A, Building D, ZhongTai Science Park, ZhuAo Third Industrial Zone, XiXiang Street, Bao'an district, Shenzhen
	Brand Name:	1DORADO, GOODENT
	Model Number:	H-900
	Additional Model Number: H-900A, H-910B	
	Type of Modulation	FM
	Frequency range	76.8MHz-87.8MHz
	Channel Spacing	1MHz
	Channel Number	12
	Frequency Selection	By key button
	Antenna:	Reverse polarity Antenna connector with maximum Gain of this antenna is 2dBi;

The report refers only to the sample tested and does not apply to the bulk.
This report is issued in confidence to the client and it will be strictly treated as such by the SHENZHEN TIMEWAY TESTING LABORATORIES. It may not be reproduced rather in its entirety or in part and it may not be used for adverting. The client to whom the report is issued may, however, show or send it . or a certified copy there of prepared by the SHENZHEN TIMEWAY TESTING LABORATORIES. to his customer. Supplier or others persons directly concerned. SHENZHEN TIMEWAY TESTING LABORATORIES. will not, without the consent of the client enter into any discussion of correspondence with any third party concerning the contents of the report.
In the event of the improper use of the report. The SHENZHEN TIMEWAY TESTING LABORATORIES. reserves the rights to withdraw it and to adopt any other remedies which may be appropriate.

1.4 Submitted Sample: 2 Samples

1.5 Test Duration
2020-06-03 to 2020-06-28

1.6 Test Uncertainty
Conducted Emissions Uncertainty =3.6dB
Radiated Emissions below 1GHz Uncertainty =4.7dB
Radiated Emissions above 1GHz Uncertainty =6.0dB
Conducted Power Uncertainty =6.0dB
Occupied Channel Bandwidth Uncertainty =5%

1.7 Test Engineer

The sample tested by Terry Tang

Print Name: Terry Tang

The report refers only to the sample tested and does not apply to the bulk.
This report is issued in confidence to the client and it will be strictly treated as such by the SHENZHEN TIMEWAY TESTING LABORATORIES. It may not be reproduced rather in its entirety or in part and it may not be used for adverting. The client to whom the report is issued may, however, show or send it . or a certified copy there of prepared by the SHENZHEN TIMEWAY TESTING LABORATORIES. to his customer. Supplier or others persons directly concerned. SHENZHEN TIMEWAY TESTING LABORATORIES. will not, without the consent of the client enter into any discussion of correspondence with any third party concerning the contents of the report.
In the event of the improper use of the report. The SHENZHEN TIMEWAY TESTING LABORATORIES. reserves the rights to withdraw it and to adopt any other remedies which may be appropriate.

2.0 Test Equipment					
Instrument Type	Manufacturer	Model	Serial No.	Date of Cal.	Due Date
ESPI Test Receiver	R&S	ESPI 3	100379	2020-06-23	2021-06-22
Loop Antenna	EMCO	6507	00078608	2020-06-23	2021-06-22
Spectrum	R&S	FSIQ26	100292	2020-06-23	2021-06-22
Horn Antenna	A-INFO	LB-180400-KF	J211060660	2020-06-23	2021-06-22
Horn Antenna	R&S	BBHA 9120D	9120D-631	2018-07-09	2021-07-08
Power meter	Anritsu	ML2487A	6K00003613	2019-08-22	2020-08-21
Power sensor	Anritsu	MA2491A	32263	2019-08-22	2020-08-21
Bilog Antenna	Schwarebeck	VULB9163	9163/340	2018-07-04	2021-07-03
9*6*6 Anechoic	--	--	N/A	2018-02-07	2021-02-06
EMI Test Receiver	RS	ESVB	826156/011	2020-06-23	2021-06-22
EMI Test Receiver	RS	ESH3	860904/006	2020-06-23	2021-06-22
Spectrum	HP/Agilent	ESA-L1500A	US37451154	2020-06-23	2021-06-22
Spectrum	HP/Agilent	E4407B	MY50441392	2020-06-23	2021-06-22
Spectrum	RS	FSP	1164.4391.38	2020-01-16	2021-01-15
RF Cable	Zhengdi	ZT26-NJ-NJ-8 M/FA	--	2020-06-23	2021-06-22
RF Cable	Zhengdi	7m	--	2020-06-23	2021-06-22
RF Switch	EM	EMSW18	060391	2020-06-23	2021-06-22
Pre-Amplifier	Schwarebeck	BBV9743	#218	2020-06-23	2021-06-22
Pre-Amplifier	HP/Agilent	8449B	3008A00160	2020-06-23	2021-06-22
LISN	SCHAFFNER	NNB42	00012	2020-01-07	2021-01-06
DC Power Supply	Jingtong	JT12098	WYK-305	2019-08-18	2020-08-18
Discretion temperature exchange metabolic humidity hot cabinet	Guangzhou HaiZhu HanDi test equipment factory	GDJS-500C	2004040	2019-08-21	2020-08-20

The report refers only to the sample tested and does not apply to the bulk.
This report is issued in confidence to the client and it will be strictly treated as such by the SHENZHEN TIMEWAY TESTING LABORATORIES. It may not be reproduced rather in its entirety or in part and it may not be used for adverting. The client to whom the report is issued may, however, show or send it . or a certified copy there of prepared by the SHENZHEN TIMEWAY TESTING LABORATORIES. to his customer. Supplier or others persons directly concerned. SHENZHEN TIMEWAY TESTING LABORATORIES. will not, without the consent of the client enter into any discussion of correspondence with any third party concerning the contents of the report.
In the event of the improper use of the report. The SHENZHEN TIMEWAY TESTING LABORATORIES. reserves the rights to withdraw it and to adopt any other remedies which may be appropriate.

3.0 Technical Details

3.1 Summary of test results

The EUT has been tested according to the following specifications:

Requirement	CFR 47 Section	Result	Notes
Antenna Requirement	FCC Part15.203	Pass	Complies
Maximum Radiated Power	FCC Part15.236 (d)(1)	Pass	Complies
Occupied Bandwidth	FCC Part15.236 (f)(2)	Pass	Complies
Frequency Tolerance	FCC Part15.236(f)(3)	Pass	Complies
Emission Mask	FCC Part15.236(g)	Pass	Complies
Radiated Spurious Emissions	FCC Part2	Pass	Complies
Conducted Emissions	FCC Part15.207(a)，15.107	Pass	Complies

3.2 Test Standards

FCC Part 15 Subpart & Subpart C, Paragraph 15.236

4.0 EUT Modification

No modification by SHENZHEN TIMEWAY TESTING LABORATORIES.

The report refers only to the sample tested and does not apply to the bulk.
This report is issued in confidence to the client and it will be strictly treated as such by the SHENZHEN TIMEWAY TESTING LABORATORIES. It may not be reproduced rather in its entirety or in part and it may not be used for adverting. The client to whom the report is issued may, however, show or send it . or a certified copy there of prepared by the SHENZHEN TIMEWAY TESTING LABORATORIES. to his customer. Supplier or others persons directly concerned. SHENZHEN TIMEWAY TESTING LABORATORIES. will not, without the consent of the client enter into any discussion of correspondence with any third party concerning the contents of the report.
In the event of the improper use of the report. The SHENZHEN TIMEWAY TESTING LABORATORIES. reserves the rights to withdraw it and to adopt any other remedies which may be appropriate.

5 Test Results

5.1 EUT Operation Condition

Operation Environment:

Temperature:	20.0 ℃~25 ℃
Humidity:	50~70% RH
Atmospheric Pressure:	980~1012 mbar
EUT Operation:	Test the EUT in transmitting mode

5.2 Test Procedure & Measurement Data

5.2.1 Carrier Radiated Power & Radiated Spurious Emissions

Test Requirement: FCC CFR 47 Part 15.236 (d) (1)

Test Method: EIA/TIA 603-D:2010 section 2.2,
FCC CFR 47 Part 2.1047 & 1053

Measurement Distance: 3m (Semi-Anechoic Chamber)

Test Requirement:

(a) For low power auxiliary stations operating in the bands other than those allocated for TV broadcasting, the following technical requirements are imposed.

(b) The occupied bandwidth shall not be greater than that necessary for satisfactory transmission and, in any event, an emission appearing on any discrete frequency outside the authorized band shall be attenuated, at least, $43+10\log_{10}$(mean output power, in watts) dB below the mean output power of the transmitting unit.

(c) For low power auxiliary stations operating in the bands allocated for TV broadcasting, the following technical requirements apply:

(d) The power of the measured unmodulated carrier power at the output of the transmitter power amplifier (antenna input power) may not exceed the following:

(i) 54–72, 76–88, and 174–216 MHz bands—50 mW

(ii) 470–608 and 614–806 MHz bands—250 mW

Test Procedure:

The procedure used was EIA/TIA 603-D:2010. The receiver was scanned from 30MHz to 10times carrier frequency. When an emission was found, the table was rotated to produce the maximum signal strength. An initial pre-scan was performed for in peak detection mode using the receiver. The EUT was measured for both the Horizontal and Vertical polarities and performed a pre-test three orthogonal planes. The field strength is calculated by adding the Antenna Factor, Cable Factor & Peramplifier. The basic equation with a sample calculation is as follows:

Final Test Level =Receiver Reading+Antenna Factor+Cable Factor–Peramlifer Factor

An initial pre-scan was performed in the 3m chamber using the spectrum analyser in peak detection mode. Quasi-peak measurements were conducted based on the peak sweep graph. The EUT was measured by Bilog antenna with 2 orthogonal polarities. Remove the EUT and replace it with substitution antenna. A signal generator was connected to the substitution antenna by a non-radiating cable. The absolute levels of the Carrier Radiated Power and spurious emissions were measured by the substitution.

The report refers only to the sample tested and does not apply to the bulk.
This report is issued in confidence to the client and it will be strictly treated as such by the SHENZHEN TIMEWAY TESTING LABORATORIES. It may not be reproduced rather in its entirety or in part and it may not be used for adverting. The client to whom the report is issued may, however, show or send it . or a certified copy there of prepared by the SHENZHEN TIMEWAY TESTING LABORATORIES. to his customer. Supplier or others persons directly concerned. SHENZHEN TIMEWAY TESTING LABORATORIES. will not, without the consent of the client enter into any discussion of correspondence with any third party concerning the contents of the report.
In the event of the improper use of the report. The SHENZHEN TIMEWAY TESTING LABORATORIES. reserves the rights to withdraw it and to adopt any other remedies which may be appropriate.

Block diagram of Test setup

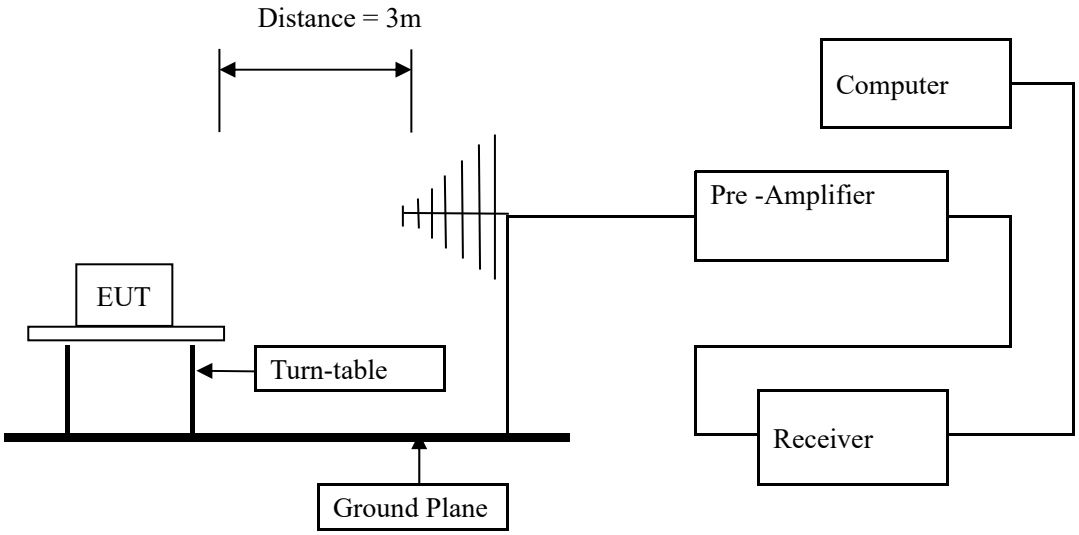

Test Result:

Carrier Frequency (MHz)	**Factual Level dBm (mW)**	**Limit in** 15.236 (d) (1)
76.8	4.36dBm (i.e. 2.73 mW)	17dBm (i.e. 50 mW)
82.8	4.50dBm (i.e. 2.82 mW)	17dBm (i.e. 50 mW)
87.8	4.43dBm (i.e. 2.77 mW)	17dBm (i.e. 50 mW)

The Factual Level is ERP value.

The report refers only to the sample tested and does not apply to the bulk.
This report is issued in confidence to the client and it will be strictly treated as such by the SHENZHEN TIMEWAY TESTING LABORATORIES. It may not be reproduced rather in its entirety or in part and it may not be used for adverting. The client to whom the report is issued may, however, show or send it . or a certified copy there of prepared by the SHENZHEN TIMEWAY TESTING LABORATORIES. to his customer. Supplier or others persons directly concerned. SHENZHEN TIMEWAY TESTING LABORATORIES. will not, without the consent of the client enter into any discussion of correspondence with any third party concerning the contents of the report.
In the event of the improper use of the report. The SHENZHEN TIMEWAY TESTING LABORATORIES. reserves the rights to withdraw it and to adopt any other remedies which may be appropriate.

Radiated spurious emissions:

Spurious Emission Frequency (MHz)	Factual Level Vertical (dBm)	Factual Level Horizontal (dBm)	Limit (dBm)	Min Margin (dB)
76.8MHz				
153.402	-53.29	-46.95	-13.0	-33.95
230.255	-50.16	-40.29	-13.0	-27.29
307.108	-55.69	-52.69	-13.0	-39.69
383.962	-56.17	-53.11	-13.0	-40.11
460.815	-57.03	-55.67	-13.0	-42.67
82.8MHz				
165.608	-52.72	-46.43	-13.0	-33.43
248.421	-49.67	-40.06	-13.0	-27.06
331.232	-53.67	-51.63	-13.0	-38.63
414.039	-54.56	-52.38	-13.0	-39.38
496.825	-56.15	-55.09	-13.0	-42.09
87.8MHz				
175.609	-53.49	-47.16	-13.0	-34.16
263.416	-49.73	-40.12	-13.0	-27.12
351.229	-55.39	-52.36	-13.0	-39.36
4390.23	-56.33	-52.89	-13.0	-39.89
526.812	-56.34	-55.21	-13.0	-42.21

The Factual Level is ERP value.

The peak emission of other frequency in rang from 30MHz up to 10 times carrier were 25dB lower than the limit, hence no data was recorded in the report.

TEST RESULTS: The unit does meet the FCC requirements.

The report refers only to the sample tested and does not apply to the bulk.
This report is issued in confidence to the client and it will be strictly treated as such by the SHENZHEN TIMEWAY TESTING LABORATORIES. It may not be reproduced rather in its entirety or in part and it may not be used for adverting. The client to whom the report is issued may, however, show or send it . or a certified copy there of prepared by the SHENZHEN TIMEWAY TESTING LABORATORIES. to his customer. Supplier or others persons directly concerned. SHENZHEN TIMEWAY TESTING LABORATORIES. will not, without the consent of the client enter into any discussion of correspondence with any third party concerning the contents of the report.
In the event of the improper use of the report. The SHENZHEN TIMEWAY TESTING LABORATORIES. reserves the rights to withdraw it and to adopt any other remedies which may be appropriate.

5.2.2 Occupied Bandwidth and Emissions Mask

Test Requirement: FCC CFR 47 Part 15.236. (f) (2) & (g)

Test Method: ETSI EN 300 422-1 V1.4.2 (2011-08)

The arrangement of test equipment as shown in figure B.1 shall be used. Note that the noise meter conforms to (quasi peak) without weighting filter (flat).

With the Low Frequency (LF) audio signal generator set to 500 Hz, the audio input level to the EUT shall be adjusted to 8 dB below the limiting threshold (-8 dB (lim)) as declared by the manufacturer.

The corresponding audio output level from the demodulator shall be measured and recorded.

The input impedance of the noise meter shall be sufficiently high to avoid more than 0,1 dB change in input level when the meter is switched between input and output.

The audio input level shall be increased by 20 dB, i.e. to +12 dB (lim), and the corresponding change in output level shall be measured.

It shall be checked that the audio output level has increased by ≤ 10 dB.

If this condition is not met, the initial audio input level shall be increased from -8 dB (lim) in 1 dB steps until the above condition is fulfilled, and the input level recorded in the test report. This level replaces the value derived from the manufacturer's declaration and is defined as -8 dB (lim).

Measure the input level at the transmitter required to give +12 dB (lim).

The LF generator shall be replaced with the weighted noise source to ITU-R Recommendation BS.559-2 [1], band-limited to 15 kHz as described in IEC 60244-13 [2], and the level shall be adjusted such that the measured input to the transmitter corresponds to +12 dB (lim).

If the transmitter incorporates any ancillary coding or signalling channels (e.g. pilot-tones), these shall be enabled prior to any spectral measurements.

If the transmitter incorporates more than one audio input, e.g. stereo systems, the second and subsequent channels shall be simultaneously driven from the same noise source, attenuated to a level of -6 dB (lim).

The report refers only to the sample tested and does not apply to the bulk.
This report is issued in confidence to the client and it will be strictly treated as such by the SHENZHEN TIMEWAY TESTING LABORATORIES. It may not be reproduced rather in its entirety or in part and it may not be used for adverting. The client to whom the report is issued may, however, show or send it . or a certified copy there of prepared by the SHENZHEN TIMEWAY TESTING LABORATORIES. to his customer. Supplier or others persons directly concerned. SHENZHEN TIMEWAY TESTING LABORATORIES. will not, without the consent of the client enter into any discussion of correspondence with any third party concerning the contents of the report.
In the event of the improper use of the report. The SHENZHEN TIMEWAY TESTING LABORATORIES. reserves the rights to withdraw it and to adopt any other remedies which may be appropriate.

The transmitter RF output spectrum shall be measured, using a spectrum analyzer with following settings:

1) Center frequency: fc Transmitter (Tx) nominal frequency
2) Dispersion(Span): fc-1MHz to fc+1MHz;
3) Resolution Bandwidth (RBW): 1kHz;
4) Video Bandwidth(VBW): 1kHz;
5) Detector: Peak hold.

Annex B (normative): Measurement of Necessary Bandwidth (BN) for analogue systems

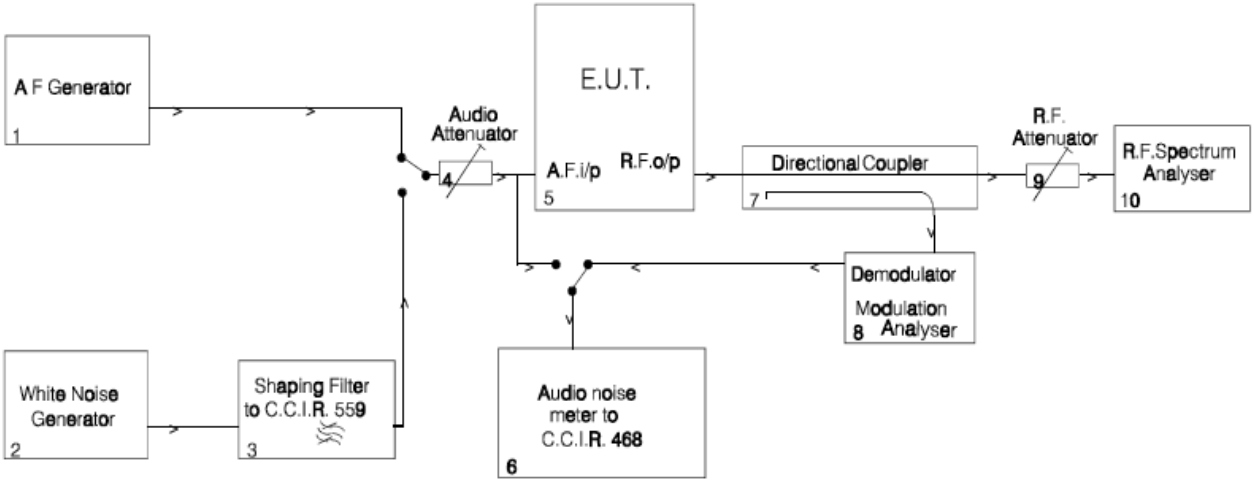

NOTE: If the EUT incorporates ancillary coding or signalling channels, for example, pilot tone, etc. these should be switched on prior to measuring the transmitter RF output spectrum.

Figure B.1

The report refers only to the sample tested and does not apply to the bulk.
This report is issued in confidence to the client and it will be strictly treated as such by the SHENZHEN TIMEWAY TESTING LABORATORIES. It may not be reproduced rather in its entirety or in part and it may not be used for adverting. The client to whom the report is issued may, however, show or send it . or a certified copy there of prepared by the SHENZHEN TIMEWAY TESTING LABORATORIES. to his customer. Supplier or others persons directly concerned. SHENZHEN TIMEWAY TESTING LABORATORIES. will not, without the consent of the client enter into any discussion of correspondence with any third party concerning the contents of the report.
In the event of the improper use of the report. The SHENZHEN TIMEWAY TESTING LABORATORIES. reserves the rights to withdraw it and to adopt any other remedies which may be appropriate.

Input 2500Hz signal to the microphone, find the 50% rated deviation, add the level 16dB, test this status the 99% occupied bandwidth and record it.

Test Result: The graph as below, represents the emissions take for this device.
Occupied Bandwidth (99% of total power): 76 kHz.

82.8MHz

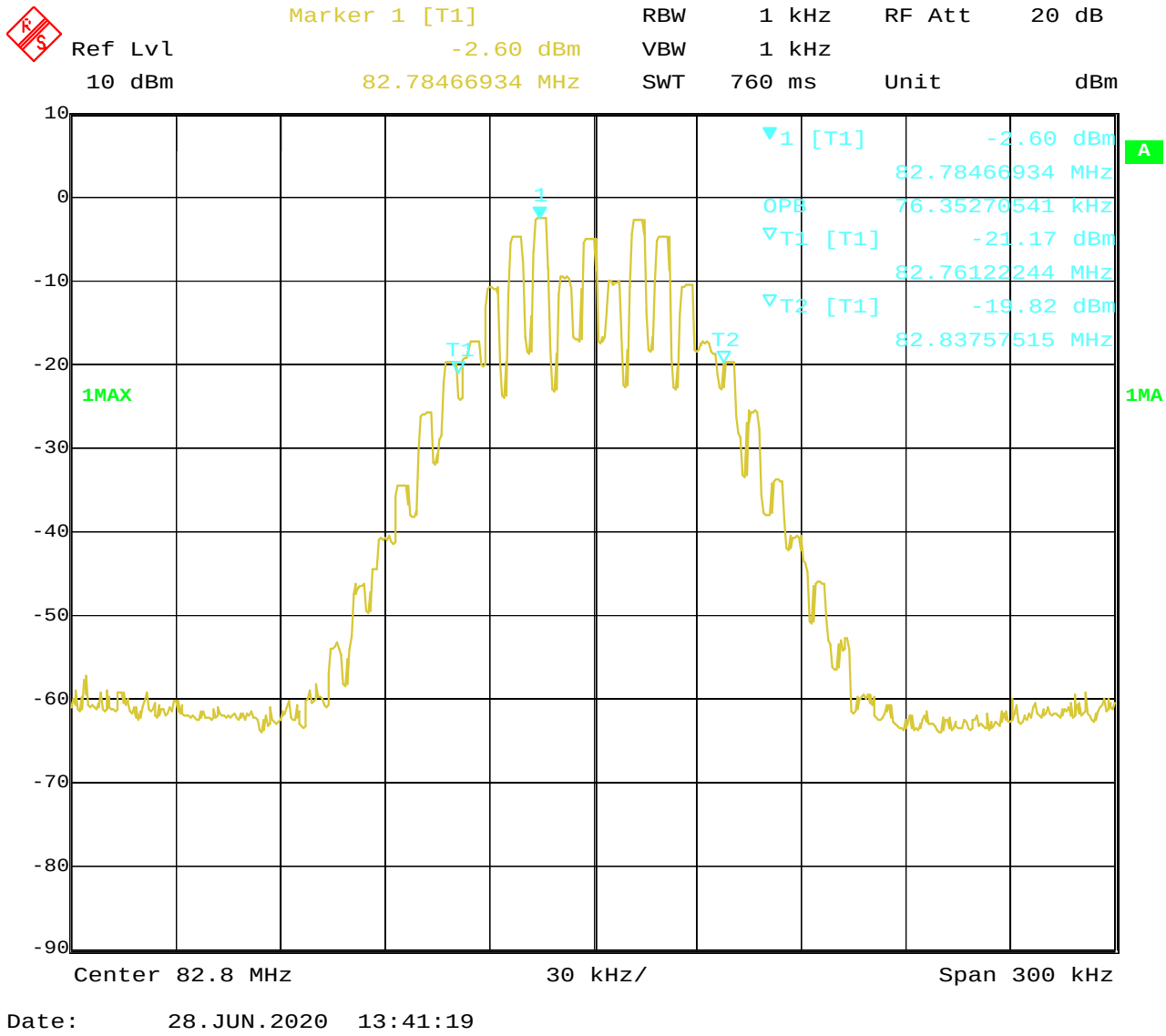

The report refers only to the sample tested and does not apply to the bulk.
This report is issued in confidence to the client and it will be strictly treated as such by the SHENZHEN TIMEWAY TESTING LABORATORIES. It may not be reproduced rather in its entirety or in part and it may not be used for adverting. The client to whom the report is issued may, however, show or send it . or a certified copy there of prepared by the SHENZHEN TIMEWAY TESTING LABORATORIES. to his customer. Supplier or others persons directly concerned. SHENZHEN TIMEWAY TESTING LABORATORIES. will not, without the consent of the client enter into any discussion of correspondence with any third party concerning the contents of the report.
In the event of the improper use of the report. The SHENZHEN TIMEWAY TESTING LABORATORIES. reserves the rights to withdraw it and to adopt any other remedies which may be appropriate.

Emission Mask:

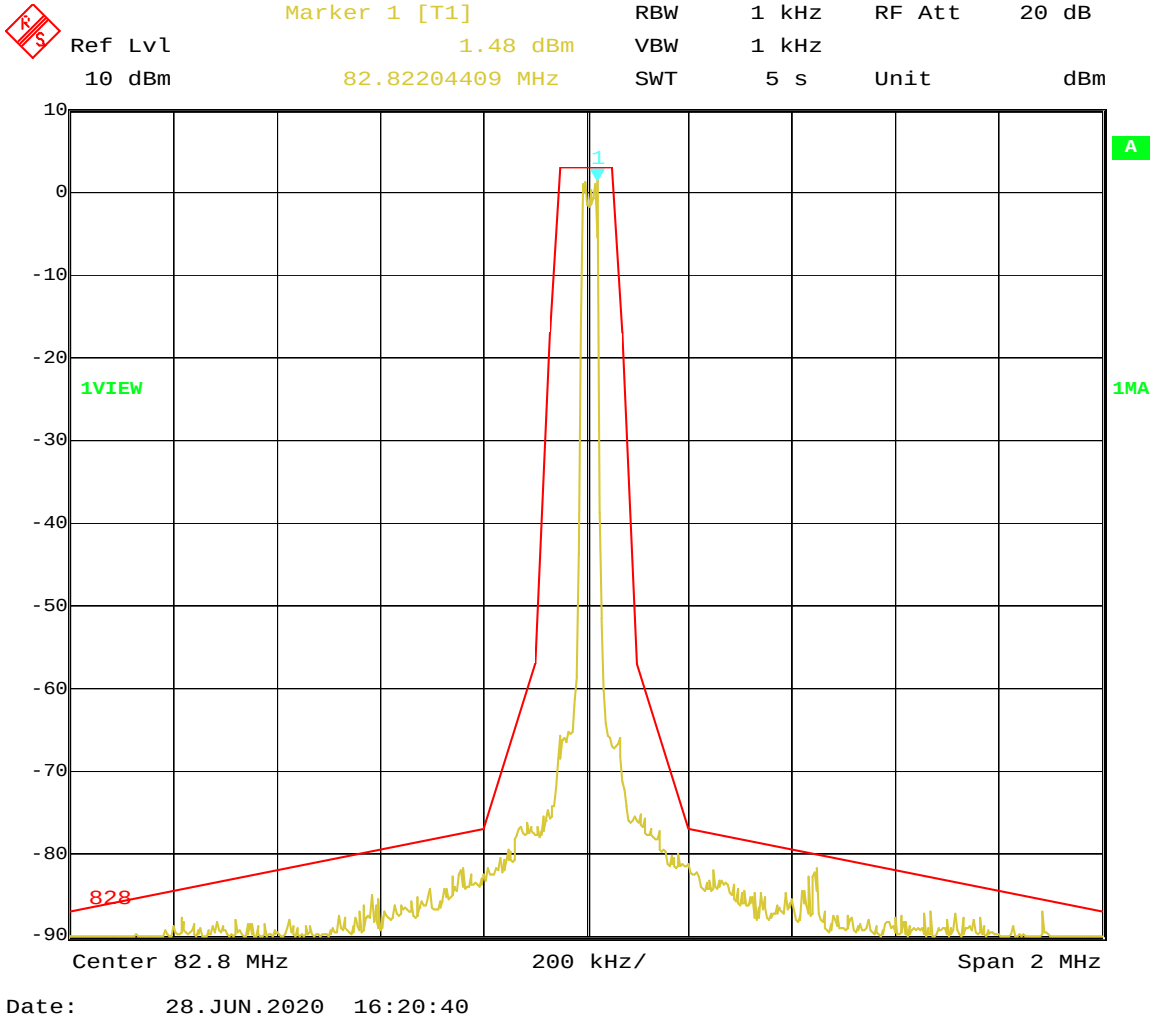

Test results: The unit does meet the FCC requirements.

The report refers only to the sample tested and does not apply to the bulk.
This report is issued in confidence to the client and it will be strictly treated as such by the SHENZHEN TIMEWAY TESTING LABORATORIES. It may not be reproduced rather in its entirety or in part and it may not be used for adverting. The client to whom the report is issued may, however, show or send it . or a certified copy there of prepared by the SHENZHEN TIMEWAY TESTING LABORATORIES. to his customer. Supplier or others persons directly concerned. SHENZHEN TIMEWAY TESTING LABORATORIES. will not, without the consent of the client enter into any discussion of correspondence with any third party concerning the contents of the report.
In the event of the improper use of the report. The SHENZHEN TIMEWAY TESTING LABORATORIES. reserves the rights to withdraw it and to adopt any other remedies which may be appropriate.

5.2.3 Frequency Stability

Test Requirement: FCC CFR 47 Part 15.236. (f) (3)

Test Method: FCC CFR 47 Part 2.1055

Requirements: +/-50 ppm

(e) For low power auxiliary stations operating in the bands allocated for TV broadcasting, the following technical requirements apply:

(4) The frequency tolerance of the transmitter shall be 0.005 percent.

Test Procedure:

Frequency stability versus Environmental Temperature

The equipment under test was connected to an external DC power supply and the RF output was connected to a frequency counter via feed through attenuators. The EUT was placed inside the temperature chamber. After the temperature stabilized for approximately 20 minutes, the frequency of the output signal was recorded from the counter.

Frequency Stability versus Input Voltage

At room temperature (25 ± 5°C), an external variable DC power supply was connected to the EUT. The frequency of the transmitter was measured for 115%, 100% and 85% of the nominal operating input voltage. For hand carried, battery powered equipment, reduce primary supply voltage to the battery operating end point which shall be specified by the manufacturer.

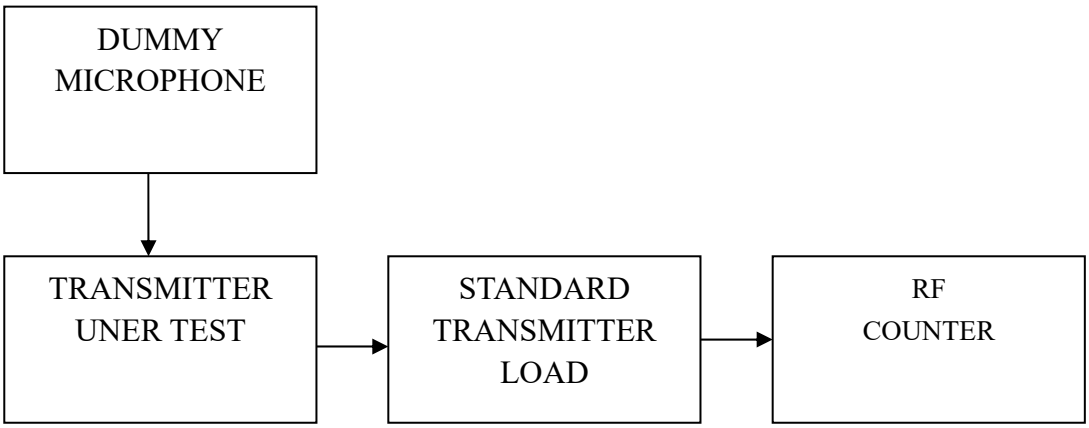

The report refers only to the sample tested and does not apply to the bulk.
This report is issued in confidence to the client and it will be strictly treated as such by the SHENZHEN TIMEWAY TESTING LABORATORIES. It may not be reproduced rather in its entirety or in part and it may not be used for adverting. The client to whom the report is issued may, however, show or send it . or a certified copy there of prepared by the SHENZHEN TIMEWAY TESTING LABORATORIES. to his customer. Supplier or others persons directly concerned. SHENZHEN TIMEWAY TESTING LABORATORIES. will not, without the consent of the client enter into any discussion of correspondence with any third party concerning the contents of the report.
In the event of the improper use of the report. The SHENZHEN TIMEWAY TESTING LABORATORIES. reserves the rights to withdraw it and to adopt any other remedies which may be appropriate.

Test Result:

Assigned Frequency: 82.8 MHz,		
Environment Temperature (°C)	Power Supplied (Vdc)	Frequency Measure with Time Elapsed Total emission within +/- 4.14kHz
50	7.4	+2.3
40	7.4	+1.8
30	7.4	+1.9
20	7.4	+1.8
10	7.4	+1.6
0	7.4	+1.7
-10	7.4	+2.0
-20	7.4	+1.9
Environment Temperature (°C)	Power Supplied (Vdc)	Frequency Measure with Time Elapsed Total emission within Max +/- 4.14 kHz
25	7.4	+1.8
25	8.4	+2.0
25	6.6	+2.2
25	6.0	+2.2

Battery end point: 6.0Vdc

The results: The unit does meet the FCC requirements.

The report refers only to the sample tested and does not apply to the bulk.
This report is issued in confidence to the client and it will be strictly treated as such by the SHENZHEN TIMEWAY TESTING LABORATORIES. It may not be reproduced rather in its entirety or in part and it may not be used for adverting. The client to whom the report is issued may, however, show or send it . or a certified copy there of prepared by the SHENZHEN TIMEWAY TESTING LABORATORIES. to his customer. Supplier or others persons directly concerned. SHENZHEN TIMEWAY TESTING LABORATORIES. will not, without the consent of the client enter into any discussion of correspondence with any third party concerning the contents of the report.
In the event of the improper use of the report. The SHENZHEN TIMEWAY TESTING LABORATORIES. reserves the rights to withdraw it and to adopt any other remedies which may be appropriate.

5.2.4 Power Line Conducted Emission Test

5.2.4.1 Schematics of the test

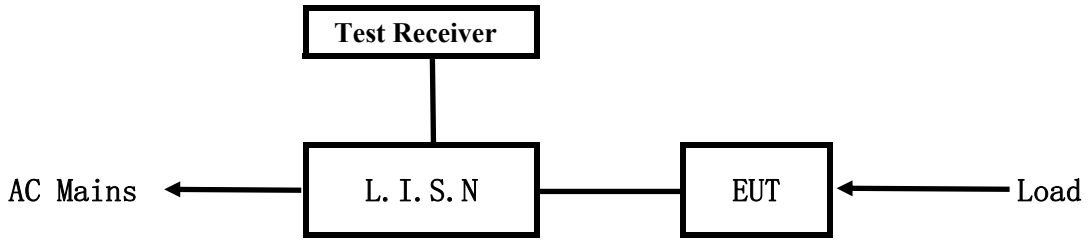

EUT: Equipment Under Test

5.2.4.2 Test Method and test Procedure

The EUT was tested according to ANSI C63.10-2013.The Frequency spectrum From 0.15MHz to 30MHz was investigated. The LISN used was 50ohm/50uH as specified by section 5.1 of ANSI C63.10–2013.

Test Voltage: 120V~60Hz

Block diagram of Test setup

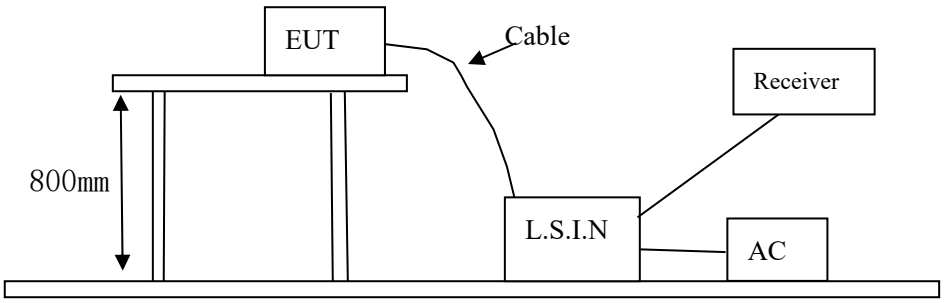

5.2.4.3 Configuration of The EUT

The EUT was configured according to ANSI C63.10-2013. All interface ports were connected to the appropriate peripherals. All peripherals and cables are listed below.

The report refers only to the sample tested and does not apply to the bulk.
This report is issued in confidence to the client and it will be strictly treated as such by the SHENZHEN TIMEWAY TESTING LABORATORIES. It may not be reproduced rather in its entirety or in part and it may not be used for adverting. The client to whom the report is issued may, however, show or send it . or a certified copy there of prepared by the SHENZHEN TIMEWAY TESTING LABORATORIES. to his customer. Supplier or others persons directly concerned. SHENZHEN TIMEWAY TESTING LABORATORIES. will not, without the consent of the client enter into any discussion of correspondence with any third party concerning the contents of the report.
In the event of the improper use of the report. The SHENZHEN TIMEWAY TESTING LABORATORIES. reserves the rights to withdraw it and to adopt any other remedies which may be appropriate.

A. EUT

Device	Manufacturer	Model	FCC ID
Bone Conduction Wireless Teaching System	Shenzhen HXD Electrics Co., Ltd.	H-900A, H-910B	2AWHD-H-900

B. Internal Device

Device	Manufacturer	Model	Rating

C. Peripherals

Device	Manufacturer	Model	Cable
Power Supply	JDY	JDY0500150V U1	Input:100-240V~, 50/60Hz, 0.2A, Output: DC5V, 1.5A

5.2.4.4 EUT Operating Condition

Operating condition is according to ANSI C63.10-2013.

A Setup the EUT and simulators as shown on follow

B Enable AF signal and confirm EUT active to normal condition

5.2.4.5 Power line conducted Emission Limit according to Paragraph 15.107 ,15.207

Frequency (MHz)	Class A Limits (dB μ V)		Class B Limits (dB μ V)	
	Quasi-peak Level	Average Level	Quasi-peak Level	Average Level
0.15 ～ 0.50	79.0	66.0	66.0～56.0*	56.0～46.0*
0.50 ～ 5.00	73.0	60.0	56.0	46.0
5.00 ～ 30.00	73.0	60.0	60.0	50.0

Notes: 1. *Decreasing linearly with logarithm of frequency.

2. The tighter limit shall apply at the transition frequencies

5.2.4.6 Test Results

The frequency spectrum from 0.15MHz to 30MHz was investigated. All reading are quasi-peak values with a resolution bandwidth of 9kHz.

The report refers only to the sample tested and does not apply to the bulk.
This report is issued in confidence to the client and it will be strictly treated as such by the SHENZHEN TIMEWAY TESTING LABORATORIES. It may not be reproduced rather in its entirety or in part and it may not be used for adverting. The client to whom the report is issued may, however, show or send it . or a certified copy there of prepared by the SHENZHEN TIMEWAY TESTING LABORATORIES. to his customer. Supplier or others persons directly concerned. SHENZHEN TIMEWAY TESTING LABORATORIES. will not, without the consent of the client enter into any discussion of correspondence with any third party concerning the contents of the report.
In the event of the improper use of the report. The SHENZHEN TIMEWAY TESTING LABORATORIES. reserves the rights to withdraw it and to adopt any other remedies which may be appropriate.

A: Conducted Emission on Live Terminal (150kHz to 30MHz)

EUT Operating Environment

Temperature: 26℃ Humidity: 65%RH Atmospheric Pressure: 101 KPa

EUT set Condition: Charging and Keep Transmitting

Equipment Level: Class B

Results: PASS

Please refer to following diagram for individual

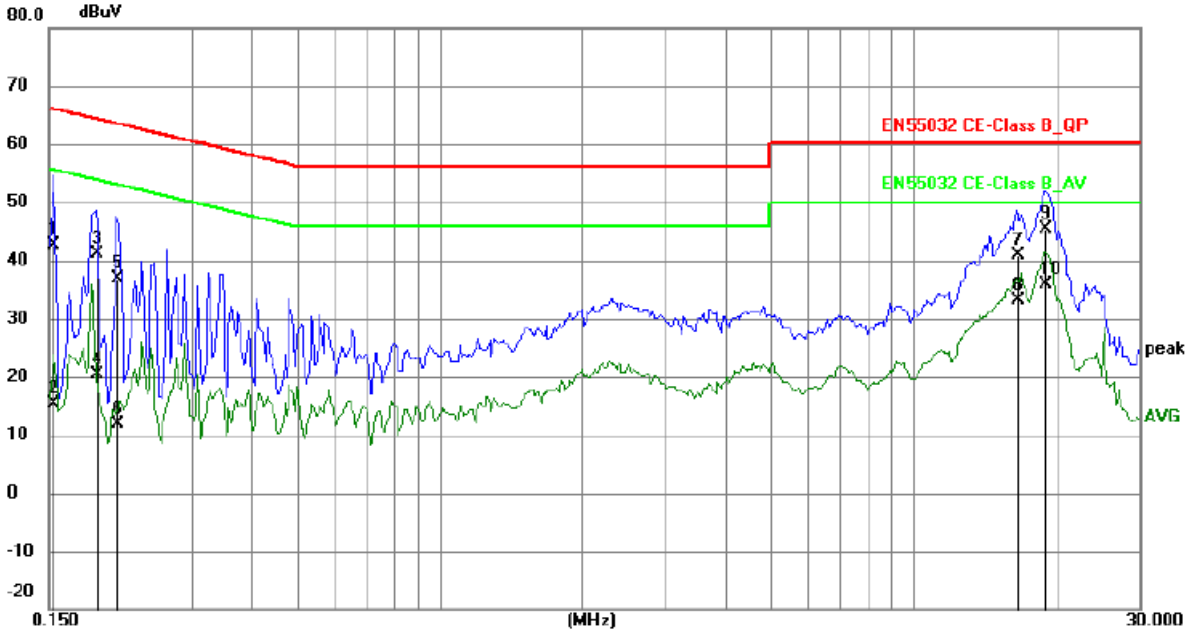

No.	Frequency (MHz)	Reading (dBuV)	Factor (dB)	Level (dBuV)	Limit (dBuV)	Margin (dB)	Detector	P/F
1	0.1539	32.95	9.78	42.73	65.79	-23.06	QP	P
2	0.1539	5.65	9.78	15.43	55.79	-40.36	AVG	P
3	0.1890	31.29	9.76	41.05	64.08	-23.03	QP	P
4	0.1890	10.55	9.76	20.31	54.08	-33.77	AVG	P
5	0.2085	27.17	9.75	36.92	63.26	-26.34	QP	P
6	0.2085	2.02	9.75	11.77	53.26	-41.49	AVG	P
7	16.4940	30.38	10.47	40.85	60.00	-19.15	QP	P
8	16.4940	22.59	10.47	33.06	50.00	-16.94	AVG	P
9	19.0095	34.82	10.62	45.44	60.00	-14.56	QP	P
10	19.0095	25.22	10.62	35.84	50.00	-14.16	AVG	P

The report refers only to the sample tested and does not apply to the bulk.
This report is issued in confidence to the client and it will be strictly treated as such by the SHENZHEN TIMEWAY TESTING LABORATORIES. It may not be reproduced rather in its entirety or in part and it may not be used for adverting. The client to whom the report is issued may, however, show or send it . or a certified copy there of prepared by the SHENZHEN TIMEWAY TESTING LABORATORIES. to his customer. Supplier or others persons directly concerned. SHENZHEN TIMEWAY TESTING LABORATORIES. will not, without the consent of the client enter into any discussion of correspondence with any third party concerning the contents of the report.
In the event of the improper use of the report. The SHENZHEN TIMEWAY TESTING LABORATORIES. reserves the rights to withdraw it and to adopt any other remedies which may be appropriate.

B: Conducted Emission on Neutral Terminal (150kHz to 30MHz)

EUT Operating Environment

Temperature: 26℃ Humidity: 65%RH Atmospheric Pressure: 101 KPa

EUT set Condition: Charging and Keep Transmitting

Equipment Level: Class B

Results: Pass

Please refer to following diagram for individual

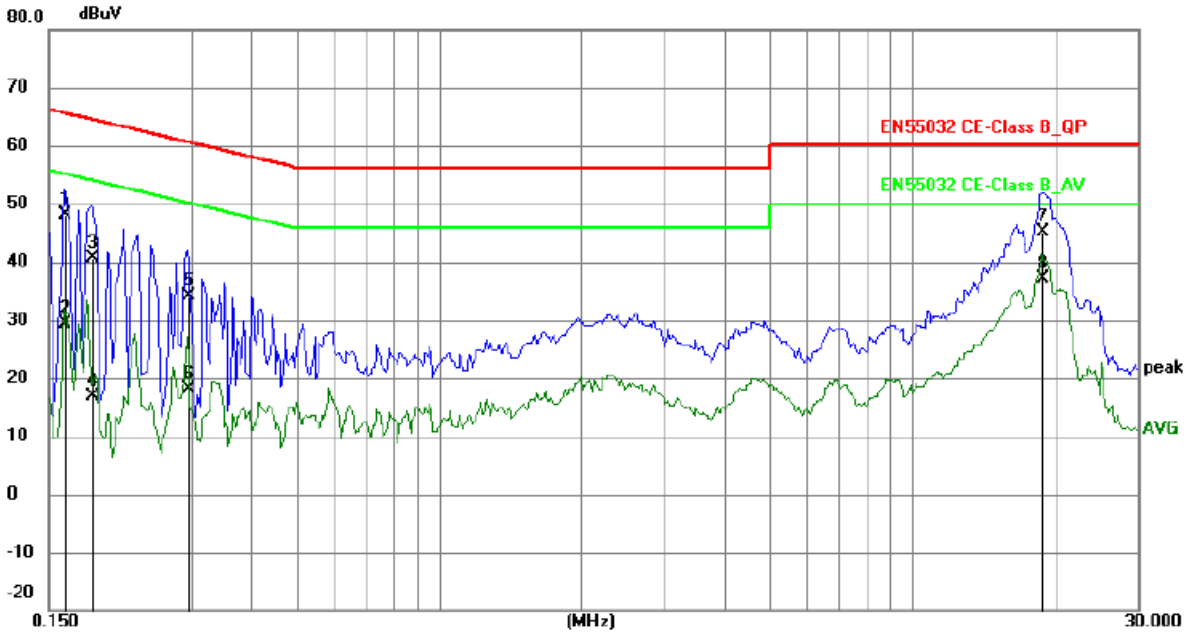

No.	Frequency (MHz)	Reading (dBuV)	Factor (dB)	Level (dBuV)	Limit (dBuV)	Margin (dB)	Detector	P/F
1	0.1617	38.39	9.78	48.17	65.38	-17.21	QP	P
2	0.1617	19.60	9.78	29.38	55.38	-26.00	AVG	P
3	0.1850	30.90	9.76	40.66	64.26	-23.60	QP	P
4	0.1850	7.20	9.76	16.96	54.26	-37.30	AVG	P
5	0.2943	24.44	9.76	34.20	60.40	-26.20	QP	P
6	0.2943	8.26	9.76	18.02	50.40	-32.38	AVG	P
7	18.8028	34.56	10.61	45.17	60.00	-14.83	QP	P
8	18.8028	26.54	10.61	37.15	50.00	-12.85	AVG	P

The report refers only to the sample tested and does not apply to the bulk.
This report is issued in confidence to the client and it will be strictly treated as such by the SHENZHEN TIMEWAY TESTING LABORATORIES. It may not be reproduced rather in its entirety or in part and it may not be used for adverting. The client to whom the report is issued may, however, show or send it . or a certified copy there of prepared by the SHENZHEN TIMEWAY TESTING LABORATORIES. to his customer. Supplier or others persons directly concerned. SHENZHEN TIMEWAY TESTING LABORATORIES. will not, without the consent of the client enter into any discussion of correspondence with any third party concerning the contents of the report.
In the event of the improper use of the report. The SHENZHEN TIMEWAY TESTING LABORATORIES. reserves the rights to withdraw it and to adopt any other remedies which may be appropriate.

6.0 Antenna Requirement

Applicable Standard

An intentional radiator shall be designed to ensure that no antenna other than that furnished by the responsible party shall be used with the device. The use of a permanently attached antenna or of an antenna that uses a unique coupling to the intentional radiator shall be considered sufficient to comply with the provisions of this section.

This product has a dipole antenna with reverse polarity antenna connector. The antenna gain is 2.0dBi Max. It fulfills the requirement of this section.

Test Result: Pass

The report refers only to the sample tested and does not apply to the bulk.
This report is issued in confidence to the client and it will be strictly treated as such by the SHENZHEN TIMEWAY TESTING LABORATORIES. It may not be reproduced rather in its entirety or in part and it may not be used for adverting. The client to whom the report is issued may, however, show or send it . or a certified copy there of prepared by the SHENZHEN TIMEWAY TESTING LABORATORIES. to his customer. Supplier or others persons directly concerned. SHENZHEN TIMEWAY TESTING LABORATORIES. will not, without the consent of the client enter into any discussion of correspondence with any third party concerning the contents of the report.
In the event of the improper use of the report. The SHENZHEN TIMEWAY TESTING LABORATORIES. reserves the rights to withdraw it and to adopt any other remedies which may be appropriate.

7.0 FCC ID Label

FCC ID: 2AWHD-H-900

This device complies with Part 15 of the FCC Rules. Operation is subject to the following two conditions: (1) this device may not cause harmful interference, and (2) this device must accept any interference received, including interference that may cause undesired operation.

The label must not be a stick-on paper label. The label on these products must be permanently affixed to the product and readily visible at the time of purchase and must last the expected lifetime of the equipment not be readily detachable.

Mark Location:

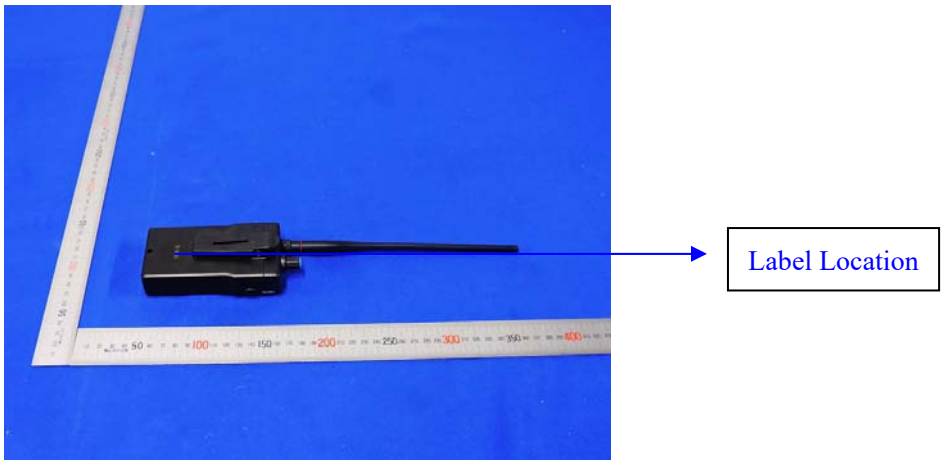

The report refers only to the sample tested and does not apply to the bulk.
This report is issued in confidence to the client and it will be strictly treated as such by the SHENZHEN TIMEWAY TESTING LABORATORIES. It may not be reproduced rather in its entirety or in part and it may not be used for adverting. The client to whom the report is issued may, however, show or send it . or a certified copy there of prepared by the SHENZHEN TIMEWAY TESTING LABORATORIES. to his customer. Supplier or others persons directly concerned. SHENZHEN TIMEWAY TESTING LABORATORIES. will not, without the consent of the client enter into any discussion of correspondence with any third party concerning the contents of the report.
In the event of the improper use of the report. The SHENZHEN TIMEWAY TESTING LABORATORIES. reserves the rights to withdraw it and to adopt any other remedies which may be appropriate.

8.0 Photo of testing

Conducted Emission Test Setup:

The report refers only to the sample tested and does not apply to the bulk.
This report is issued in confidence to the client and it will be strictly treated as such by the SHENZHEN TIMEWAY TESTING LABORATORIES. It may not be reproduced rather in its entirety or in part and it may not be used for adverting. The client to whom the report is issued may, however, show or send it . or a certified copy there of prepared by the SHENZHEN TIMEWAY TESTING LABORATORIES. to his customer. Supplier or others persons directly concerned. SHENZHEN TIMEWAY TESTING LABORATORIES. will not, without the consent of the client enter into any discussion of correspondence with any third party concerning the contents of the report.
In the event of the improper use of the report. The SHENZHEN TIMEWAY TESTING LABORATORIES. reserves the rights to withdraw it and to adopt any other remedies which may be appropriate.

Radiated Emission Test Setup:

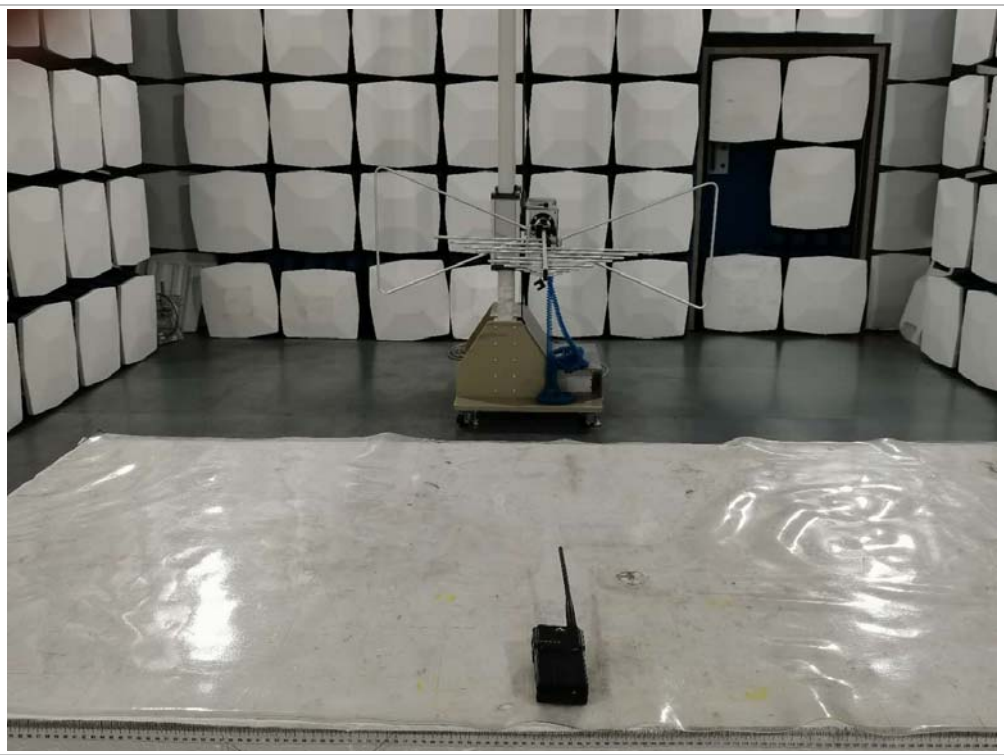

The report refers only to the sample tested and does not apply to the bulk.
This report is issued in confidence to the client and it will be strictly treated as such by the SHENZHEN TIMEWAY TESTING LABORATORIES. It may not be reproduced rather in its entirety or in part and it may not be used for adverting. The client to whom the report is issued may, however, show or send it . or a certified copy there of prepared by the SHENZHEN TIMEWAY TESTING LABORATORIES. to his customer. Supplier or others persons directly concerned. SHENZHEN TIMEWAY TESTING LABORATORIES. will not, without the consent of the client enter into any discussion of correspondence with any third party concerning the contents of the report.
In the event of the improper use of the report. The SHENZHEN TIMEWAY TESTING LABORATORIES. reserves the rights to withdraw it and to adopt any other remedies which may be appropriate.

Photographs – EUT

Outside view

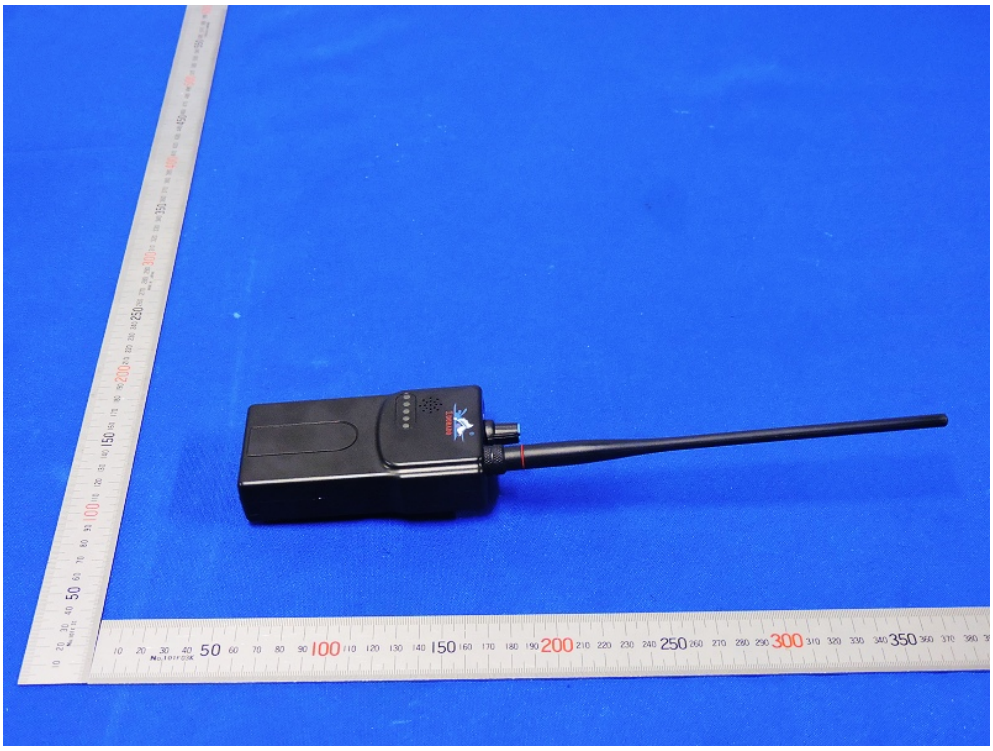

The report refers only to the sample tested and does not apply to the bulk.
This report is issued in confidence to the client and it will be strictly treated as such by the SHENZHEN TIMEWAY TESTING LABORATORIES. It may not be reproduced rather in its entirety or in part and it may not be used for adverting. The client to whom the report is issued may, however, show or send it . or a certified copy there of prepared by the SHENZHEN TIMEWAY TESTING LABORATORIES. to his customer. Supplier or others persons directly concerned. SHENZHEN TIMEWAY TESTING LABORATORIES. will not, without the consent of the client enter into any discussion of correspondence with any third party concerning the contents of the report.
In the event of the improper use of the report. The SHENZHEN TIMEWAY TESTING LABORATORIES. reserves the rights to withdraw it and to adopt any other remedies which may be appropriate.

Outside view

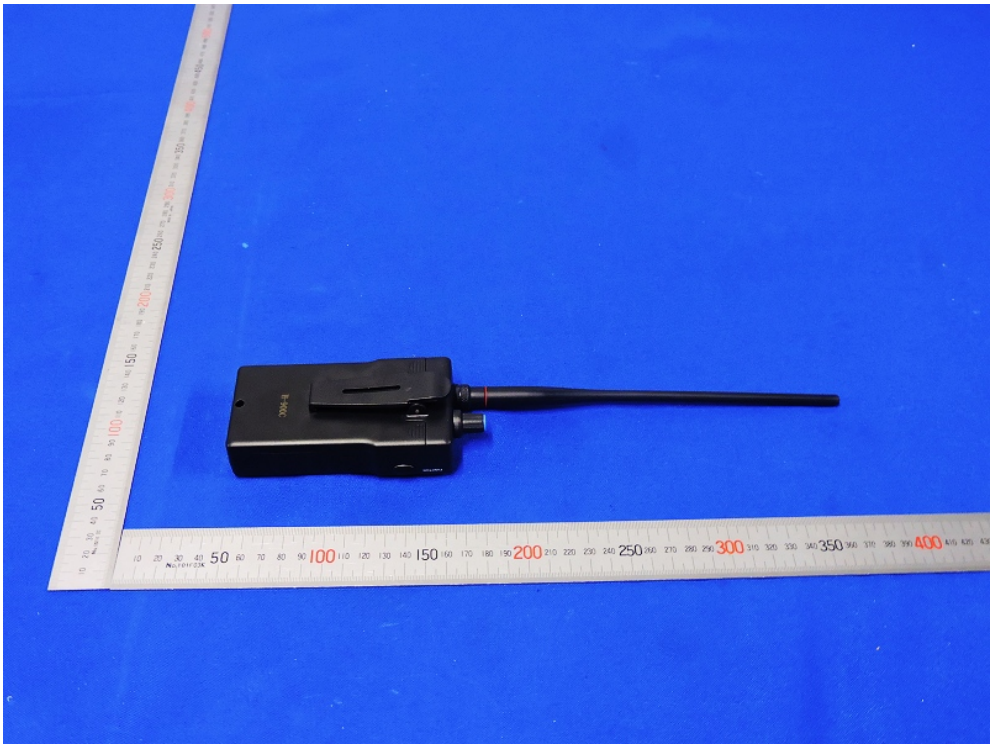

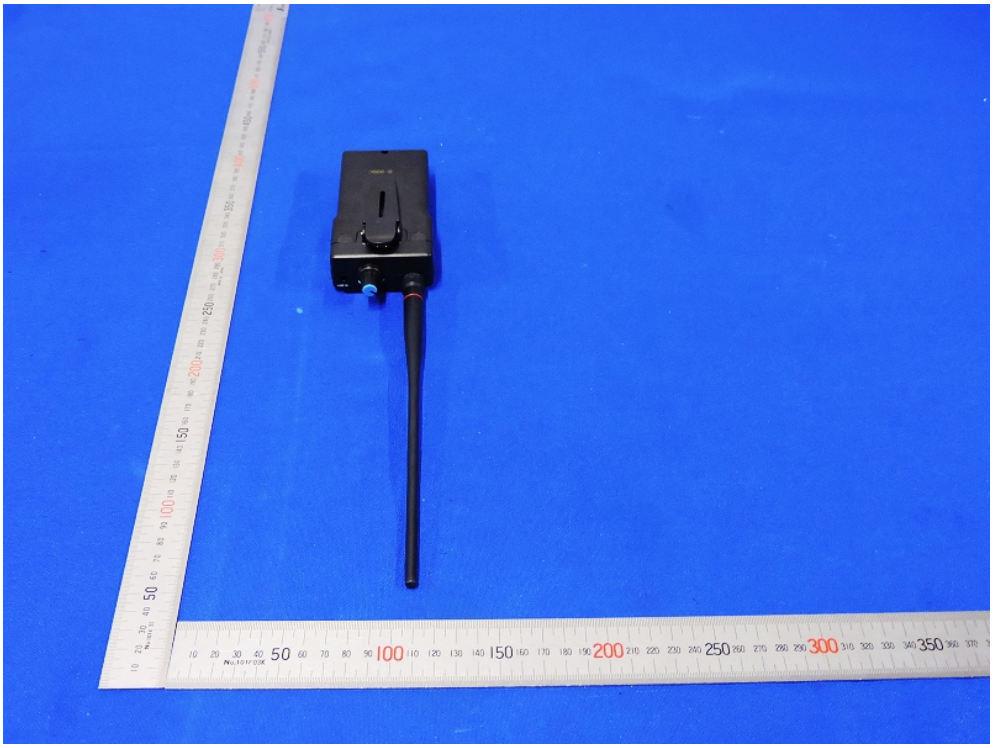

The report refers only to the sample tested and does not apply to the bulk.
This report is issued in confidence to the client and it will be strictly treated as such by the SHENZHEN TIMEWAY TESTING LABORATORIES. It may not be reproduced rather in its entirety or in part and it may not be used for adverting. The client to whom the report is issued may, however, show or send it . or a certified copy there of prepared by the SHENZHEN TIMEWAY TESTING LABORATORIES. to his customer. Supplier or others persons directly concerned. SHENZHEN TIMEWAY TESTING LABORATORIES. will not, without the consent of the client enter into any discussion of correspondence with any third party concerning the contents of the report.
In the event of the improper use of the report. The SHENZHEN TIMEWAY TESTING LABORATORIES. reserves the rights to withdraw it and to adopt any other remedies which may be appropriate.

Outside view

The report refers only to the sample tested and does not apply to the bulk.
This report is issued in confidence to the client and it will be strictly treated as such by the SHENZHEN TIMEWAY TESTING LABORATORIES. It may not be reproduced rather in its entirety or in part and it may not be used for adverting. The client to whom the report is issued may, however, show or send it . or a certified copy there of prepared by the SHENZHEN TIMEWAY TESTING LABORATORIES. to his customer. Supplier or others persons directly concerned. SHENZHEN TIMEWAY TESTING LABORATORIES. will not, without the consent of the client enter into any discussion of correspondence with any third party concerning the contents of the report.
In the event of the improper use of the report. The SHENZHEN TIMEWAY TESTING LABORATORIES. reserves the rights to withdraw it and to adopt any other remedies which may be appropriate.

Inside view

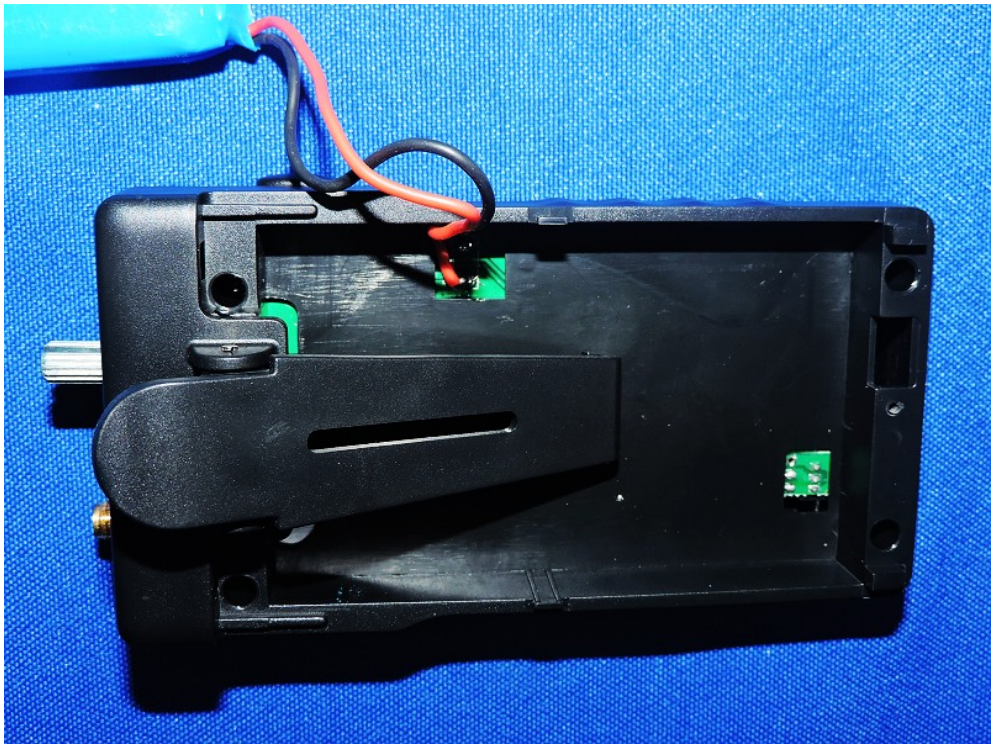

The report refers only to the sample tested and does not apply to the bulk.
This report is issued in confidence to the client and it will be strictly treated as such by the SHENZHEN TIMEWAY TESTING LABORATORIES. It may not be reproduced rather in its entirety or in part and it may not be used for adverting. The client to whom the report is issued may, however, show or send it . or a certified copy there of prepared by the SHENZHEN TIMEWAY TESTING LABORATORIES. to his customer. Supplier or others persons directly concerned. SHENZHEN TIMEWAY TESTING LABORATORIES. will not, without the consent of the client enter into any discussion of correspondence with any third party concerning the contents of the report.
In the event of the improper use of the report. The SHENZHEN TIMEWAY TESTING LABORATORIES. reserves the rights to withdraw it and to adopt any other remedies which may be appropriate.

Inside view

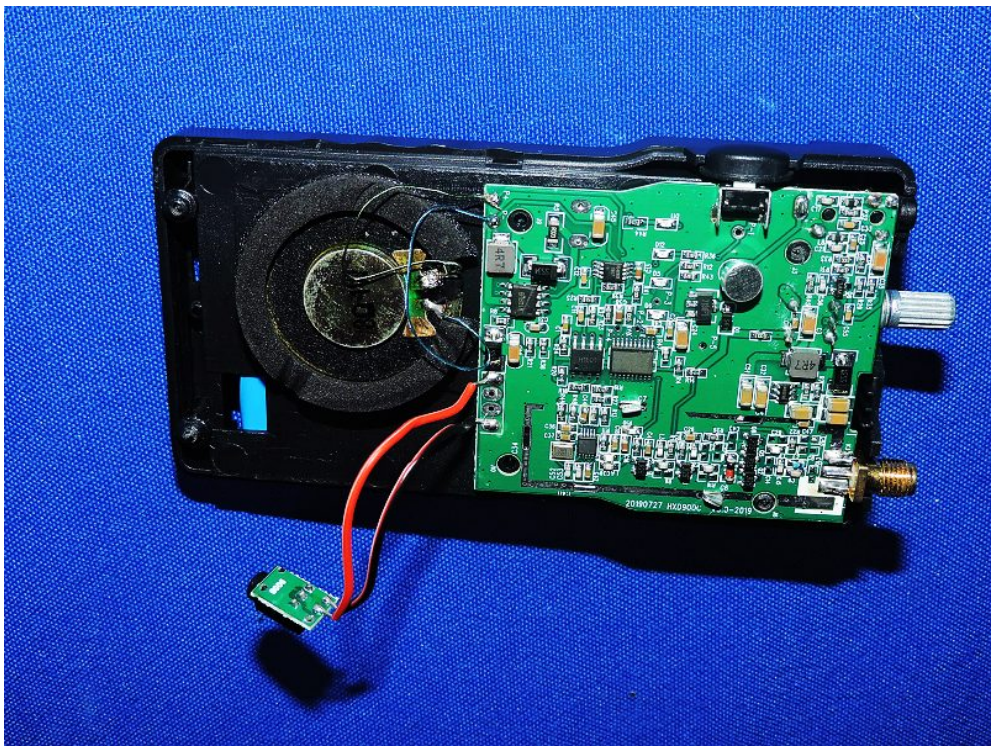

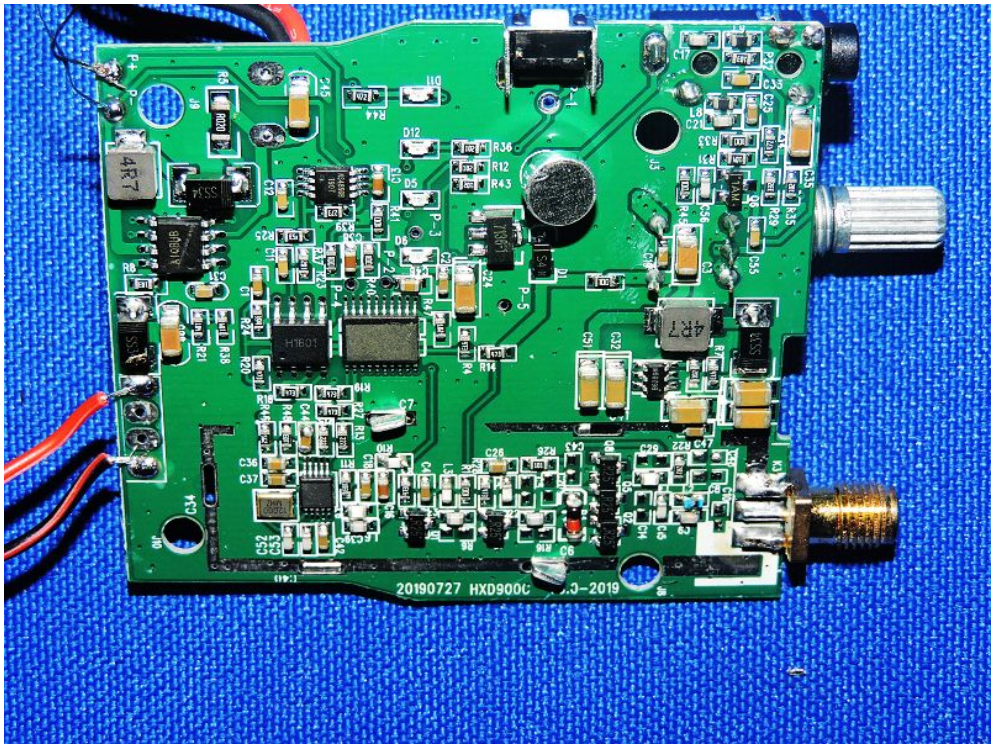

The report refers only to the sample tested and does not apply to the bulk.
This report is issued in confidence to the client and it will be strictly treated as such by the SHENZHEN TIMEWAY TESTING LABORATORIES. It may not be reproduced rather in its entirety or in part and it may not be used for adverting. The client to whom the report is issued may, however, show or send it . or a certified copy there of prepared by the SHENZHEN TIMEWAY TESTING LABORATORIES. to his customer. Supplier or others persons directly concerned. SHENZHEN TIMEWAY TESTING LABORATORIES. will not, without the consent of the client enter into any discussion of correspondence with any third party concerning the contents of the report.
In the event of the improper use of the report. The SHENZHEN TIMEWAY TESTING LABORATORIES. reserves the rights to withdraw it and to adopt any other remedies which may be appropriate.

Inside view

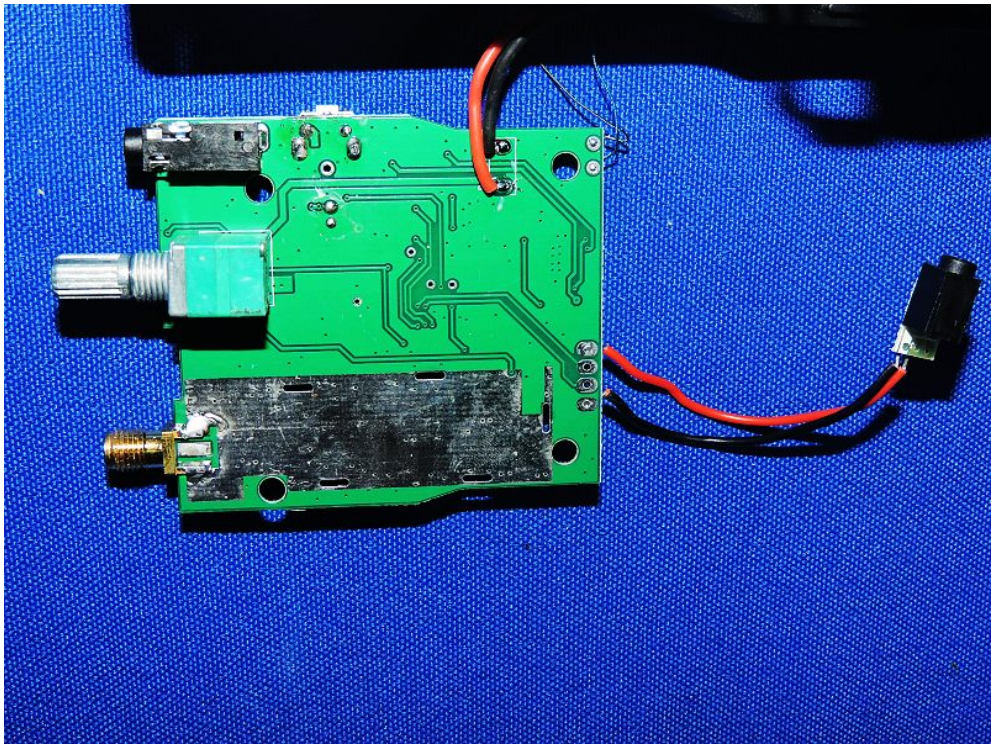

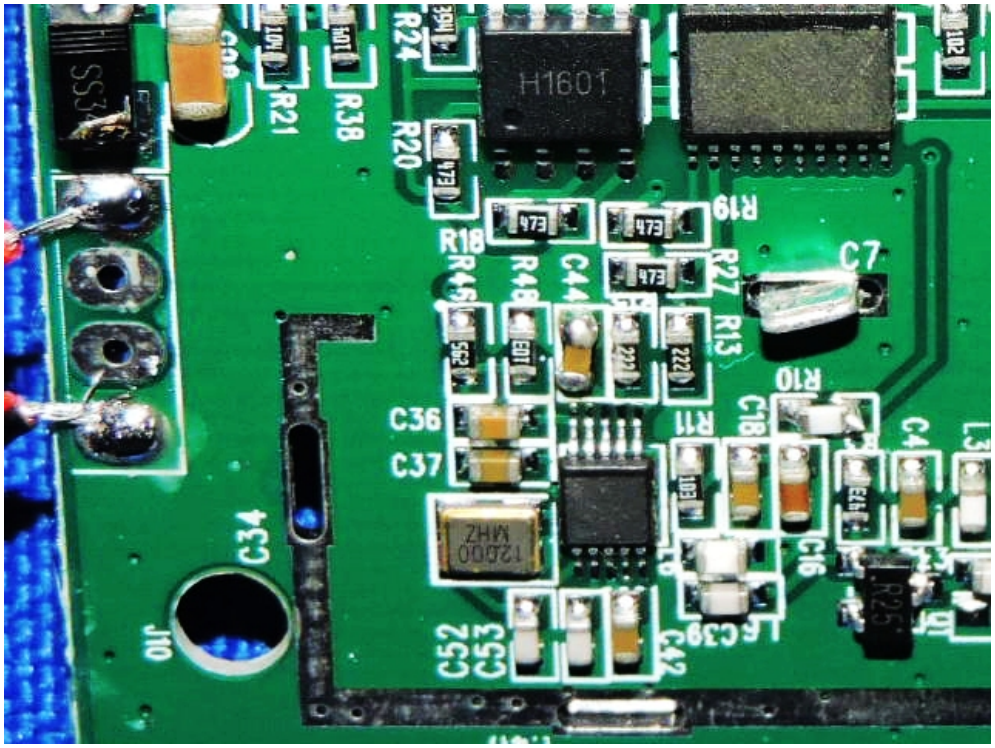

The report refers only to the sample tested and does not apply to the bulk.
This report is issued in confidence to the client and it will be strictly treated as such by the SHENZHEN TIMEWAY TESTING LABORATORIES. It may not be reproduced rather in its entirety or in part and it may not be used for adverting. The client to whom the report is issued may, however, show or send it . or a certified copy there of prepared by the SHENZHEN TIMEWAY TESTING LABORATORIES. to his customer. Supplier or others persons directly concerned. SHENZHEN TIMEWAY TESTING LABORATORIES. will not, without the consent of the client enter into any discussion of correspondence with any third party concerning the contents of the report.
In the event of the improper use of the report. The SHENZHEN TIMEWAY TESTING LABORATORIES. reserves the rights to withdraw it and to adopt any other remedies which may be appropriate.

Inside view

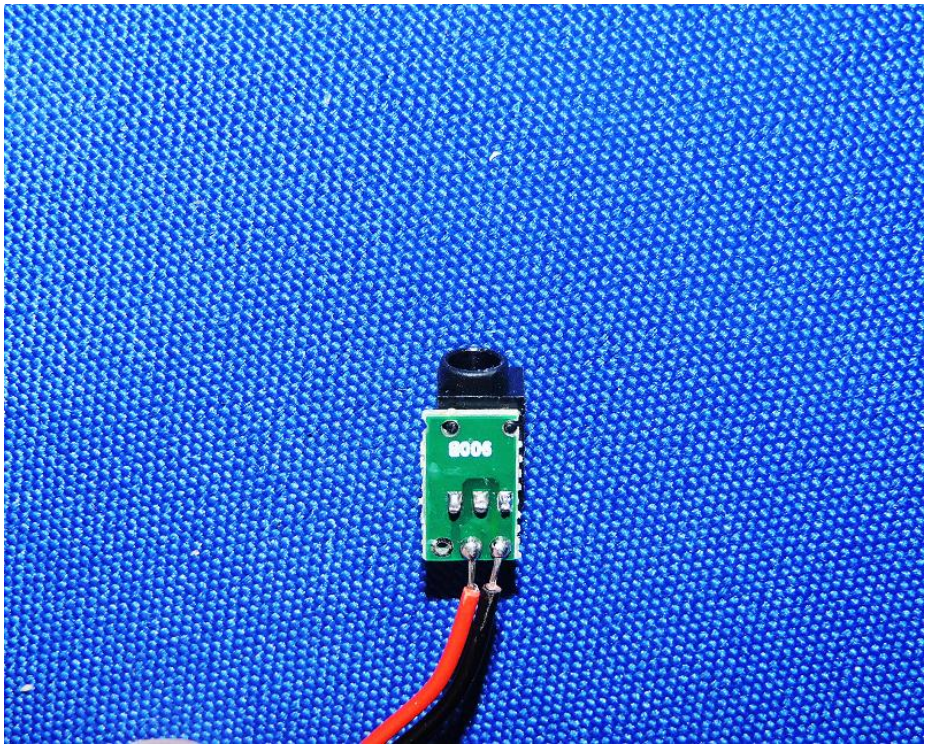

End of Report

The report refers only to the sample tested and does not apply to the bulk.
This report is issued in confidence to the client and it will be strictly treated as such by the SHENZHEN TIMEWAY TESTING LABORATORIES. It may not be reproduced rather in its entirety or in part and it may not be used for adverting. The client to whom the report is issued may, however, show or send it . or a certified copy there of prepared by the SHENZHEN TIMEWAY TESTING LABORATORIES. to his customer. Supplier or others persons directly concerned. SHENZHEN TIMEWAY TESTING LABORATORIES. will not, without the consent of the client enter into any discussion of correspondence with any third party concerning the contents of the report.
In the event of the improper use of the report. The SHENZHEN TIMEWAY TESTING LABORATORIES. reserves the rights to withdraw it and to adopt any other remedies which may be appropriate.