SPAN® Panel

Installation manual

For model numbers beginning with PL7R-

span.io/techportal
This document does not always reflect the latest version.
Refer to Tech Portal for most up-to-date installation Manual.

Version: 11.20.2024

Product specifications

All specifications and descriptions contained in this document are accurate at the time of publication. In the interest of product improvement, SPAN reserves the right to make product modifications at any time without advance notice.

For the latest SPAN product and installation documents, visit: www.span.io/tech-portal.

For errors or omissions, contact: support@span.io.
For complete product specifications and information on product listing and certification, refer to the Product Datasheet at www.span.io.

SPAN assumes no liability for injury or property damage due to installation or service attempted by unqualified individuals, or due to a failure of installers or service technicians to properly follow safety, installation, and service instructions.
© 2024 SPAN.IO, Inc. All rights reserved.

Terms of Service

The SPAN Terms of Service (available at www.span.io/terms-of-service) govern your use of the SPAN platform and products.

Privacy Policy

Span respects your right to privacy and the use of your personal information. Please visit www.span.io/privacy for more information about our data practices.

Trademarks

The following are registered trademarks of SPAN in the United States.
SPAN, SPAN HOME, SPAN INSTALLER, SPAN DRIVE, SPAN Logo

All other trademarks in this document are the property of their respective owners, and their use within does not imply endorsement of their products or services. The unauthorized use of any trademark displayed in this document or on the product is strictly prohibited. Appropriate licenses must be obtained before use.

Electronic device waste removal

Proper disposal of electronic equipment is required. Refer to local codes for disposal requirements. To arrange for proper disposal of this product, contact your local authorities or dealer for proper disposal requirements.

Warranty

To secure the full warranty term under the limited warranty for your SPAN Panel, you must complete the commissioning process in the SPAN Installer® App and create an account in the SPAN Home® App. For complete warranty information, please refer to the SPAN Panel Limited Warranty at www.span.io/panel-limited-warranty. If you would like to request a free copy of the limited warranty terms, please contact customer support at 415-286-5252.span.io/panel-limited-warranty. If you would like to request a free copy of the limited warranty terms, please contact customer support at 415-286-5252.

Important safety instructions

SAVE THESE INSTRUCTIONS
Follow these instructions during installation, maintenance, and operation of the equipment. This section contains safety information that must be observed at all times when working on or using the equipment.

- In case of fire or other emergency:
- If safe to do so, switch-off the main or upstream breaker for the Panel.
- Contact the fire department or other required emergency response team.
- Evacuate the area, and alert others in the area.
- In case of unusual noise, smell, or smoke:
  - Ensure nothing is in contact with the SPAN Panel or other equipment.
  - Ventilate the space.
- Contact your installer or SPAN Customer Support.

Symbols used

These symbols indicate important safety information in the documentation
or on the equipment:

WARNING: Indicates a situation where failure to follow instructions or use proper materials may be a safety hazard that may result in serious injury, loss of life, or destruction of equipment. Use caution and do not proceed until the indicated conditions or required procedures are fully understood and met.

CAUTION: Indicates a situation where failure to follow instructions or use proper materials may be a safety hazard that may result in minor injury or damage to equipment. Do not proceed until the indicated conditions or required procedures are fully understood and met.

NOTE: Indicates an important step, or additional information that highlights best practices or procedures. Follow instructions carefully.

RISK OF ELECTRIC SHOCK: Indicates components that present risk of electric shock.

PROTECTIVE CONDUCTOR TERMINAL: Indicates location of grounding connection on the equipment.

REFER TO INSTRUCTIONS: Indicates that user should refer to operating or installation instructions before proceeding.

ATTENTION: Read all instructions and cautionary markings in this document and on the equipment before installing the SPAN Panel. Failure to do so may result in equipment damage, electric shock, serious injury, or loss of life. Any defect or loss of product functionality resulting from a failure to follow these instructions is excluded under the SPAN Panel Limited Warranty.

All installations must conform to the laws, regulations, codes, and standards applicable in the jurisdiction of installation. Before starting an installation, consult a local building or electrical inspector for current requirements. Local codes may vary but are adopted and enforced to promote safe electrical installations. A permit may be needed to do electrical work, and some codes may require an inspection of the electrical work.

Jurisdiction	Code
United States	National Electrical Code (ANSI/NFPA 70)

General

WARNING: Risk of electric shock. Risk of fire. Only qualified electrical personnel should install, troubleshoot, service, or replace the equipment.
WARNING: Risk of electric shock. Apply appropriate personal protective equipment (PPE), and follow safe electrical work practices during installation and service. Turn off all power supplying this equipment before working on or inside equipment. Always use a properly rated voltage sensing device to confirm power is off. Replace all devices, covers, and doors before turning on power to the equipment.
WARNING: To protect the equipment and its components from damage when transporting, handle with care. To help prevent damage, leave all equipment in its shipping packaging until it is ready to be installed.
WARNING: Inspect the equipment for damage before installing. Do not install the equipment if it has been damaged in any way.
WARNING: Do not insert foreign objects into any part of the equipment.
WARNING: Do not expose the equipment or any of its components to direct flame.
WARNING: Do not attempt to open, disassemble, repair, tamper with, or modify the equipment other than what is permitted in this manual. The equipment contains no user-serviceable parts other than field-installed circuit breakers. Contact the installer who installed the equipment for any repairs.
WARNING: Do not connect life-support systems, other medical equipment, or any other devices where product failure could lead to injury to persons, or loss of life to circuits that can be remotely switched on/off.
CAUTION: Do not use solvents to clean the equipment or expose the equipment to flammable or harsh chemicals or vapors. Do not allow petroleum-based paints, solvents, or sprays to contact nonmetallic parts of the equipment.
CAUTION: Do not use parts or accessories other than those specified for use with the equipment.

Installation and use

WARNING: Risk of electric shock. Risk of fire. Only use electrical system components approved for wet locations.
WARNING: Risk of electric shock. Risk of fire. Ensure that all wiring is correct, and that none of the wires are pinched or damaged.
WARNING: Risk of electric shock. Risk of fire. Before making any connections, verify that the circuit breaker(s) are in the 'off' position. Double-check all wiring before applying power.
WARNING: Risk of electric shock. Improper servicing of the equipment or its components may result in a risk of shock or fire. To reduce these risks, disconnect all wiring before attempting any maintenance or cleaning.
WARNING: Risk of electric shock. Always de-energize the equipment before servicing. While connectors are rated for disconnect under load, it is best practice to de-energize before disconnecting.
WARNING: Risk of electric shock. Do not use equipment in a manner not specified by the manufacturer. Doing so may cause damage to equipment, injury, or loss of life.
WARNING: Risk of electric shock. Do not modify the dead-front other than to remove filler plates as needed.
NOTE: The equipment is intended to operate with a connection to the internet. Failure to maintain an internet connection may impact performance.
NOTE: This device complies with part 15 of the FCC Rules. Operation is subject to the following two conditions: (1) This device may not cause harmful interference, and (2) this device must accept any interference received, including interference that may cause undesired operation. Changes or modifications not expressly approved by SPAN.IO could void the user's authority to operate the equipment.

Environmental Conditions

WARNING: This equipment is intended for operation in an environment having a minimum temperature of –30°C (–22°F) and a maximum temperature of 50°C (122°F).
WARNING: Install the equipment in a location that prevents damage from flooding. Ensure that no water sources are above or near the equipment, including downspouts, sprinklers, or faucets.

NOTE: This equipment has been tested and found to comply with the limits for a Class B digital device, pursuant to part 15 of the FCC Rules. These limits are designed to provide reasonable protection against harmful interference in a residential installation. This equipment generates, uses and can radiate radio frequency energy and, if not installed and used in accordance with the instructions, may cause harmful interference to radio communications. However, there is no guarantee that interference will not occur in a particular installation. If this equipment does cause harmful interference to radio or television reception, which can be determined by turning the equipment off and on, the user is encouraged to try to correct the interference by one or more of the following measures:

—Reorient or relocate the receiving antenna.
—Increase the separation between the equipment and receiver.
—Connect the equipment into an outlet on a circuit different from that to which the receiver is connected.
—Consult the dealer or an experienced radio/TV technician for help.

This equipment complies with FCC radiation exposure limits set forth for an uncontrolled environment. End users must follow the specific operating instructions for satisfying RF exposure compliance. This transmitter must be at least 20 cm from the user and must not be co-located or operating in conjunction with any other antenna or transmitter.

Contents

SPAN Panel Models

Preparing to Install

1. Unpacking & Inspecting the Panel
2. Installation requirements
3. Service equipment bonding
4. Gateway tray removal
5. SPAN Panel parts
6. Panelboard accessories

Installation

1. Choosing install location
2. Mounting the Panel
3. Installing breakers
4. Wiring the Panel
5. Communications wiring
6. Installing the Panel door
7. Finishing installation
8. Commissioning the Panel

Troubleshooting & Servicing

Appendix A

Circuit breaker compatibility

Appendix B

Surge protective device compatibility

SPAN Panel Models

SPAN Panel is an intelligent electrical panel with integrated connectivity, monitoring, and control for home loads, solar PV generation, energy storage, electric vehicle charging equipment, and the utility grid. Each SPAN Panel is wall-mounted, and similar in size, weight, and configuration to traditional electrical panels, allowing it to be installed in place of a typical 120/240 VAC or 120/208 VAC breaker panel using standard tools and materials.

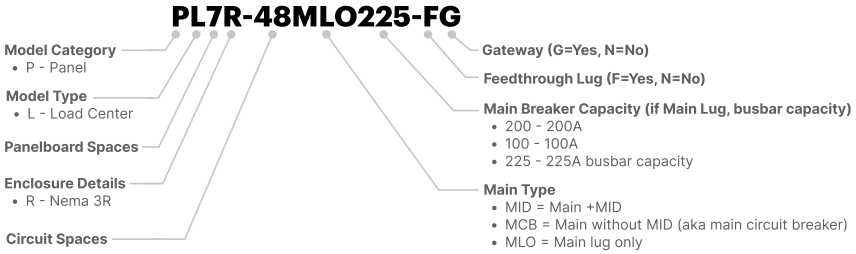

SPAN Panel installations may vary slightly between different models. This document covers installation instructions for all SPAN Panel MAIN 40 + MID and SPAN Panel MLO 48 models. The factory model number for the SPAN Panel can be found on the outer packaging box.

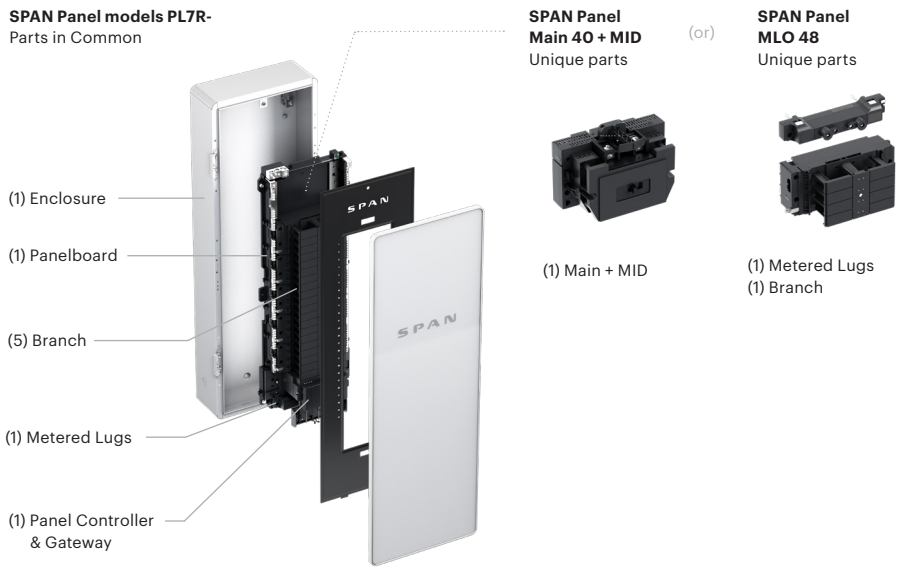

01 Unpacking & Inspecting the Panel

Inspect the packaging and SPAN Panel for damage.
Ensure you have received the following components packaged separately:

Panel Parts

- ☐ SPAN Panel Enclosure
- ☐ SPAN Panelboard
- ☐ Gateway
- ☐ Deadfront & Door

Accessories Kit

- ☐ (1) spare branch deadfront and screw
- ☐ (2) spare door latch assembly washers
- ☐ (2) spare door latch assembly screws
- ☐ (1) spare door latch handle screw
- ☐ (2) spare enclosure hinge assembly screws
- ☐ (1) T15 security torx bit
- ☐ (2) Adhesive wire clips

Additional Parts

- ☐ (1) SPAN 200 A main circuit breaker *
- ☐ (2) relocatable ground bars *
- ☐ (1) main bonding screw
- ☐ (2) service entrance barrier covers

Print Materials

- ☐ Installation Manual
  (this document)
- ☐ Getting Started card
  (with instructions for homeowner to download SPAN Home® App)
- ☐ Cardboard drill template
  for wall mount alignment, retrofit circuits denotation, and new construction dust cover

02 Installation requirements

Required Equiment

- ☐ Branch circuit breakers
  for load and generation circuits
  (see Selecting breakers)
- ☐ Main breaker (100-200A)
  of Eaton CSR type, if applicable
- ☐ Conduit and fittings suited to the installation
- ☐ Four #10 lag bolts or screws
  3 inch long (depending on attachment wall) for panel mounting, and washers (for use between fasteners and enclosure)
- ☐ Conductors rated to minimum of 75°C
  (See table below and markings on breakers for acceptable wire sizes)
- ☐ Cable for communication signaling between the SPAN Panel and external hardware
- ☐ Low Voltage Communication Cable
  for connections to external hardware such as other SPAN Panels, backup storage systems, and SPAN Drive
- ☐ Smartphone or tablet with SPAN Installer App for commissioning

Required Tools

- ☐ Torque wrench
  capable of 35 – 250 in-lbs (4 – 29 Nm)
- ☐ Allen bits
  (1/4" and 5/16")|
- ☐ #2 Robertson square driver, slotted
- ☐ Standard installation tools:
  wire cutters/strippers
  multimeter
  stud finder
  level
  tape measure
  marker
  flashlight
  knockout punch kit
  (if factory knockouts do not meet site requirements)

⚠ **CAUTION:** Install only compatible circuit breakers, conductors, and other accessories. Failure to do so may affect safety and/or product performance.

ⓘ **NOTE:** Personal protective equipment (PPE) should be worn by all persons at the installation site and properly rated for residential applications.

ⓘ **NOTE:** NEMA 3R rated conduit fittings are required for outdoor installations.

ⓘ **NOTE:** For 22kA short-circuit rating, branch breakers must be series-listed with the main breaker in the SPAN Panel. Otherwise, the Panel short-circuit rating is 10kA. See Appendix A: Circuit Breaker Compatibility for details.

02 Installation requirements

Internet Connection

SPAN Panel requires an internet connection to enable monitoring and control features, and to receive the latest software updates.

Be sure to commission the Panel using the SPAN Installer® App to establish communication with SPAN and register the Panel. Failure to do so may affect product performance and void warranty.

SPAN recommends hardwiring Ethernet between SPAN Panel and the customer's internet router in addition to using a home network Wi-Fi connection. See Communications wiring for details.

Installers are recommended to carry a basic cable tester for field-made Ethernet wiring to ensure a stable connection between SPAN Panel and the internet (or SPAN Panel and select storage systems).

Cellular LTE should only be relied on as a throttled backup internet connection.

If Wi-Fi is the primary connection, test the network connectivity strength at the proposed installation location of SPAN Panel before installing the Panel. The desired wireless signal strength is good and higher for acceptable customer experience.

On sites with weak Wi-Fi signal to the SPAN Panel, the following options are available for the Installer and customer:

- Use a dedicated hardwired Ethernet cable to connect the SPAN Panel to the home router.
- Use a Powerline Ethernet Adapter to create an Ethernet connection between the SPAN Panel and the home internet router.
- Upgrade the home Wi-Fi router to a multi-band AC router. Additional non-overlapping access point channels may also be added to improve signal quality. SPAN Panels have low data transmission requirements and will perform better connected to 2.4 GHz bands.

NOTE: Make provisions for dedicated Ethernet run(s) between the home's network access points and the SPAN Panel in new home construction during rough-in. Multiple ethernet runs may be required for external hardware such as other SPAN Panels or backup storage systems. See Communications Wiring for details.

03 Service equipment bonding

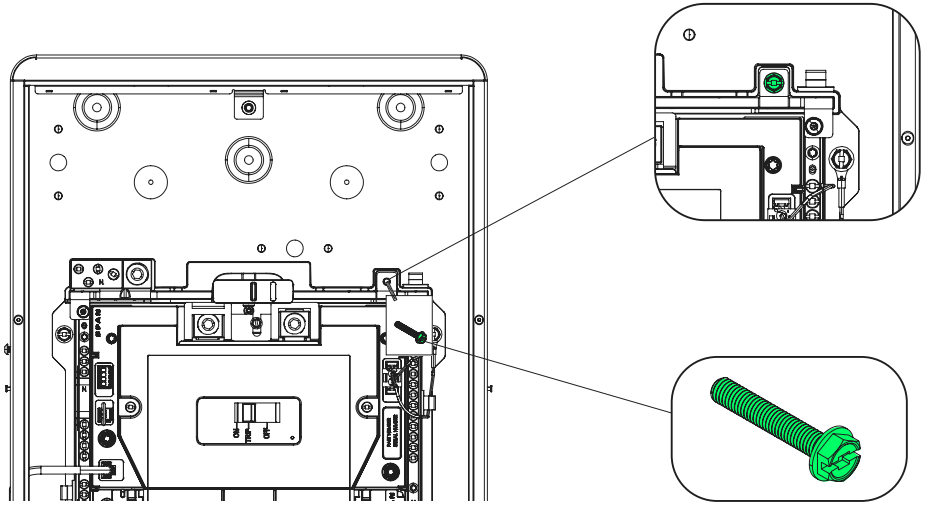

The SPAN Panel is suitable for use as service entrance equipment. When used as service equipment, primary overcurrent protection for the site is required in the form of an installed main breaker not to exceed 200A.

Verify Neutral-to-Ground bonding

- Install the green main bonding screw using a #2 square / flat head screwdriver when the SPAN Panel is used as the main service equipment, torquing to 45 in-lbs (5 N-m).
- When not used as service equipment, do not install the main bonding screw.

WARNING: When the SPAN Panel is not installed as service equipment, ensure that the green bonding screw is not fastened to the panelboard, and that Neutral and Ground are properly bonded at the upstream service equipment.

NOTE: When the SPAN Panel is installed as service equipment, ensure the Panel's main breaker is appropriately labeled as "SERVICE / MAIN DISCONNECT" using the label that is provided in the Accessory Box.

04 Gateway tray removal

The Gateway tray should be removed for the following installation procedures:

- Picking up and handlingl the panelboard
- Wiring low voltage communication signal cables
- Wiring Metered Lugs adjacent to the Panel Controller

To remove Gateway tray:

1. Slightly tilt the Gateway out of the tray to disconnect cables.
2. Set the Gateway aside in a secure and accessible location.
3. Remove the two (2) Gateway tray screws using a slotted drive, and safekeep the Gateway tray in an accessible location.

To re-install Gateway tray:

1. Insert and route all cables that connect to the Gateway through the Gateway tray.
2. Align Gateway tray over Panel Controller and fasten the two (2) slotted screws, torquing to 6.6 in-lbs (0.75 N-m).
3. Reconnect all applicable cables back to the Gateway and rock the Gateway back into place on the Gateway tray.

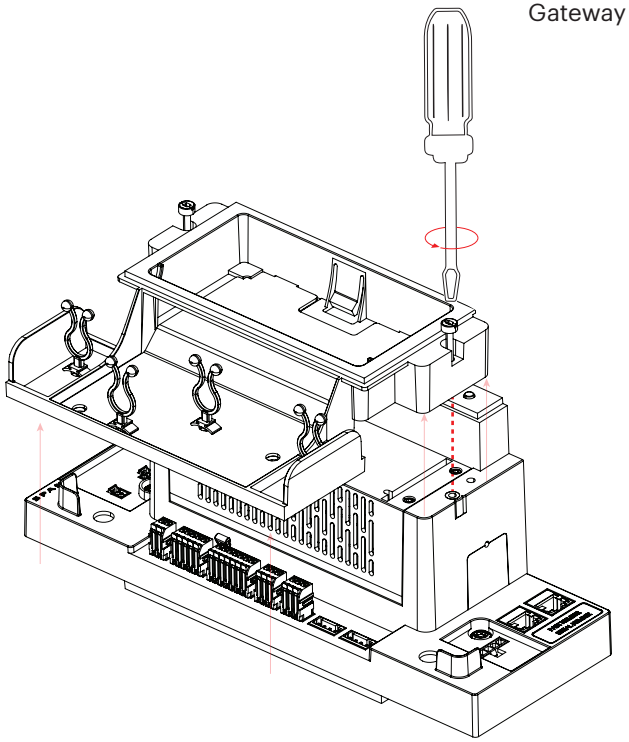

NOTE: Remove the Gateway tray before taking the panelboard out of its packaging, and set it in a secure, accessible location until all SPAN Panel wiring is complete.

05 SPAN Panel parts

SPAN Panel MAIN 40 + MID
(MN: PL7R-40MID200-FG)

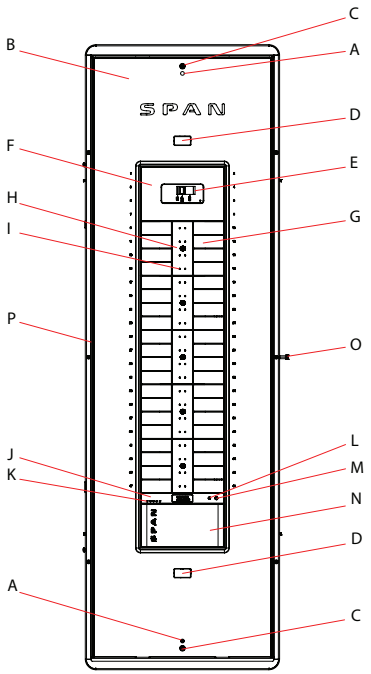

SPAN Panel MLO 48
(MN: PL7R-48MLO225-FG)

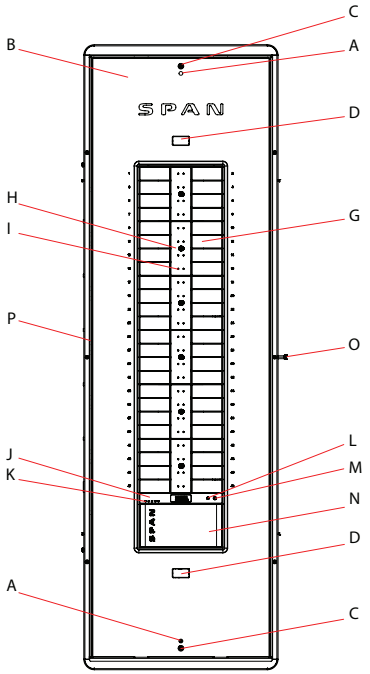

SPAN Panel MAIN 40 + MID
(MN: PL7R-40MID200-FG)

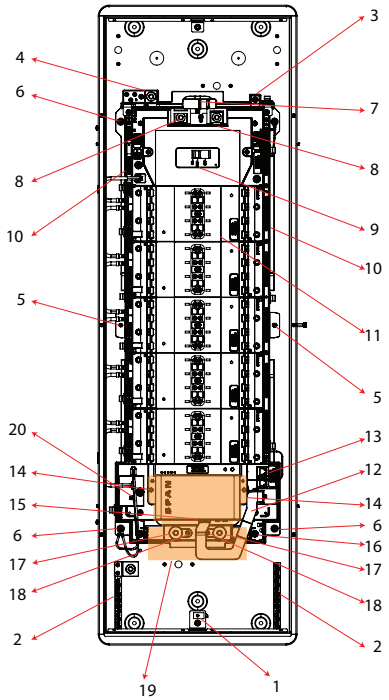

SPAN Panel MLO 48
(MN: PL7R-48MLO225-FG)

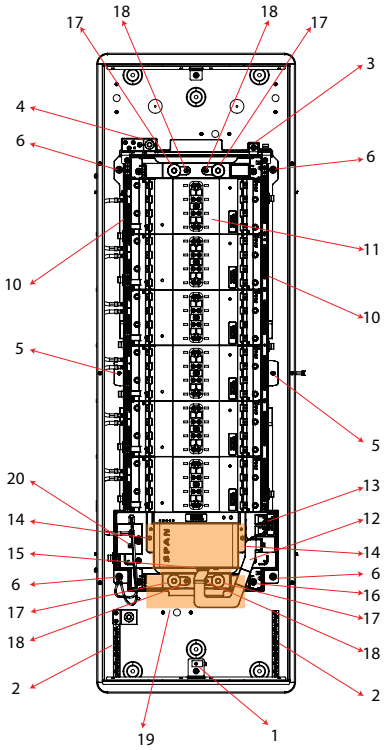

A Door sensor

B Deadfront

C Deadfront Mounting Screw

D MID Override Slot
(Break deadfront plate where manual switch is located)

E Main breaker

F Main + MID

G Branch (8 spaces)

H Branch Deadfront

I Branch LED

J Panel Controller

K Panel Status LEDs

L Reset Button

M Configuration Button

N Gateway

O Locking Hasp

P Panel Enclosure Lights

1 Door Sensor

2 Relocatable Groundblocks

3 Main bonding screw location
(See SPAN Panel as Service Equipment)

4 Neutral terminal block with feeder lug

5 Panelboard alignment pins

6 Panelboard mounting fasteners

7 MID override

8 Feeder Lugs

9 Main Breaker

10 Neutral Busbars

11 Branch Tabs

12 Gateway cable

13 SPAN LINK™ for multipanel connection

14 Gateway tray mounting locations

16 Gateway connection ports
(See Gateway diagram for details)

17 Metered Lugs

18 Surge Protection Device (SPD) attachment lugs

19 Gateway Tray

20 Enclosure sides LED power whip