02 Mounting the Panel

F

Mount the panelboard

STEP 1

Ensure the Gateway tray is removed before handling the panelboard. Avoid MID override switch above the Main +MID panelboard accessory. Use the handlebars at the top and bottom of the panelboard. See Gateway tray removal

STEP 2

- Align the panelboard to the enclosure using the pin studs on the enclosure.
- Using a hex socket/#2 square/ slotted screwdriver, fasten the panelboard at all four (4) mounting points to secure the panelboard on the enclosure.

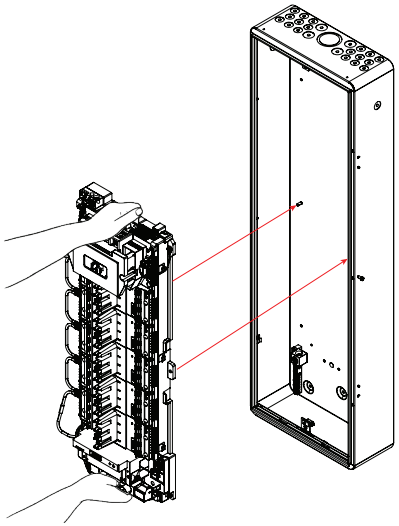

STEP 3

Secure enclosure ambient lights to Panel Controller:

- Plug the loose end of the enclosure light harness to the Panel Controller LIGHT port
- In cases where the loose end of the enclosure light harness cannot reach the Panel Controller,
  - Connect the only two disconnected ends of the enclosure light harness together. Route harness cables through wire clips where applicable.
  - Disconnect the enclosure light harness connectors on the opposite end of the enclosure and pull the longer loose end out of wire clips on the enclosure
  - Connect the long loose end of the wire harness to Panel Controller LIGHT port

NOTE: Mount the panelboard to the enclosure only after all enclosure hole punches are complete. SPAN recommends pulling feeders and home runs into the enclosure cavity before securing panelboard to enclosure.

G

Choose ground bar locations

Each SPAN Panel has two (2) ground bars (factory-installed) on the enclosure. Each ground bar may be field-installed to function at any of the designated six (6) ground bar locations.

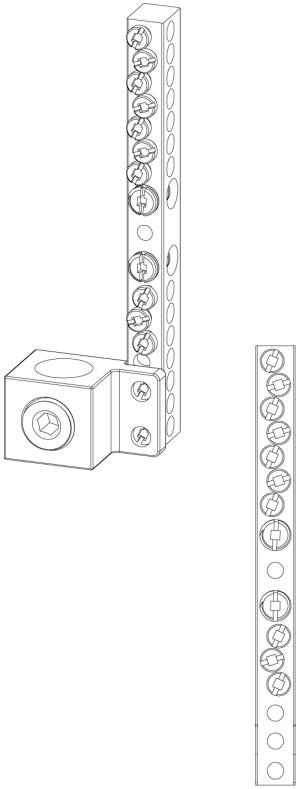

03 Installing breakers

Breaker Basics

- SPAN Panels that have a Main +MID Panelboard Accessory accept a main breaker between 100A and 200A as identified below.
- Each Branch Panelboard Accessory in the SPAN Panel supports up to 8 single pole branch circuits. Duplex 2-pole breakers may be installed on Branch Panelboard Accessories that are adjacent to one another.
- The maximum rating of each single pole branch circuit is 100A.

Breakers Listed for Use

- Use only listed breakers with the SPAN Panel.
- SPAN Main Panelboard Accessories are listed to use with both the SPAN 200A and Eaton CSR type main breakers.
- SPAN Branch Panelboard Accessories are multi-listed for use with 1" (2.54 cm) standard, tandem, AFCI, and GFCI branch circuit breakers from Siemens, Eaton, Square D, and GE/ABB types.
- See Appendix B: Circuit breaker compatibility for complete details on breaker compatibility and Short-Circuit Current Rating (SCCR).

Installing a branch breaker

1. Remove the modular deadfront by using a #2 square or slotted screwdriver. Snap off branch filler plate where there would be circuit breakers. Set the modular deadfront in a secure and accessible location.
2. Install each branch breaker by engaging the heel clips then rocking it onto the busbar stab. Ensure each breaker is firmly in place.
3. Install the modular Branch deadfront over the branch and breaker edges using a #2 square or slotted screwdriver, torquing to 4.4 lb-in (0.5 N-m). Ensure alignment across the modular deadfront and branch LEDs.

Off-the-shelf 1" breaker filler plates may be used to cover any exposed busbar stab on Branch Panelboard Accessory.

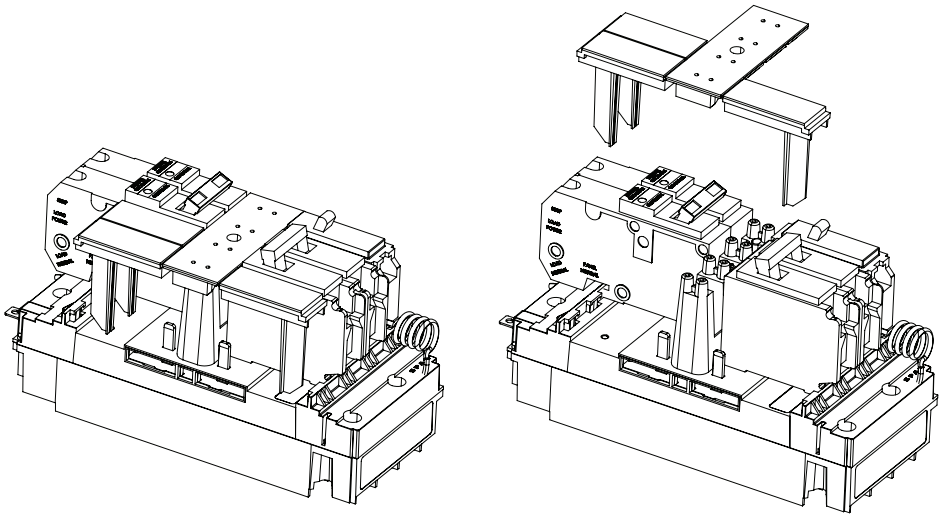

CAUTION: Do not remove or modify any factory-installed fasteners or cables unless directed as per this manual. Improper connections on factory-installed fasteners or cables may lead to Panel malfunction and damage. Such damage is not covered under the SPAN Panel Limited Warranty.

CAUTION: SPAN recommends the use of new circuit breakers in the SPAN Panel. Used circuit breakers may have wear or damage invisible to the installer that could cause failures during normal operation, such as a failure to safely interrupt a circuit under overload, or damage to the SPAN Panel. Such damage is not covered under the SPAN Panel Limited Warranty.

CAUTION: Install only listed and labeled circuit breakers compatible with the SPAN Panel. Branch circuits must not exceed the load limits specified below.

CAUTION: Use only appropriately sized, compatible circuit breakers according to the type of load. Ensure breaker selection is in accordance with NEC, CEC, and local code articles for any field modifications. Additional or replacement breakers should be of the same manufacturer, type designation, and equal or greater interrupting rating.

NOTE: SPAN Panels are not compatible with any plug-on neutral style branch circuit breakers. When AFCI/GFCI branch breakers are required, a pigtail neutral breaker style must be installed with the neutral pigtail wire connected to the Panel's neutral wiring terminal bar.

NOTE: SPAN Branch Module modular deadfront are designed to hold down branch breakers. Always remove modular deadfront before replacing a breaker. Do not forcibly pull branch breakers off the Branch Module.

NOTE: SPAN Panels are not compatible with any plug-on neutral style branch circuit breakers. When AFCI/GFCI branch breakers are required, a pigtail neutral breaker style must be installed with the neutral pigtail wire connected to the Panel's neutral wiring terminal bar.

NOTE: SPAN Branch deadfronts are designed to hold down branch breakers. Always remove modular deadfronts before replacing a breaker. Do not forcibly pull branch breakers off the Branch Panelboard Accessory.

03 Installing breakers

Installing a main breaker

The SPAN Panel must have a main breaker where there is a Main Panelboard Accessory in the panelboard. A 200A SPAN main breaker (MN: P-0MB2100-3-0) is factory-installed with every Main Panelboard Accessory. Where a different main breaker is required, the main breaker may be field-installed according to this manual.

Main breakers listed for use:

Main circuit breaker rating	Identification Numbers
100A	Eaton CSR2100
125A	Eaton CSR2125N
150A	Eaton CSR2150N
175A	Eaton CSR2175N
200A	Eaton CSR2200N
200A	SPAN P-0MB2100-3-0

To remove:

1. Remove the Main Panelboard Accessory cover by using a #2 square screwdriver to remove two (2) fastening screws
2. Remove the two (2) L1/L2 fastening nuts using a 7/16" hex socket, and safekeep the two (2) nuts and (4) washers.
3. Remove the slotted hex head fastening screw using a flat bit.
4. Pull the main breaker out of the Main Panelboard Accessory.

To install:

1. Insert the main breaker as shown to the right.
2. Install the (1) slotted hex head fastening screw, torquing to 6.6 in-lbs (0.75 N-m).
3. Install one (1) fastening nut and two (2) washers on each L1/L2 thread bolt, torquing to 53.1 in-lbs (6 N-m) each, using a 7/16-inch hex socket. See image to the right.

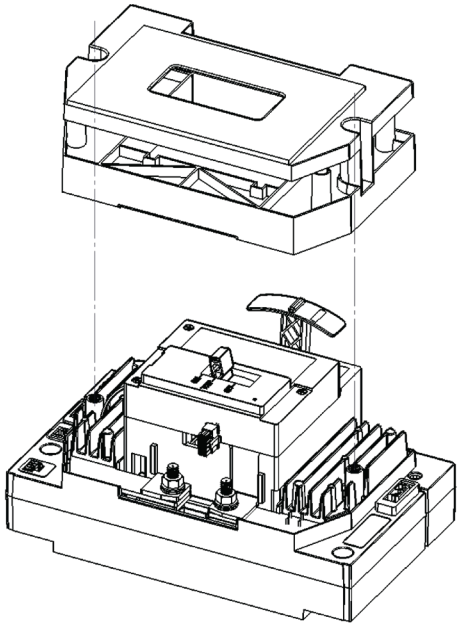

1) Main cover placement

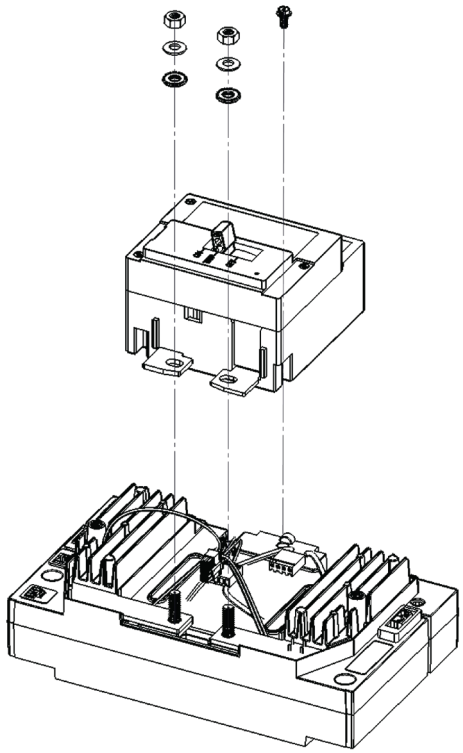

2) Main breaker placement

CAUTION: Do not remove or modify factory-installed jumper cables and fasteners unless following specific instructions in this manual. Improper connections on factory-installed fasteners or cables may lead to Panel malfunction and damage. Such damage is not covered under the SPAN Panel Limited Warranty.

CAUTION: Maximum current rating of the main breaker is 200A. Bussing is rated to 225A.

NOTE: Use a torque tool to avoid over-torquing the main breaker fasteners.

04 Wiring the Panel

Size all conductors with reference to the overcurrent protection device, ampacity, and voltage drop requirements in accordance with all local electrical codes and standards.

- Use conductors rated to a minimum of 75°C.
- Supply-side Line 1 and Line 2 conductors may connect to:
- Main breaker terminals when a Main Panelboard Accessory is in the panelboard. Supply limited to 200A max.
- Metered Lugs when there is no Main Panelboard Accessory. Supply limited to upstream overcurrent protection device rating.
- Branch breaker on the top most Branch Panelboard Accessory. Supply limited to 100A max.
- Connect supply neutral and ground conductors to their respective lugs and terminal blocks.
- Refer to the next page for suitable conductor gauges and torque requirements.
- Distribute continuous loads throughout the SPAN Panel. Do not load each Branch Panelboard Accessory more than 150A continuous.
- Connect up to a maximum of 200A for feed-through connections on SPAN Metered Lugs.
- Only direct connect compatible whole-home surge protection devices (SPD) onto Metered Lugs terminals.

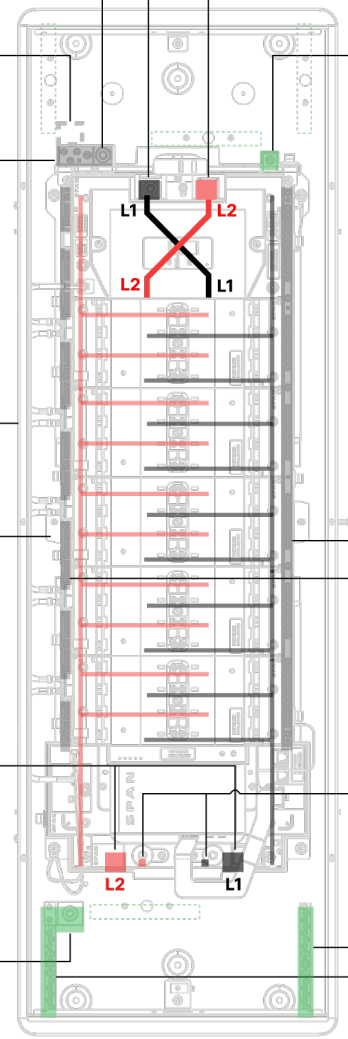

Main Neutral Lug
Tool type: 1/4-inch Hex
Torque: 250 in-lbs (29 Nm)
Wire size: #4 - 250 kcmil

Add-on Neutral Lug
(not factory shipped)
Tool type: 1/4-inch Hex
Torque: 250 in-lbs (29 Nm)
Wire size: #4 - 250 kcmil

Large Neutral Lugs
Tool type: #2 Robertson / Slotted / 5/16inch Hex Socket
Torque:
- 35 in-lbs (4 Nm)
- 40 in-lbs (4.5 Nm)
- 45 in-lbs (5 Nm)
- 50 in-lbs (5.6 Nm)

Wire size:
- #14 - 10 AWG
- #8 AWG
- #6 - 4 AWG
- #3 - 1/0 AWG

Panel Enclosure
(rotatable by 180°)[2]

Panelboard
(rotatable by 180°)[3]

Metered Lugs
(behind Gateway Tray)
Tool type: 1/4-inch Hex
Torque: 250 in-lbs (29 Nm)
Wire size: #4 - 250 kcmil

Main Ground Lug
(relocatable)
Tool type: 1/4-inch Hex
Torque: 250 in-lbs (29 Nm)
Wire size: #4 - 250 kcmil

Saddle Lug Attachment
(relocatable)
Tool type: #2 Robertson / Slotted / 5/16-inch Hex Socket
Torque: 45 in-lbs (5 Nm)

200 A Main Breaker Lugs
Tool type: 1/4-inch Hex
Torque: 250 in-lbs (29 Nm)
Wire size: #4 - 250 kcmil

Main Bonding Screw
(neutral and ground bonding)[1]
Tool type: #2 Robertson / Slotted / 5/16-inch Hex Socket
Torque: 45 in-lbs (5 Nm)

x2 Neutral Busbar
Tool type: #2 Robertson / Slotted / 5/16-inch Hex Socket
Torque:
35 in-lbs (4 Nm)
40 in-lbs (4.5 Nm)
45 in-lbs (5 Nm)
Wire size:
#14 - 10 AWG
#8 AWG
#6 - 4 AWG

SPD terminations
(behind Gateway Tray)
Tool type: #2 Robertson / Slotted / 5/16-inch Hex Socket
Torque: 250 in-lbs (29 Nm)
Wire size: #4 - 250 kcmil

x2 Ground Bars
(relocatable in 6 positions)
Tool type: #2 Robertson / Slotted / 5/16-inch Hex Socket
Torque:
35 in-lbs (4 Nm)
40 in-lbs (4.5 Nm)
45 in-lbs (5 Nm)
Wire size:
#14 - 10 AWG
#8 AWG
#6 - 4 AWG

1. Install main bonding screw only when SPAN Panel is the main service equipment
2. Enclosure knockouts must be on the bottom of SPAN Panel when installing in a wet/damp environment
3. Panelboard in SPAN Panel 48 cannot be rotated.

NOTE: Add-on neutral saddle lugs may only attach to the large neutral terminals or relocatable ground bars.

NOTE: Terminals integral to the SPAN Panel are suitable for 60/75ºC AL/CU wire. Refer to circuit breaker markings for breaker terminals' temperature rating.

04 Wiring the Panel

Wiring Metered Lugs

Ensure the Gateway tray is removed before making any feed-through connections on the Metered Lugs. See Gateway tray removal for details.

Without removing the Metered Lugs cover, insert L1 and L2 feed-through cables through the Metered Lugs dedicated for 200 A. Install L1 and L2 cables using a 1/4” Hex driver, torquing to 250 in-lbs (29 N-m).

Wiring whole-home Surge Protection Device (SPD)

The center terminals on the Metered Lugs are dedicated for whole-home SPD connections.

To directly terminate whole-home SPD connections on the Metered Lugs:

1. Insert SPD cables through the small terminals between L1 and L2 terminals.
2. Torque-down SPD cables using a #2 square or flat head screwdriver, torquing to 45 in-lbs (5 N-m).

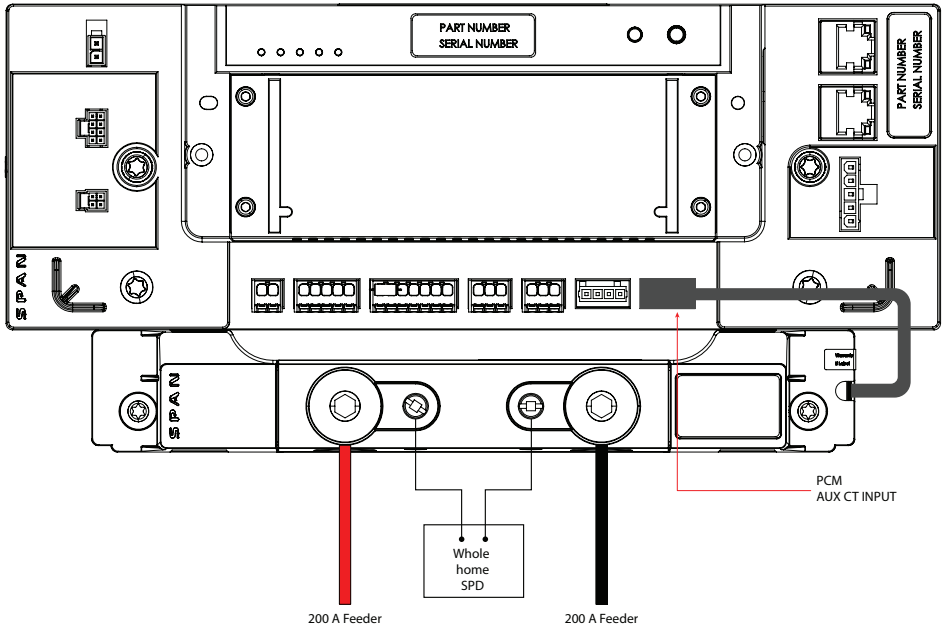

WARNING: Risk of electric shock. Check that all circuits are de-energized before making any connections, including generation equipment such as solar inverters and storage batteries.

CAUTION: The SPAN Panel is only intended for use on 120/240 VAC split-phase electrical service.

- Connect line conductors for all circuits to the respective breaker.
- Connect neutral and ground conductors to their respective wire terminals.
- Once all conductors are connected and secured, check that there are no exposed conductors or stray wires.
- Clean up conductor routing to ensure no wires will be pinched when re-assembling each modular deadfront and overall deadfront.

CAUTION: Do not remove or modify factory-installed jumper cables and fasteners unless following specific instructions in this manual. Improper connections on factory-installed fasteners or cables may lead to Panel malfunction and damage. Such damage is not covered under the SPAN Panel Limited Warranty.

NOTE: Follow markings on Panel enclosure for specific ground bar positioning and orientation at each designated ground bar location.

NOTE: Keep track of circuit labeling in retrofit installations. This information is required during commissioning.

NOTE: SPAN is also compatible with most standard SPDs connected to a 2-pole breaker or installed on a 2-space slot. The SPD circuit must be marked as an essential circuit in the SPAN Installer App under Circuit Labeling. If using an SPD with usable circuits, be sure to only have essential items on those circuits (e.g., internet router, alarms, fire detection). Homeowners will not be able to turn this circuit off via the SPAN Home App.

NOTE: SPAN is not responsible for the performance of SPDs. Follow manufacturer installation guidelines for direct terminal wiring compatibility.

05 Communications wiring

Use minimum 300V rated, twisted-pair, copper conductors only for inter-devices signal wiring. Use shielded cables for CAN and RS-485 connections. Run no more than 328 ft (100 m) of cable length for Ethernet, CAN, and RS-485 wiring.

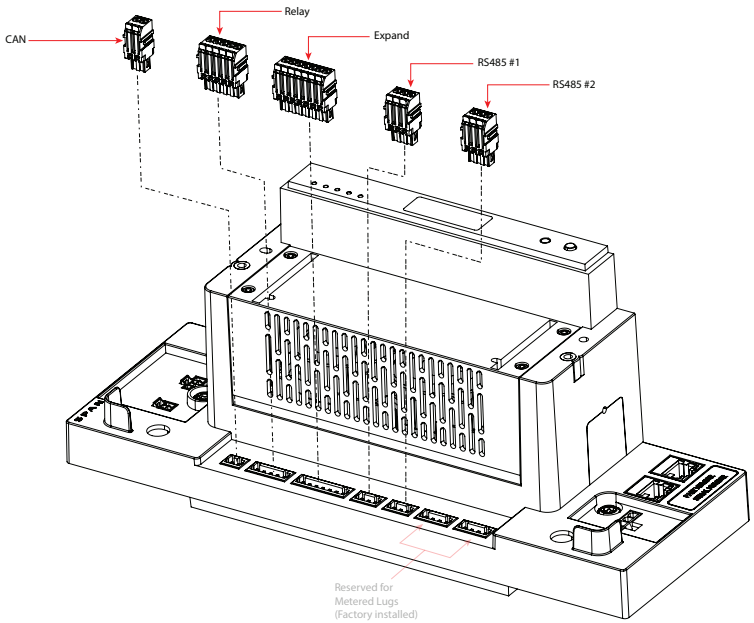

A

Wiring the Panel Controller

Every SPAN Panel has a Panel Controller that governs and enables smart features on the Panel. It is permanently fixed to the panelboard and requires its own neutral and ground connections (factory-installed). The SPAN Panel Controller powers the SPAN Panel enclosure-side LEDs and Gateway, while supporting external CAN, RS-485, auxiliary signal, and Ethernet connections.

Low voltage connections to additional hardware devices using CAN, RS-485, auxiliary signals, or external CTs are located beneath the Gateway tray. See Gateway tray removal.

Installing Low Voltage Wiring

To install low voltage wiring once the Gateway tray is removed:

1. Unplug and remove low voltage terminal connector from Panel Controller.
2. Insert stripped wire into the connector by opening the orange retention latch. Close retention latch once wire is fully seated inside connector.
3. Insert low voltage terminal connector with wire back on Panel Controller.

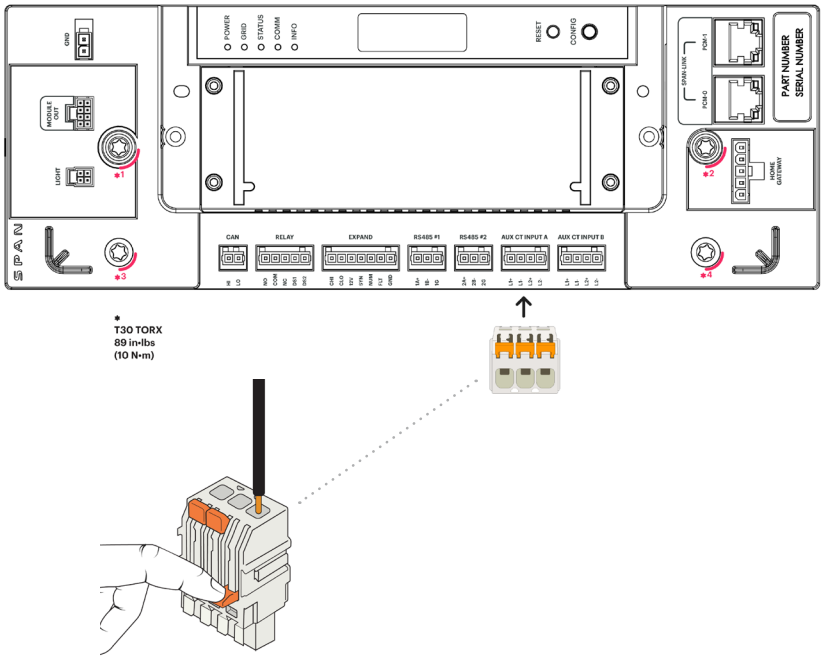

Multiple SPAN Panels Wiring

SPAN recommends hardwiring Ethernet between each SPAN Panel via the SPAN-LINK port located on each Panel's PCM.

CAUTION: Factory-installed jumper cables connecting Panel Controller to neutral, ground, and adjacent panelboard accessories must not be removed or damaged during installation. Improper connections on factory installed cables may lead to Panel malfunction and damage. Such damage is not covered under the SPAN Panel Limited Warranty.

NOTE: Homeowners will only receive one email to create a SPAN Home App account and access the SPAN Panel. Multiple SPAN Panels can be viewed under one SPAN Home App account.

05 Communications wiring

B

Wiring the Gateway

The SPAN Gateway enables SPAN Panels to connect to the internet and SPAN mobile apps. SPAN recommends hardwired Ethernet connections between the Gateway and home router for best customer experience.

STEP 1

Run Ethernet wiring to ETH-0 and ETH-1 ports through the Gateway tray for power and low voltage cables separation throughout the SPAN Panel. Use wire clips on the Gateway tray to secure low voltage cables. Maintain sufficient cable slack for the Gateway to be pulled out of the Gateway tray post Panel installation.

- ETH-1 is for integrated backup battery storage communications. See Backup System Connection Guide for details on setting up backup storage systems with SPAN..
- ETH-0 is for hardwired internet connections to the homeowner's router.

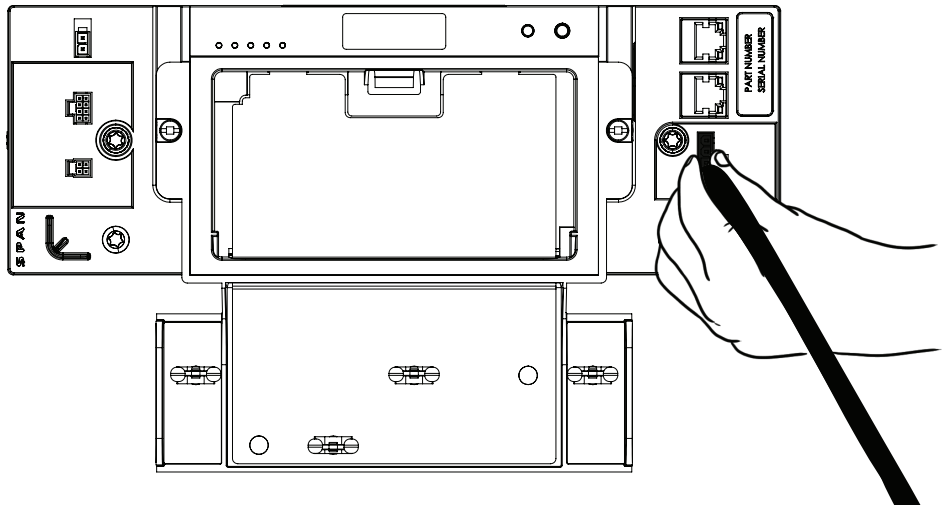

CAUTION: Do not damage or modify the Home Gateway USB jumper to the PCM. Improper connections may lead to Panel malfunction.

NOTE: External antennas are not provided by SPAN and must be separately purchased. See Recommended Accessories.

STEP 2

The SPAN Gateway connects to the Panel Controller through a custom Gateway cable. Route the Gateway cable from the Panel Controller GATEWAY port through the Gateway tray and into the PANEL CONTROLLER port. Listen for a click at each connection port when securing the cable.

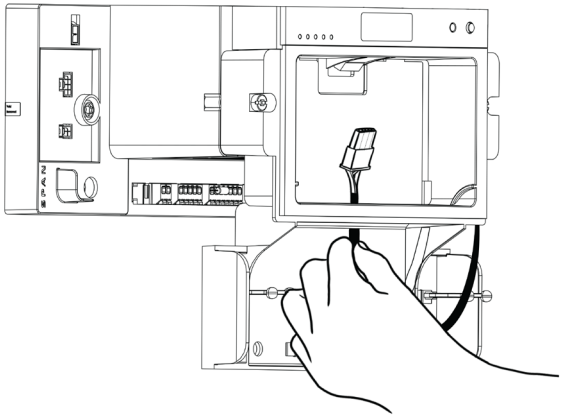

STEP 3

The SPAN Gateway is accessible with the deadfront on outside the panel dead-front to enable basic homeowner troubleshooting. To access the Gateway reset button and internet connectivity ports post installation, simply tilt and gently pull the Gateway away from the panel.

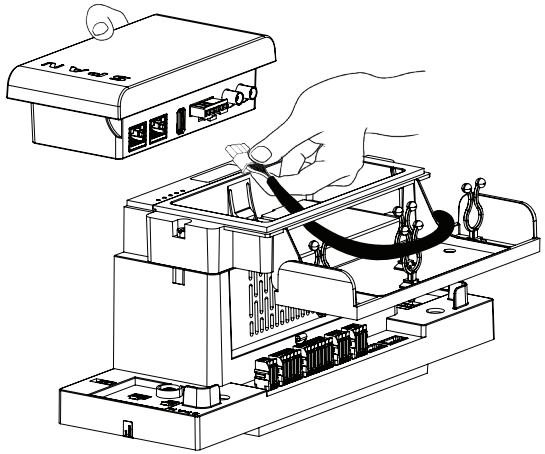

06 Installing the Panel door

The SPAN Panel is factory-shipped with the door hinges assembled on the "left" and door latch assembled on the "right." In the default orientation of the enclosure, the SPAN Panel door opens to the left side, with the door handle on the right.

A

Configuring the door swing direction

To configure the door to swing open from the "left" side:

STEP 1

Disassemble the latch pin assembly:

1. Remove the latch pin on the right side of the enclosure wall
2. Reposition and fasten the latch pin on the opposite end (left) of the enclosure
3. Tighten the screw to 2 N-m

STEP 2

Disassemble the hinge assembly:

1. Disassemble the top and bottom hinges from the door.
2. Reorient the hinges on the diagonally opposite ends on the door as shown in the figure
3. Use locating pins on the hinge assembly and fasten the screws to secure the hinges onto the door
4. Tighten the screws to 2 N-m

STEP 3

Door latch assembly:

1. Disassemble the door latch from the door
2. Disassemble the plastic handle part by removing the two (2) T15 screws, and reorient the plastic part in the opposite end of the metal plate, aligning mounting holes with notch feature
3. Fasten the screws and secure the plastic part to the handle
4. Reorient the door latch assembly on the left end of the door with the handle facing upward
5. Secure the latch assembly to the door by fastening the two screws
6. Tighten the screws to 0.5 N-m

STEP 4

Attaching the door to the enclosure:

1. Use the keyhole feature on the door hinge brackets to position the door to the enclosure
2. Secure the hinge fasteners to secure the door
3. Tighten the screws to 2 N-m

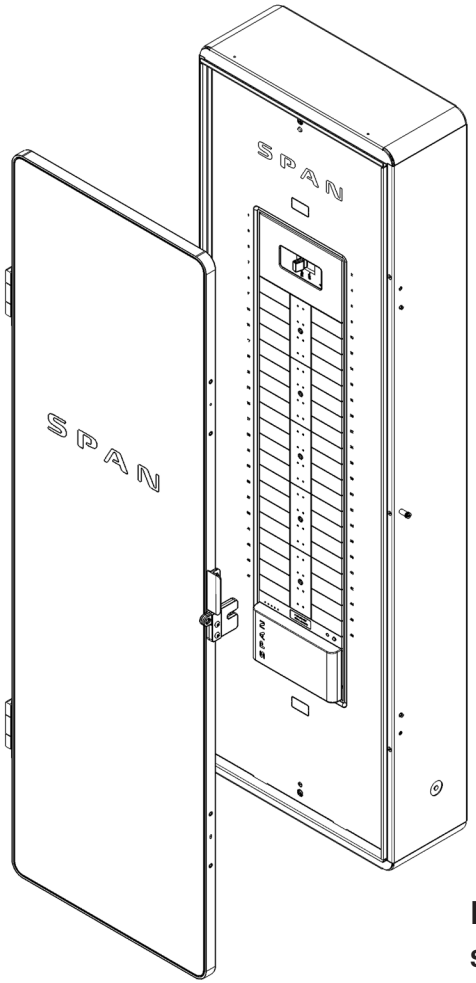

B

Secure Panel door to enclosure

1. Align the door hinge brackets to the pins on the enclosure. Make sure both top and bottom brackets align with the pins before sliding the door down into place.
2. Using a security T15 Torx driver, fasten two (2) hinge bracket screws to secure the door to enclosure, torque to 7 in-lbs (0.8 Nm).

07 Finishing Installation

A

Confirm that all connections are correct, properly grounded, and secure.

B

Ensure factory-installed jumper cables and fasteners remain secure in place once all panel wiring is complete. Ensure enclosure LEDs are connected.

C

Using a flathead screwdriver, fasten the two (2) deadfront fastener screws to the Panel enclosure.

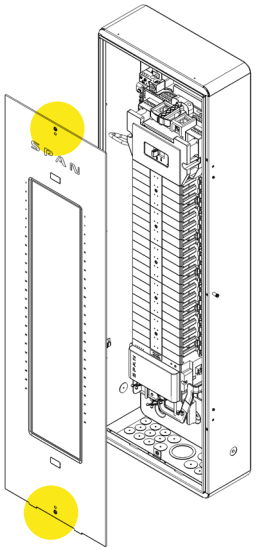

D

Only after fully replacing the deadfront assembly, restore power.

E

Lock the Panel closed with the hasp at the door latch using a lock provided by the homeowner.

WARNING: Risk of electric shock. Do not modify the overall deadfront and ensure alignment of Branch deadfronts to cover all live components in the Panel. Replace Branch circuit tabs as needed.

08 Comissioning

The SPAN Panel must be configured with the SPAN Installer App prior to customer use. The SPAN Installer App provides setup instructions, including configuring the Panel's internet connection, digitally labeling circuits, connecting other devices to the Panel, and error and troubleshooting instructions.

You must download the SPAN Installer App from www.span.io/span-apps and be a SPAN Authorized installer™ to receive a login and gain access.
To become a SPAN Authorized Installer, refer to www.span.io for instructions.

The commissioning process begins by scanning the SPAN Panel QR code found above the Gateway. Status LEDs on the Panel Controller and Branch Panelboard Accessories will flash blue when the SPAN Panel is being commissioned.

A healthy commissioned SPAN Panel Controller under normal operating conditions displays solid white LEDs on the following indicator statuses.

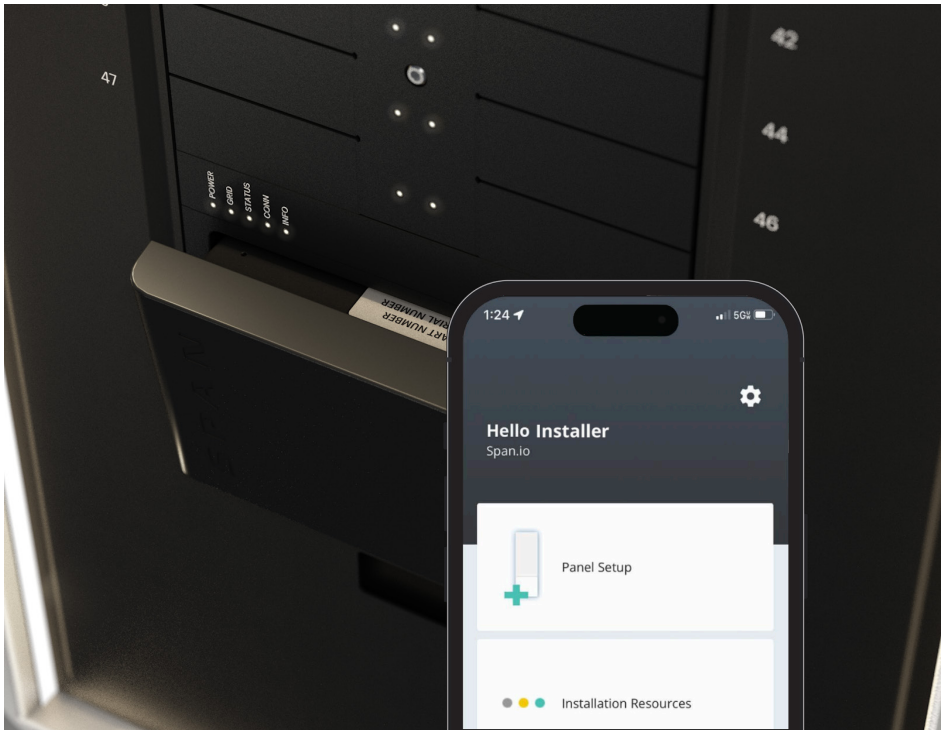

NOTE: Uncommissioned SPAN Panel branch circuits with power flow detected will display a solid red LED on the Branch Panelboard Accessory.

Troubleshooting & Servicing

Status LEDs

Interface guide

Gateway	ON - normal	Rebooting	No connection to PCM	Commissioning
	Gateway not powered	Updating	Fault (see blink codes)	
Branch Module	Circuit normal	Circuit off	Configuration error	Commissioning
	Circuit throttled	Circuit paused	Fault (see blink codes)	Empty breaker space
Panel Controller – POWER	System powered	System not powered		
Panel Controller – INFO				Button press feedback
Panel Controller – STATUS	Systems healthy	Rebooting	System Fault	Commissioning
		Updating	Fault (see blink codes)	
Panel Controller – GRID	On Grid	Backup	Fault (see blink codes)	
	Qualifying	Off Grid		
Panel Controller – COMM	Stable network connection	Looking for internet	No Connection to Gateway	

Communication with the SPAN Panel

Follow these troubleshooting steps to establish communication and verify operation of the SPAN Installer App:

1. Wait at least three (3) minutes after powering-on before attempting to connect to the Panel.
2. Ensure the SPAN Panel is connected to the internet using the SPAN Installer App.
3. Ensure external hardware systems such as battery backup, SPAN Drive®, SPAN Remote Meter™ Kit are communicating with the SPAN Panel using the SPAN Installer App, if applicable.
4. Ensure all circuits and circuit locations are correctly identified in the SPAN Installer App.
5. To restart the system, press and hold the Reset button for 10 seconds (see “Resetting the system” below).

Resetting the System

If it becomes necessary to restart the system, use a small tool to press the Reset button, located on the Panel Controller. Hold the button for 10 full seconds before releasing.

Overriding the grid disconnect relay

If it is necessary to manually reconnect your home to the grid, SPAN Support may direct you to operate the manual override in the SPAN Panel.

WARNING: Do not attempt to open, disassemble, repair, tamper with, or modify the equipment. The equipment contains no user-serviceable parts other than field-installed breakers. Contact the installer who installed the equipment for any repairs. Only qualified electrical personnel should remove the deadfront panel.

CAUTION: Do not remove the protective label or operate the manual override unless directed to do so by SPAN Support. Improper operation of the manual override may damage the unit.

Appendix A: Circuit breaker compatibility

SPAN has been evaluated per the UL Standard for panelboards for use with the branch breaker types below in Table A.1.

Informational Notes

National Electric Code (NFPA 70) does not prohibit the use of different branch circuit breakers in panelboards provided it does not violate the listing of any equipment. NEC article 110.3(B) states "Equipment that is listed, labeled, or both shall be installed and used in accordance with any instructions included in the listing or labeling."

The Standard for Molded-Case Circuit Breakers (UL 489) does not require listing circuit breakers for use in specific panels, nor does this standard cover panelboards. Such testing is covered by the UL Standard for panelboards (UL 67), which does require the panelboard to be listed with specific breaker types. SPAN is certified to the UL 67 Standard via a Nationally Recognized Testing Lab (NRTL) for use with the branch circuit breakers below. This is reflected in this installation information as well as marked on the product itself.

Compatible branch breakers are listed on following pages.

Short circuit current rating

Main breaker manufacturer	Main breaker rating (A)	Branch breaker manufacturer	Interrupt Circuit rating (kAIC)
SPAN	200	SquareD (HOM)	22
		Any other manufacturer	10
Eaton (CSR)	100 - 200	Eaton (BR)	22
		Any other manufacturer	10

Specified branch breakers

Siemens Breakers

Style	Type	Poles	Max Amp	Catalog #s
General	QP	1, 2	100	Q followed by 110 to 290; may be followed by H
Duplex (tandem)	QT	1	30	Q followed by 1010 to 3030; may be followed by NC
Triplex (tandem)	QT	1, 2	30	Q followed by 21010 to 23030; followed by CT
Quadplex (tandem)	QT	2	40	Q followed by 21515 to 24040; followed by CT2
Branch-feeder arc fault circuit interrupter	QAF2	1, 2	20	QA followed by 115 to 120; followed by AF; may be followed by H
Combination arc fault circuit interrupter (AFCI)	QAF and QAF2	1, 2	20	Q or QA followed by 110 to 220; followed by AFC; may be followed by H
Tandem combination arc-fault circuit interrupter (AFCI)	CAFCI	1	20	Q followed by 1010 to 2020; followed by AFC
Ground fault circuit interrupter (GFCI)	QPF and QPF2	1, 2	60	QF followed by 110 to 260; followed by A; may be followed by H
Ground fault equipment protection	QE	1, 2	60	QE followed by 115 to 260; may be followed by H
Dual function combination ground fault and arc-fault protection	QFGA2	1	20	Q followed by 110 to 120; followed by DF; may be followed by H

NOTE: NOTE: Branch breakers must be series-listed with the main breaker for 22 kAIC.

Appendix A: Circuit breaker compatibility

Specified branch breakers, cont.

Eaton Breakers

Style	Type	Poles	Max Amp	Catalog #s
General	BR	1, 2	100	BR or BRH followed by 110 to 290
Duplex (tandem)	BD	1	50	BD followed by 1010 to 5050
Quadplex (tandem)	BQ and BQC	1, 2	50	BQ followed by 215215 to 2502120
Combination arc fault circuit interrupter (AFCI)	BR	1, 2	20	BRN or BRC followed by 110 to 120; followed by AF or CAF
Ground fault circuit interrupter (GFCI)	GFTCB and GFEP	1, 2	50	BRN, GFTCB, BRHN, or GFTCBH followed by 110 to 250; may be followed by GF
Ground fault equipment protection	GFEP	1, 2	50	BRN or GFEP followed by 115 to 250; may be followed by EP
Dual function combination ground fault and arc-fault protection	BR	1	20	BRN or BRAFGF followed by 110 to 120; may be followed by DF

Square D Breakers

Style	Type	Poles	Max Amp	Catalog #s
General	HOM	1, 2	100	HOM followed by 110 to 290
Tandem (duplex)	HOMT	1	30	HOMT followed by 1010 to 3020
Quad (tandem)	HOMT	1, 2 2	50 50	HOMT followed by 1515215 to 2020250 HOMT followed by 215215 to 230250
Combination arc fault circuit interrupter (AFCI)	HOM-CAFI	2	50	HOM followed by 110 to 220; followed by CAFI
Ground fault circuit interrupter (GFCI)*	HOM-GFI	1, 2	20	HOM followed by 110 to 250; followed by GFI
Ground fault equipment protection	HOM-EPD	1, 2	50	HOM followed by 115 to 250; followed by EPD
Dual function combination ground fault and arc-fault protection*	HOM-DF	1	20	HOM followed by 110 to 120; followed by DF

GE Breakers

Style	Type	Poles	Max Amp	Catalog #s
General	THQL and THHQL	1, 2	100	THQL or THHQL followed by 1115 to 21100
Combination arc fault circuit interrupter (AFCI)	THQL-AF2 and THHQL-AF2	1	20	THQL or THHQL followed by 1115 to 1120; followed by AF2
Ground fault circuit interrupter (GFCI)	THQL-GFT and THHQL-GFT	1, 2	50	THQL or THHQL followed by 1115 to 2150; followed by GFT
Dual function combination ground fault and arc-fault protection	THQL-DF and THHQL-DF	1	20	THQL or THHQL followed by 1115 to 1120; followed by DF

NOTE: SPAN Panel is not compatible with plug-on neutral style branch breakers. Use only pigtail neutral breaker styles where applicable.

NOTE: SPAN Panel is not compatible with Eaton BRL type branch breakers. Ensure secure attachment of branch breakers at the panelboard busbar stab and heel to prevent any wobbling or loose connections.

Appendix B: PowerUp and PCS

The SPAN Panel with PowerUp is equipped with a power control system (PCS) to prevent the overloading of its mains conductors. The PCS functions are enabled by default whenever SPAN PowerUp™ is turned on by the SPAN Authorized Installer™ and cannot be modified or deleted by a user once set. SPAN PowerUp is enabled during installation commissioning using the SPAN Installer® App. Note that modifications, including disabling the PCS function, can only be done by a SPAN Authorized Installer after requesting a password from SPAN to unlock the PowerUp settings in the SPAN Installer App. The PCS function operates independent of other SPAN PowerUp features, such as appliance prioritization. Where the main breaker in the SPAN Panel is used on the service or feeder overcurrent protective device, the SPAN PCS is suitably rated to provide branch circuit overcurrent protection for the feeders or service conductors connected to the integral main breaker. The controlled current setting's (the PCS Setpoint's) continuous current rating shall not exceed the rating of conductor ampacity terminated to the main lugs of the SPAN Panel. The SPAN Panel PCS does not include any additional PCS operating modes (such as ESS operating modes) other than those outlined in this manual. However, the SPAN Panel PCS does not restrict the PCS operation of any other device which is connected to the SPAN Panel or service.

Compliance Info

SPAN Panel is listed both as a panelboard to UL 67 and as Energy Management Equipment to UL 916. SPAN Panel installations must meet applicable requirements in NFPA 70®, National Electrical Code® (NEC®) and the installation instructions provided by SPAN. All commissioning processes and settings, including PowerUp settings, must be performed by a SPAN Authorized Installer as described by SPAN in the installation instructions, and in the SPAN Installer App.

Proper operation of SPAN's PowerUp energy management functions are dependent upon the Panel being commissioned with the correct setpoint, including the rating of the main overcurrent protection device(s) supplying SPAN Panel. See SPAN Panel installation instructions for additional warnings and requirements.

WARNING: Configuration of SPAN PowerUp PCS settings, or changes to these settings, shall be made by qualified personnel only. Incorrect configuration or setting of the power control settings may result in unsafe conditions. All sensors used for PCS are integrated into the Panel and are not user-serviceable.

PCS Requirements

Where the SPAN Panel EMS/PCS functions have been enabled, in no cases shall the PCS setpoint exceed the rating of the overcurrent protection device, protecting the conductors connected to the main lugs of the SPAN Panel.

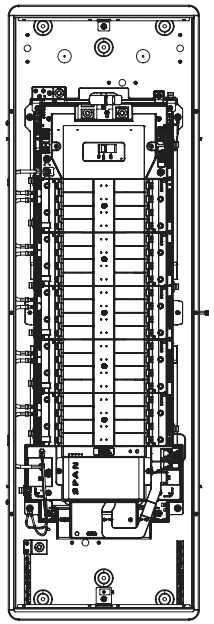

Where PCS functions are enabled for the SPAN Panel, the sum of the maximum currents from all power sources connected to the SPAN Panel's busbars shall be less than or equal to the PCS continuous current rating.

Where the SPAN Panel EMS/PCS functions have not been enabled, and the Panel supplies continuous loads or any combination of continuous and noncontinuous loads, the rating of the overcurrent device supplying the panel shall not be less than the noncontinuous load plus 125 percent of the continuous load.

PCS Setpoint (A) (Circuit Breaker Rating)	**Continuous Current Rating (A)**	**Max Power Source Current (A)**
100	80	80
125	100	100
150	120	120
175	140	140
200	180	160

CAUTION: All PCS controlled busbars or conductors shall be protected with suitably rated overcurrent devices appropriately sized for the busbar rating or conductor ampacity.

NOTE: Where the SPAN Panel EMS/PCS functions have been enabled, the maximum operating currents in controlled busbars or conductors are limited by the settings of the power control system (PCS) and may be lower than the sum of the currents of the connected controlled loads or power sources. The settings of the PCS controlled currents may be used for calculation of the design currents used in the relevant sections of NEC Articles 690, 705, and 220.

Revision Table

Nov 20, 2024 | First Print

span.io/techportal
This document does not always reflect the latest version.
Refer to Tech Portal for most up-to-date installation Manual.