SIMAGIC

KEEP RACING

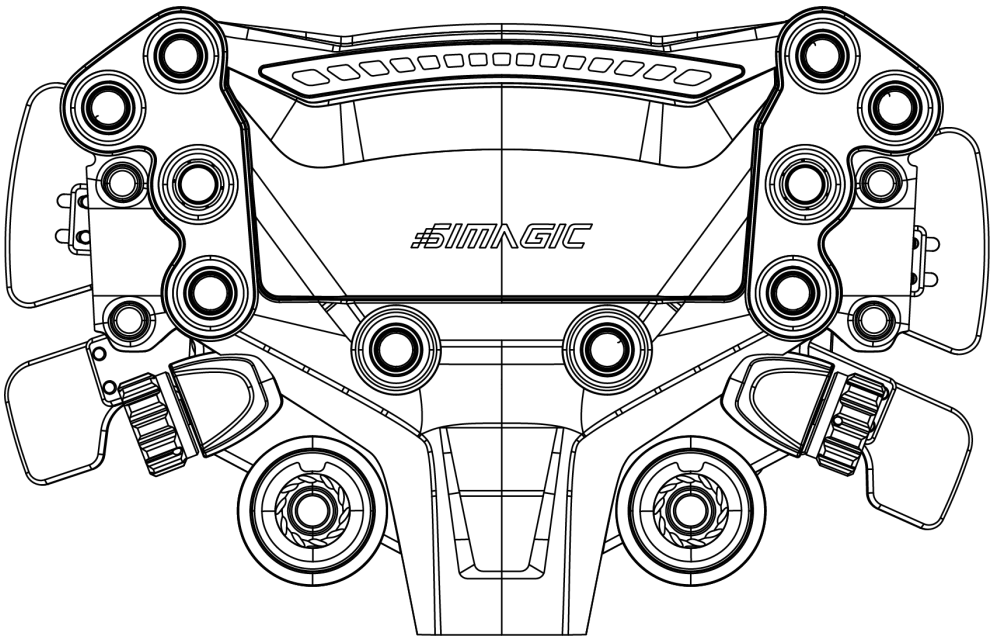

ZS

USER MANUAL

Contents

1. About SIMAGIC 03
2. Introduction 04
   - 2.1 Overview 04
   - 2.2 Specifications 05
   - 2.3 Package Contents 06
3. Instruction of Use 07
   - 3.1 Quick Guide 11
   - 3.2 Software_Simpro Mananger 12
4. Warranty Description 13
5. Safety 15
6. Contact us 16

Thank you for choosing

SIMAGIC

Before using your new ZS, please review this manual for essential information about your health and safe usage of the product.

KEEP RACING!

2. ZS Introduction

2.1 Overview

ZS

- **Swappable Rims:** Grips for any drive (foam, alcantara, microfiber)
- **RPM Indicator:** 15-LED, custom-built.
- **Soft Light Buttons:** 8 customizable, RGB, in-house LED tech.
- **Encoders:** Dual absolute, 12-segment, with RGB rings.
- **SimHub Support:** Button/RGB control via software.
- **Construction:** Die-cast aluminum back, lightweight ABS front, carbon fiber.
- **Knobs/Caps:** Precision-machined aluminum.

2.2 Specifications

Product Name	ZS
Wheel Type	Formula Steering Wheel/GT
Materials	Plastic Front Shell + Die-Cast Aluminum Rear Cover
Programmable RGB Buttons	8
7-way Multi- position Rotary Switch	2
12-Set Programmable LED Encoders	2
Thumb Rotary Encoders	2
Wireless Technology	2.4G Wireless function
UP+ Double Shifter modules	Included
Button Cap Stickers	Included
Dimensions (Length x Width x Height)	248.2x100.5 x142mm
Net Weight	1046g
Quick Release	SIMAGIC QR50 Included
Accessories	Magnetic screen connector, Installation Kit Connecting line, Button Cap Stickers
Optional Accessories	Maglink, UP+ Shifter modules, Wheel Rim, Display, QR70 Quick Release

** Specifications subject to change without notice*

2.3 Package Contents

- Pan Head Screw M5-10 x 8
- USB Type-C x 1
- Magnetic Screen Connector x 1
- Cap Stickers x 1
- Allen Key x 1 (3mm)

Optional Accessories

- maglink™
- Wheel Rim
- UP+ Shifter modules
- Display
- QR70 Quick Release

The accessorie above are optional and not included in the package

3. Instruction for Use

Thank you for purchasing the SIMAGIC ZS Hub!

Before setting up the hub,carefully read all the documentation that came with the package.

- For information about firmware upgrades, please check www.simagic.com/download. * The related files are game adaptation files developed by SIMAGIC for SIMAGIC-compatible devices. To safeguard users' legal rights and interests, please download all files through SIMAGIC's designated channels.
- Please visit **Simagic official** YouTube channel (https://www.youtube.com/@simagicofficial6890) for tutorial videos showcasing different setup options and usage techniques.
- Please visit www.simagic.com/telemetry-support to access the list of games supported by this product. Note that using this product in non-supported games may result in certain functions not working as intended.

The Hub is intended for indoor use only

15+ **Recommended ages 15 and above**

3.1 Quick Guide

Steering Wheel Function Shortcuts

Clutch Calibration Mode

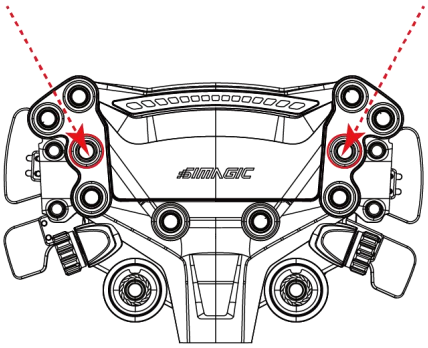

Push the seven-way funky switch upwards for 5 seconds to enter clutch calibration mode. Press the clutch paddles all the way down once to complete the clutch calibration.
Note: The paddle module with clutch paddles must be installed.)

Factory Reset

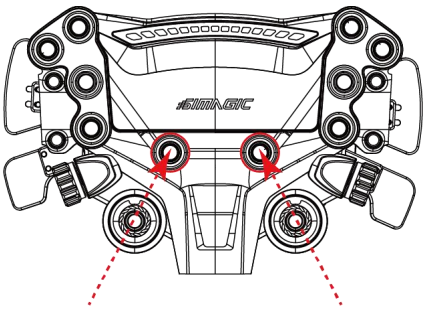

Press and hold the two indicated buttons simultaneously for 5 seconds to reset the wheel back to factory default settings.

Steering Wheel Adjustment

Install the Paddle Module

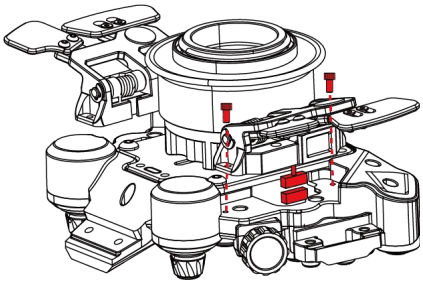

Remove the two screws and disconnect the terminal to replace the paddle shifter set.

Installing Handle Grips

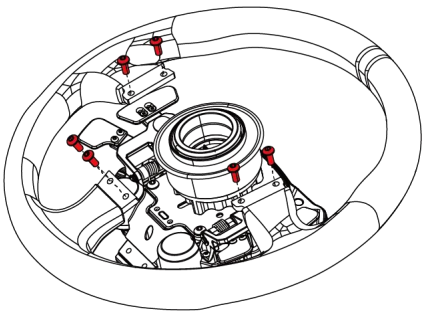

Position the handle grip on the corresponding area of the steering wheel, Secure with six M5-10 Pan Head Screw to complete the installation.

Steering Wheel Adjustment

Installing the Screen

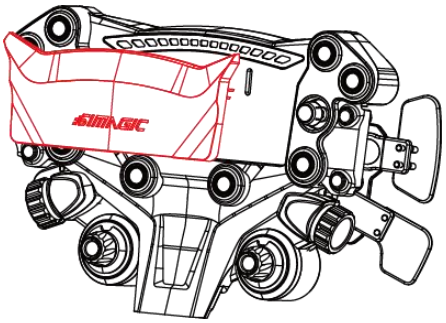

① Remove the decorative cover.

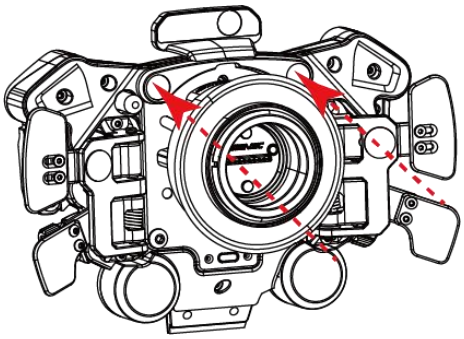

② Install the magnetic connector for the screen, aligning it with the screw holes on the quick-release adapter plate.

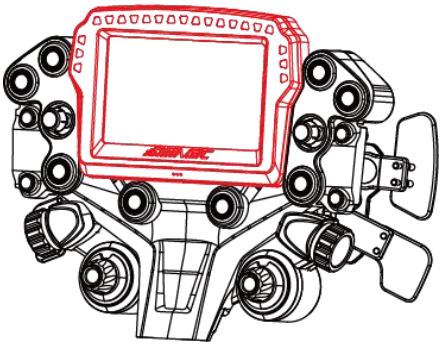

③ Install the screen.

When the Zeus series steering wheel is connected to the Alpha Mini, Alpha, or Alpha U base, it can be used wirelessly via the quick-release base connection if no magnetic screen is attached. If you wish to attach a magnetic screen, an additional Maglink device is required to ensure proper screen functionality.

Steering Wheel and Wheelbase Connection

The quick release assembly contains 6 steel balls on the top half, and 4 steel balls on the bottom half.

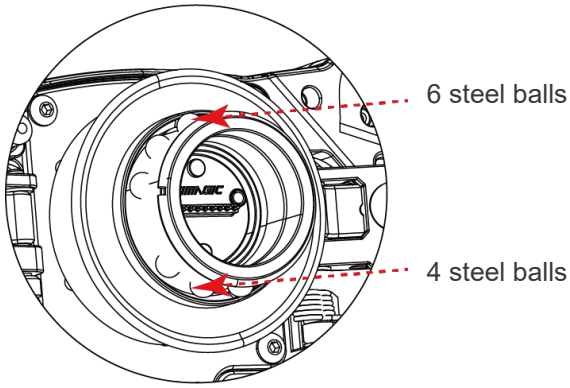

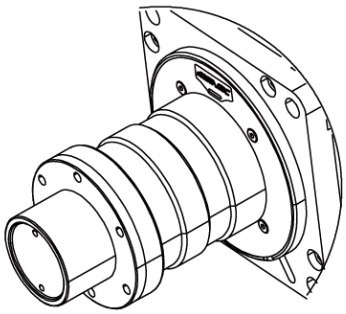

Line up with the wheelbase.

To pair the wheel to the wheelbase, attach the wheel and press the indicated buttons below to sync the frequency.

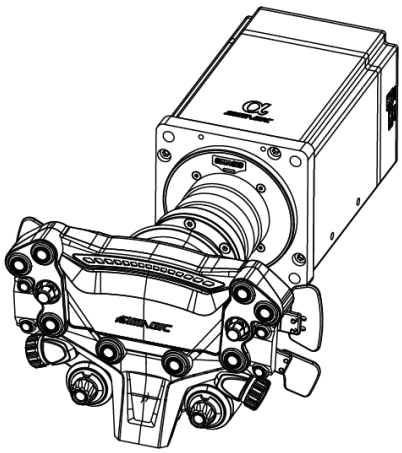

Press both buttons imultaneously for 5 seconds to activate Auto Pairing Mode.

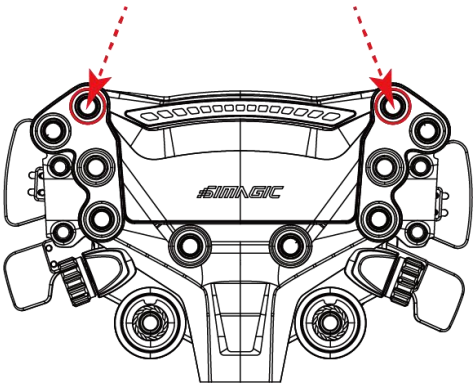

Steering Wheel and PC Connection

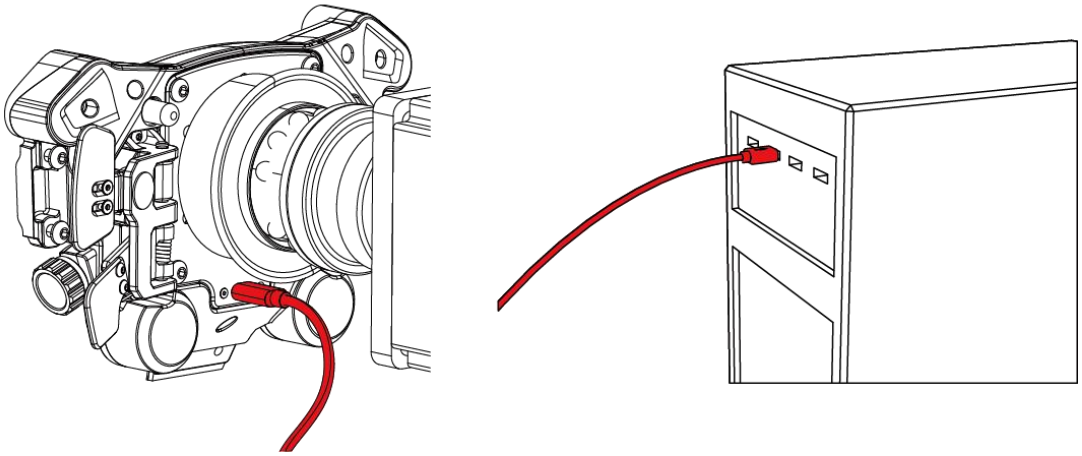

If there's no response when using the auto pairing mode, attach the included USB Type-C cable from the socket at the back of the wheel to the socket on the PC to manually sync the frequency
(Please unplug the cable before driving in wireless mode)

4. Software

Simpro Manager will automatically notify you if there are available updates for the software. If you want to double-check, please go to www.simagic.com/download and download the newest version.
Simpro Manager has a built-in feature that allows you to update the firmware on your devices automatically.

Scan QR Code

5. Warranty Description

Warranty Terms

The warranty period is**12 months** from the date of purchase. During the warranty period, if there are issues with the machine's components, materials, or craftsmanship under normal use and maintenance, and the problem is confirmed after inspection, the company will provide free repairs and replacement parts.

SIMAGIC product's Serial Number (S/N) will serve as the primary identifier for after-sales support. You can locate the S/N on the product packaging and the product itself, attached via a sticker on the product surface. Simply provide the 10 or 14-digit S/N to our customer service team or SIMAGIC distributor when applying for after-sales service, and they will assist you promptly.

For users who have products with serial numbers, there's no need for warranty cards. However, if your product does not have a serial number, you will need to retain your warranty card for after-sales support.

Your product's serial number can be found on the label sticker of wrapping

* *Consumer Law. This Limited Warranty gives you specific legal rights, and you may have other rights that vary by your country, province or state, as applicable. Other than as permitted by law, Simagic does not exclude, limit or suspend other rights you may have. For a full understanding of your rights, you should consult the laws of your country, province or state, as applicable.*

5. Warranty Description

Warranty Terms

SIMAGIC establishes dealer terms and consumer product warranty terms, requiring official partners such as dealers and agents to provide consumers with standardized SIMAGIC warranty services to safeguard consumers' legal rights.
For information on authorized dealers, please visit www.simagic.com/experience. SIMAGIC adheres to a service spirit that is responsible for users and ensures user confidence, striving to create the ultimate user experience. Regarding these warranty terms, if adjustments are necessary, we regret that specific notifications may not be provided.

Please refer to the latest content released through official channels such as the official website. Please avoid causing damage to the machine intentionally. Do not deviate from the guidance of official or officially authorized personnel when performing non-normal hardware or system operations on the machine. For detailed usage instructions, please visit www.simagic.com/pro-tutorial .

Disclaimer

The Limited Warranty does not apply to any:

a) Damage to the machine caused by incorrect installation or operation.

b) Repairs, modifications, alterations, or self-replacement of any internal components by non-technical personnel of the company.

c) Alteration of the machine serial number or inconsistencies with this certificate.

d) Damage caused by negligence, water, or infiltration of other substances into the machine. Malfunctions or damage caused by accidents or natural disasters.

e) Users are prohibited from personally opening the machine's casing, as doing so may void the warranty and other guarantees.

6. Safety Information

In order to achieve maximum safty while using your ZS , We suggest that you adopt the following guidelines:

- Should you have trouble using the product properly and troubleshootingdoes not work, unplug the power and go to your local distributor for support. Do not attempt to service or fix the product yourself at any time.
- To prevent fire or shock hazard, never expose the wheel to rain or moisture.
- Only use the power and/or accessories included in the package, and/or purchase accessories made and/or approved by the manufacturer.
- Only use AC power provided by a standard wall outlet to avoid damage to the product.
- When terminating use, please turn off the buttons and power equipment to prevent accidents.
- Unplug the unit during a lightning storm or if it will not be used for a long period of time.
- Do not take apart the phone (doing so will void your warranty), component replacements must be carried out or authorized by SIMAGIC's official repair center.
- Children under 6 years old are prohibited from using this device.

When using the simulator, please pay attention to the following:

- The device has significant force feedback and contains small components. Children under 15 years old are prohibited from operating or using it independently. When in use, parents must adjust the force feedback parameters in child mode and supervise.
- For first-time users, adjust the force feedback gradually to an appropriate level.
- First-time users or those experiencing the device should be guided by the device owner.
- Loose clothing items such as hair, cables, skirts, etc., should be kept away from the simulator.

- If you have a history of epilepsy or seizures, consult a doctor before use. Certain patterns may trigger seizures with no prior history. If you experience any symptoms, please stop using the product immediately and consult a doctor.
- When using a high-torque base, the peak force feedback may cause hand injuries. If the feedback is too strong, release your hands immediately and adjust the feedback intensity parameters promptly to prevent potential accidents.
- The equipment contains moving parts, pinch points, and sharp edges that may cause personal injury. Operate with caution to prevent pinching, bruising, kicking, smashing, or other bodily injuries.
- It is recommended to limit the force feedback gaming time from 20 to 40 mins to avoid health risks from excessive use.
- Users should refrain from driving a real car for at least 1 hour after finishing the game.
- If any abnormalities are detected, stop using the device immediately and seek assistance from SIMAGIC's official or authorized service center.
- Please follow SIMAGIC's official website and public platforms for the latest product information.

6. Contact us

Discord

Facebook

Instagram

FCC Statement

This device complies with part 15 of the FCC rules. Operation is subject to the following two conditions: (1) this device may not cause harmful interference, and (2) this device must accept any interference received, including interference that may cause undesired operation.

Changes or modifications not expressly approved by the party responsible for compliance could void the user's authority to operate the equipment.

NOTE: This equipment has been tested and found to comply with the limits for a Class B digital device, pursuant to part 15 of the FCC Rules. These limits are designed to provide reasonable protection against harmful interference in a residential installation. This equipment generates uses and can radiate radio frequency energy and, if not installed and used in accordance with the instructions, may cause harmful interference to radio communications. However, there is no guarantee that interference will not occur in a particular installation. If this equipment does cause harmful interference to radio or television reception, which can be determined by turning the equipment off and on, the user is encouraged to try to correct the interference by one or more of the following measures:

•Reorient or relocate the receiving antenna.

•Increase the separation between the equipment and receiver.

•Connect the equipment into an outlet on a circuit different from that to which the receiver is connected.

•Consult the dealer or an experienced radio/TV technician for help.

The device has been evaluated to meet general RF exposure requirement. The device can be used in portable exposure condition without restriction.

Copyright © 2024 SIMAGIC Tech Co.Ltd. All Rights Reserved.

The products and corporate names mentioned in this manual may or may not be registered trademarks or copyrights of their respective companies. They are used solely for the purposes of identification or explanation, and to the benefit of the owners, without any intention of infringement.

The specifications and information provided in this manual are intended for informational purposes only and are subject to change at any time without notice. They should not be interpreted as a commitment by SIMAGIC. SIMAGIC assumes no responsibility or liability for any errors or inaccuracies that may appear in this manual, including those related to the products and software described within it.

SIMAGIC shall not be liable for any lost profits, loss of information or data, special, incidental, indirect, punitive, or consequential damages arising in any way out of the distribution, sale, resale, use, or inability to use the Product. In no event shall Simagic's liability exceed the retail purchase price of the Product.