FCC SAR Test Report

Client Name	:	**Grastron Technology CO., LTD**
Address	:	**401 Building#B Dingxin Science and Technology Park,Honglangbei #2 Road,Xin'an street,Baoan district, Shenzhen, Guangdong Province 518101 China**
Product Name	:	**Wireless Presentation System**
Date	:	**Jul. 14, 2023**

Shenzhen Anbotek Compliance Laboratory Limited

Contents

1. Statement of Compliance 6
2. General Information 7
2.1 Client Information 7
2.2 Description of Equipment Under Test (EUT) 7
2.3 Device Category and SAR Limits 9
2.4 Applied Standard 9
2.5 Environment of Test Site 9
2.6 Test Configuration 9
2.7 Description of Test Facility 10
3. Specific Absorption Rate (SAR) 11
3.1 Introduction 11
3.2 SAR Definition 11
4. SAR Measurement System 12
4.1 E-Field Probe 13
4.2 Data Acquisition Electronics (DAE) 13
4.3 Robot 14
4.4 Measurement Server 15
4.5 Phantom 15
4.6 Device Holder 17
4.7 Data Storage and Evaluation 18
5. Test Equipment List 20
6. Tissue Simulating Liquids 21
7. System Verification Procedures 22
8. EUT Testing Position 24
8.1 Body Worn Position 24
8.1. USB connector orientations on laptop computers 24
9. Measurement Procedures 25
9.1 Spatial Peak SAR Evaluation 25
9.2 Power Reference Measurement 26
9.3 Area Scan Procedures 26
9.4 Zoom Scan Procedures 27
9.5 Volume Scan Procedures 28
9.6 Power Drift Monitoring 28
10. Conducted Power 29
11. Antenna Location 35
12. SAR Test Results Summary 36
13. Simultaneous Transmission Analysis 39
Simultaneous TX SAR Considerations 39

Evaluation of Simultaneous SAR 39
14. Measurement Uncertainty 41
Appendix A. EUT Photos and Test Setup Photos 43
Appendix B. Plots of SAR System Check 44
Appendix C. Plots of SAR Test Data 47
Appendix D. DASY System Calibration Certificate 53

TEST REPORT

Applicant	:	Grastron Technology CO., LTD
Manufacturer	:	Grastron Technology CO., LTD
Product Name	:	Wireless Presentation System
Model No.	:	WMT-C16C, DG-C16, DG-C19, WMT-C10C, WMT-C11C, WMT-C12C, WMT-C13C, WMT-C14C, WMT-C15C, WMT-C17C, WMT-C18C, WMT-C19C
Trade Mark	:	N/A
Rating(s)	:	Input: 5V 0.9A
Test Standard(s)	:	**IEC/IEEE 62209-1528:2020; FCC 47 CFR Part 2.1093; ANSI/IEEE C95.1:2005; Reference FCC KDB 447498; KDB 248227; KDB 616217**

The device described above is tested by Shenzhen Anbotek Compliance Laboratory Limited to determine the maximum emission levels emanating from the device and the severe levels of the device can endure and its performance criterion. The measurement results are contained in this test report and Shenzhen Anbotek Compliance Laboratory Limited is assumed full of responsibility for the accuracy and completeness of these measurements. Also, this report shows that the EUT (Equipment Under Test) is technically compliant with the IEC/IEEE 62209-1528:2020, FCC 47 CFR Part 2.1093, ANSI/IEEE C95.1:2005 and Reference KDB 447498, KDB 248227, KDB 616217 requirements.

This report applies to above tested sample only and shall not be reproduced in part without written approval of Shenzhen Anbotek Compliance Laboratory Limited.

Date of Receipt	Jun.30, 2023
Date of Test	Jul.03 - 05, 2023
Prepared By	(Ella Liang)
Approved & Authorized Signer	(Kingkong Jin)

Version

Version No.	Date	Description
R00	Jul. 14, 2023	Original

Address:1/F.,Building D,Sogood Science and Technology Park, Sanwei Community, Hangcheng Street, Bao'an District, Shenzhen, Guangdong, China.
Tel:(86) 0755-26066440 Fax:(86) 0755-26014772 Email:service@anbotek.com
Hotline 400-003-0500
www.anbotek.com.cn

1. Statement of Compliance

The maximum results of Specific Absorption Rate (SAR) found during testing are as follows.

<Highest SAR Summary>

Frequency Band	Highest Reported 1g-SAR(W/Kg)	SAR Test Limit (W/Kg)
	Body-worn(5mm)	
WIFI 2.4G ANT 1	0.585	**1.6**
WIFI 2.4G ANT 2	0.572	
WIFI 5.2G ANT 1	0.700	
WIFI 5.2G ANT 2	0.719	
WIFI 5.8G ANT 1	**0.731**	
WIFI 5.8G ANT 2	0.668	
Simultaneous	**1.201**	
Test Result	**PASS**	

This device is in compliance with Specific Absorption Rate (SAR) for general population/uncontrolled exposure limits (1.6 W/kg) specified in KDB 447498 D01 v06, 2015 and ANSI/IEEE C95.1:2005, and had been tested in accordance with the measurement methods and procedures specified in IEEE 1528-2013.

2. General Information

2.1 Client Information

Applicant	:	Grastron Technology CO., LTD
Address	:	401 Building#B Dingxin Science and Technology Park,Honglangbei #2 Road,Xin'an street,Baoan district, Shenzhen, Guangdong Province 518101 China
Manufacturer	:	Grastron Technology CO., LTD
Address	:	401 Building#B Dingxin Science and Technology Park,Honglangbei #2 Road,Xin'an street,Baoan district, Shenzhen, Guangdong Province 518101 China
Factory	:	Grastron Technology CO., LTD
Address	:	401 Building#B Dingxin Science and Technology Park,Honglangbei #2 Road,Xin'an street,Baoan district, Shenzhen, Guangdong Province 518101 China

2.2 Description of Equipment Under Test (EUT)

Product Name	:	Wireless Presentation System	
Model No.	:	WMT-C16C, DG-C16, DG-C19, WMT-C10C, WMT-C11C, WMT-C12C, WMT-C13C, WMT-C14C, WMT-C15C, WMT-C17C, WMT-C18C, WMT-C19C (Note: All samples are the same except the model number, software function and appearance color, so we prepare "WMT-C16C," for test only.)	
Trade Mark	:	N/A	
Test Power Supply	:	DC 5V via PC	
Test Sample No.	:	1-2-2(Engineering Sample)	
Product Description	:	Operation Frequency:	WiFi 2.4G: 2412~2462MHz for 802.11b/g/n(HT20) 2422~2452MHz for 802.11n(HT40) WiFi 5.2G: 5180~5240MHz WiFi 5.8G: 5745~5825MHz
		Number of Channel:	WiFi 2.4G: 11 Channels for 802.11b/g/n(HT20) 7 channels for 802.11n(HT40) WiFi 5.2G: 4 Channels for 802.11a/n(HT20)/ac(HT20) 2 Channels for 802.11n(HT40)/ac(HT40)

			1 Channel for 802.11ac(HT80) WiFi 5.8G: 5 Channels for 802.11a/n(HT20)/ac(HT20) 2 Channels for 802.11n(HT40)/ac(HT40) 1 Channel for 802.11ac(HT80)
		Modulation Type:	WiFi 2.4G: CCK, DQPSK, DBPSK for DSSS; 64QAM, 16QAM, QPSK, BPSK for OFDM WiFi 5G: OFDM with BPSK, QPSK, 16QAM, 64QAM, 256QAM
Remark: 1) For a more detailed features description, please refer to the manufacturer's specifications or the User's Manual.			

2.3 Device Category and SAR Limits

This device belongs to portable device category because its radiating structure is allowed to be used within 20 centimeters of the body of the user. Limit for General Population/Uncontrolled exposure should be applied for this device, it is 1.6 W/kg as averaged over any 1 gram of tissue.

2.4 Applied Standard

The Specific Absorption Rate (SAR) testing specification, method, and procedure for this device is in accordance with the following standards:

- IEC/IEEE 62209-1528:2020
- ANSI/IEEE C95.1:2005
- FCC 47 CFR Part 2.1093
- Reference FCC KDB 447498; KDB 248227; KDB 616217

2.5 Environment of Test Site

Items	Required	Actual
Temperature (℃)	18-25	22~23
Humidity (%RH)	30-70	55~65

2.6 Test Configuration

For WIFI and Bluetooth SAR testing, engineering testing software installed on the EUT can provide continuous transmitting RF signal.

2.7 Description of Test Facility

The test facility is recognized, certified, or accredited by the following organizations:

FCC-Registration No.: 184111

Shenzhen Anbotek Compliance Laboratory Limited, EMC Laboratory has been registered and fully described in a report filed with the (FCC) Federal Communications Commission. The acceptance letter from the FCC is maintained in our files. Registration No. 184111.

ISED-Registration No.: 8058A

Shenzhen Anbotek Compliance Laboratory Limited, EMC Laboratory has been registered and fully described in a report filed with the (ISED) Innovation, Science and Economic Development Canada. The acceptance letter from the ISED is maintained in our files. Registration 8058A.

Test Location

Shenzhen Anbotek Compliance Laboratory Limited.
1/F, Building D, Sogood Science and Technology Park, Sanwei community, Hangcheng Street, Bao'an District, Shenzhen, Guangdong, China.518102

3. Specific Absorption Rate (SAR)

3.1 Introduction

SAR is related to the rate at which energy is absorbed per unit mass in an object exposed to a radio field. The SAR distribution in a biological body is complicated and is usually carried out by experimental techniques or numerical modeling. The standard recommends limits for two tiers of groups, occupational/controlled and general population/uncontrolled, based on a person's awareness and ability to exercise control over his or her exposure. In general, occupational/controlled exposure limits are higher than the limits for general population/uncontrolled.

3.2 SAR Definition

The SAR definition is the time derivative (rate) of the incremental energy (dW) absorbed by (dissipated in) an incremental mass (dm) contained in a volume element (dv) of a given density (ρ).The equation description is as below:

$$\mathbf{SAR} = \frac{\mathbf{d}}{\mathbf{dt}}\left(\frac{\mathbf{dW}}{\mathbf{dm}}\right) = \frac{\mathbf{d}}{\mathbf{dt}}\left(\frac{\mathbf{dW}}{\boldsymbol{\rho}\mathbf{dv}}\right)$$

SAR is expressed in units of Watts per kilogram (W/kg)

SAR measurement can be either related to the temperature elevation in tissue by

$$\mathbf{SAR} = \mathbf{C}\left(\frac{\boldsymbol{\delta}\mathbf{T}}{\boldsymbol{\delta}\mathbf{t}}\right)$$

Where: C is the specific head capacity, δT is the temperature rise and δtisthe exposure duration, or related to the electrical field in the tissue by

$$\mathbf{SAR} = \frac{\boldsymbol{\sigma}|\mathbf{E}|^2}{\boldsymbol{\rho}}$$

Where: σ is the conductivity of the tissue, ρ is the mass density of the tissue and E is the RMS electrical field strength.

However for evaluating SAR of low power transmitter, electrical field measurement is typically applied.

4. SAR Measurement System

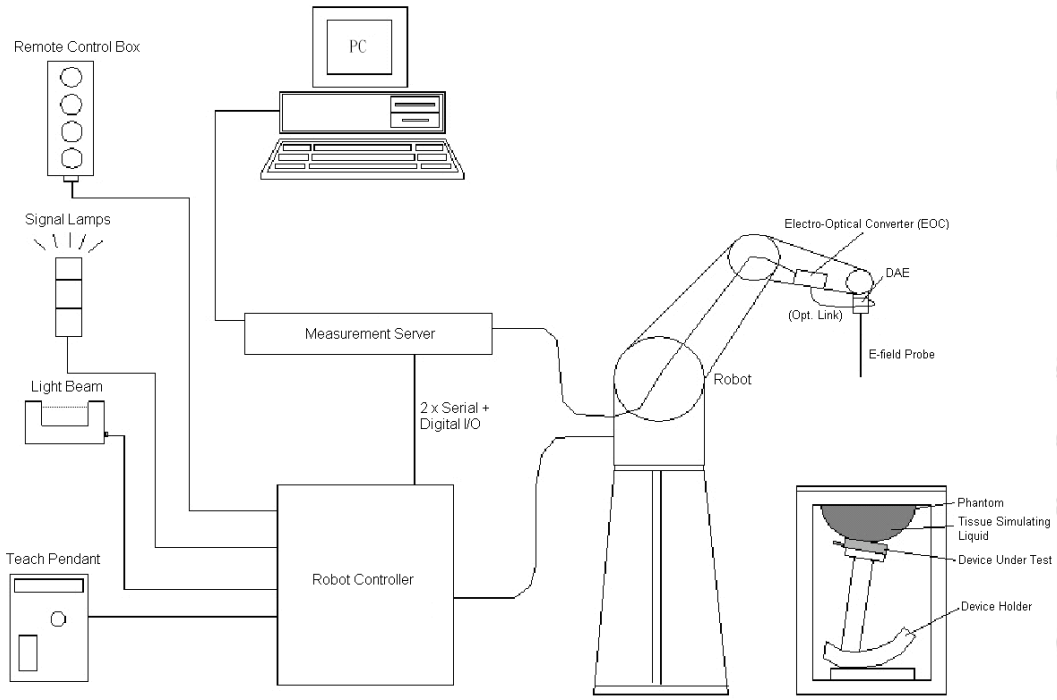

DASY System Configurations

The DASY system for performance compliance tests is illustrated above graphically. This system consists of the following items:

- A standard high precision 6-axis robot with controller, a teach pendant and software
- A data acquisition electronic (DAE) attached to the robot arm extension
- A dosimetric probe equipped with an optical surface detector system
- The electro-optical converter (EOC) performs the conversion between optical and electrical signals
- A measurement server performs the time critical tasks such as signal filtering, control of the robot operation and fast movement interrupts.
- A probe alignment unit which improves the accuracy of the probe positioning
- A computer operating Windows XP
- DASY software
- Remove control with teach pendant and additional circuitry for robot safety such as warming lamps, etc.
- The SAM twin phantom
- A device holder
- Tissue simulating liquid

- Dipole for evaluating the proper functioning of the system

components are described in details in the following sub-sections.

4.1 E-Field Probe

The SAR measurement is conducted with the dosimetric probe (manufactured by SPEAG).The probe is specially designed and calibrated for use in liquid with high permittivity. The dosimetric probe has special calibration in liquid at different frequency. This probe has a built in optical surface detection system to prevent from collision with phantom.

- **E-Field Probe Specification**

<EX3DV4 Probe>

Construction	Symmetrical design with triangular core Built-in shielding against static charges PEEK enclosure material (resistant to organic solvents, e.g., DGBE)	 **Photo of EX3DV4**
Frequency	10 MHz to 6 GHz; Linearity: ± 0.2 dB	
Directivity	± 0.3 dB in HSL (rotation around probe axis) ± 0.5 dB in tissue material (rotation normal to probe axis)	
Dynamic Range	10 μW/g to 100 mW/g; Linearity: ± 0.2 dB (noise: typically < 1 μW/g)	
Dimensions	Overall length: 330 mm (Tip: 20 mm) Tip diameter: 2.5 mm (Body: 12 mm) Typical distance from probe tip to dipole centers: 1 mm	

- **E-Field Probe Calibration**

Each probe needs to be calibrated according to a dosimetric assessment procedure with accuracy better than ± 10%. The spherical isotropy shall be evaluated and within ± 0.25dB. The sensitivity parameters (NormX, NormY, and NormZ), the diode compression parameter (DCP) and the conversion factor (ConvF) of the probe are tested. The calibration data can be referred to appendix C of this report.

4.2 Data Acquisition Electronics (DAE)

The data acquisition electronics (DAE) consists of a highly sensitive electrometer-grade preamplifier with auto-zeroing, a channel and gain-switching multiplexer, a fast 16 bit AD-converter and a command decoder and control logic unit. Transmission to the measurement server is accomplished through an optical downlink for data and status information as well as an optical uplink for commands

and the clock.

The input impedance of the DAE is 200MOhm; the inputs are symmetrical and floating. Common mode rejection is above 80dB.

Photo of DAE

4.3 Robot

The SPEAG DASY system uses the high precision robots (DASY5: TX60XL) type from Stäubli SA (France). For the 6-axis controller system, the robot controller version (DASY5: CS8c) from Stäubli is used. The Stäubli robot series have many features that are important for our application:

- High precision (repeatability ±0.035 mm)
- High reliability (industrial design)
- Jerk-free straight movements
- Low ELF interference (the closed metallic construction shields against motor control fields)

Photo of DASY5

4.4 Measurement Server

The measurement server is based on a PC/104 CPU board with CPU (DASY5: 400 MHz, Intel Celeron), chip disk (DASY5: 128 MB), RAM (DASY5: 128 MB). The necessary circuits for communication with the DAE electronic box, as well as the 16 bit AD converter system for optical detection and digital I/O interface are contained on the DASY I/O board, which is directly connected to the PC/104 bus of the CPU board.

The measurement server performs all the real-time data evaluation for field measurements and surface detection, controls robot movements and handles safety operations.

Photo of Server for DASY5

4.5 Phantom

<SAM Twin Phantom>

Shell Thickness	2 ± 0.2 mm; Center ear point: 6 ± 0.2 mm	 **Photo of SAM Phantom**
Filling Volume	Approx. 25 liters	
Dimensions	Length: 1000 mm; Width: 500 mm; Height: adjustable feet	
Measurement Areas	Left Hand, Right Hand, Flat Phantom	

The bottom plate contains three pair of bolts for locking the device holder. The device holder positions are adjusted to the standard measurement positions in the three sections. A white cover is provided to tap the phantom during off-periods to prevent water evaporation and changes in the liquid parameters. On the phantom top, three reference markers are provided to identify the phantom position with respect to the robot.

<ELI4 Phantom>

Shell Thickness	2 ± 0.2 mm (sagging: <1%)	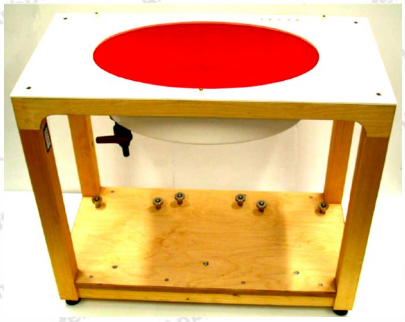 **Photo of ELI4 Phantom**
Filling Volume	Approx. 30 liters	
Dimensions	Major ellipse axis: 600 mm Minor axis:400 mm	

The ELI4 phantom is intended for compliance testing of handheld and body-mounted wireless devices in the frequency range of 30 MHz to 6 GHz. ELI4 is fully compatible with standard and all known tissue simulating liquids.

4.6 Device Holder

The SAR in the phantom is approximately inversely proportional to the square of the distance between the source and the liquid surface. For a source at 5 mm distance, a positioning uncertainty of ±0.5mm would produce a SAR uncertainty of ± 20%. Accurate device positioning is therefore crucial for accurate and repeatable measurements. The positions in which the devices must be measured are defined by the standards.

The DASY device holder is designed to cope with different positions given in the standard. It has two scales for the device rotation (with respect to the body axis) and the device inclination (with respect to the line between the ear reference points). The rotation center for both scales is the ear reference point (ERP).Thus the device needs no repositioning when changing the angles.

The DASY device holder is constructed of low-loss POM material having the following dielectric parameters: relative permittivity ε = 3 and loss tangent δ = 0.02. The amount of dielectric material has been reduced in the closest vicinity of the device, since measurements have suggested that the influence of the clamp on the test results could thus be lowered.

Device Holder

4.7 Data Storage and Evaluation

- Data Storage

The DASY software stores the assessed data from the data acquisition electronics as raw data (in microvolt readings from the probe sensors), together with all the necessary software parameters for the data evaluation (probe calibration data, liquid parameters and device frequency and modulation data) in measurement files. The post-processing software evaluates the desired unit and format for output each time the data is visualized or exported. This allows verification of the complete software setup even after the measurement and allows correction of erroneous parameter settings. For example, if a measurement has been performed with an incorrect crest factor parameter in the device setup, the parameter can be corrected afterwards and the data can be reevaluated.

The measured data can be visualized or exported in different units or formats, depending on the selected probe type (e.g., [V/m], [A/m], [mW/g]). Some of these units are not available in certain situations or give meaningless results, e.g., a SAR-output in a non-lose media, will always be zero. Raw data can also be exported to perform the evaluation with other software packages.

- Data Evaluation

The DASY post-processing software (SEMCAD) automatically executes the following procedures to calculate the field units from the microvolt readings at the probe connector. The parameters used in the evaluation are stored in the configuration modules of the software：

Probe parameters：	- Sensitivity	$Norm_i$, a_{i0}, a_{i1}, a_{i2}
	- Conversion factor	$ConvF_i$
	- Diode compression point	dcp_i
Device parameters：	- Frequency	f
	- Crest factor	cf
Media parameters：	- Conductivity	σ
	- Density	ρ

These parameters must be set correctly in the software. They can be found in the component documents or they can be imported into the software from the configuration files issued for the DASY components. In the direct measuring mode of the multi-meter option, the parameters of the actual system setup are used. In the scan visualization and export modes, the parameters stored in the corresponding document files are used.

The first step of the evaluation is a linearization of the filtered input signal to account for the compression characteristics of the detector diode. The compensation depends on the input signal, the diode type and the DC-transmission factor from the diode to the evaluation electronics. If the exciting field is pulsed, the crest factor of the signal must be known to correctly

compensate for peak power.

The formula for each channel can be given as:

$$\mathbf{V_i = U_i + U_i^2 \cdot \frac{cf}{dcp_i}}$$

with V_i= compensated signal of channel i, (i = x, y, z)

U_i = input signal of channel i, (i = x, y, z)

cf = crest factor of exciting field (DASY parameter)

dcp_i = diode compression point (DASY parameter)

From the compensated input signals, the primary field data for each channel can be evaluated:

E-field Probes: $\mathbf{E_i = \sqrt{\frac{V_i}{Norm_i \cdot ConvF}}}$

H-field Probes: $\mathbf{H_i = \sqrt{V_i} \cdot \frac{a_{i0}+a_{i1}f+a_{i2}f^2}{f}}$

with V_i = compensated signal of channel i,(i = x, y, z)

$Norm_i$= sensor sensitivity of channel i, (i = x, y, z), μV/(V/m)^2 for E-field Probes

ConvF= sensitivity enhancement in solution

a_{ij}= sensor sensitivity factors for H-field probes

f = carrier frequency [GHz]

E_i= electric field strength of channel i in V/m

H_i= magnetic field strength of channel i in A/m

The RSS value of the field components gives the total field strength (Hermitian magnitude):

$$\mathbf{E_{tot} = \sqrt{E_x^2 + E_y^2 + E_z^2}}$$

The primary field data are used to calculate the derived field units.

$$\mathbf{SAR = E_{tot}^2 \cdot \frac{\sigma}{\rho \cdot 1000}}$$

with SAR = local specific absorption rate in mW/g

E_{tot}= total field strength in V/m

σ = conductivity in [mho/m] or [Siemens/m]

ρ = equivalent tissue density in g/cm^3

Note that the density is set to 1, to account for actual head tissue density rather than the density of the tissue simulating liquid.

5. Test Equipment List

Manufacturer	Name of Equipment	Type/Model	Serial Number	Calibration	
				Last Cal.	Due Date
SPEAG	5GHz System Validation Kit	D5GHzV2	1160	Oct. 02, 2021	Oct. 01, 2024
SPEAG	2450MHz System Validation Kit	D2450V2	910	Jun. 15,2021	Jun. 14,2024
SPEAG	Data Acquisition Electronics	DAE4	387	Sept.06,2022	Sept.05,2023
SPEAG	Dosimetric E-Field Probe	EX3DV4	7396	May 06,2023	May 05,2024
Agilent	ENA Series Network Analyzer	E5071C	MY46317418	Oct.26, 2022	Oct.25, 2023
SPEAG	DAK	DAK-3.5	1226	NCR	NCR
SPEAG	ELI Phantom	QDOVA004AA	2058	NCR	NCR
AR	Amplifier	ZHL-42W	QA1118004	NCR	NCR
Agilent	Power Meter	N1914A	MY50001102	Oct.26, 2022	Oct.25, 2023
Agilent	Power Sensor	N8481H	MY51240001	Oct.26, 2022	Oct.25, 2023
R&S	Spectrum Analyzer	N9020A	MY51170037	Oct.26, 2022	Oct.25, 2023
Agilent	Signal Generation	N5182A	MY48180656	Oct.26, 2022	Oct.25, 2023
Worken	Directional Coupler	0110A05601O-10	COM5BNW1A2	Oct.26, 2022	Oct.25, 2023

Note:

1. The calibration certificate of DASY can be referred to appendix C of this report.
2. The dipole calibration interval can be extended to 3 years with justification. The dipoles are also not physically damaged, or repaired during the interval.
3. The Insertion Loss calibration of Dual Directional Coupler and Attenuator were characterized via the network analyzer and compensated during system check.
4. The dielectric probe kit was calibrated via the network analyzer, with the specified procedure (calibrated in pure water) and calibration kit (standard) short circuit, before the dielectric measurement. The specific procedure and calibration kit are provided by Agilent.
5. In system check we need to monitor the level on the power meter, and adjust the power amplifier level to have precise power level to the dipole; the measured SAR will be normalized to 1W input power according to the ratio of 1W to the input power to the dipole. For system check, the calibration of the power amplifier is deemed not critically required for correct measurement; the power meter is critical and we do have calibration for it

6. Tissue Simulating Liquids

For the measurement of the field distribution inside the SAM phantom with DASY, the phantom must be filled with around 25 liters of homogeneous body tissue simulating liquid. For head SAR testing, the liquid height from the ear reference point (ERP) of the phantom to the liquid top surface is larger than 15 cm, which is shown in Fig. 6.1. For body SAR testing, the liquid height from the center of the flat phantom to the liquid top surface is larger than 15 cm, which is shown as followed:

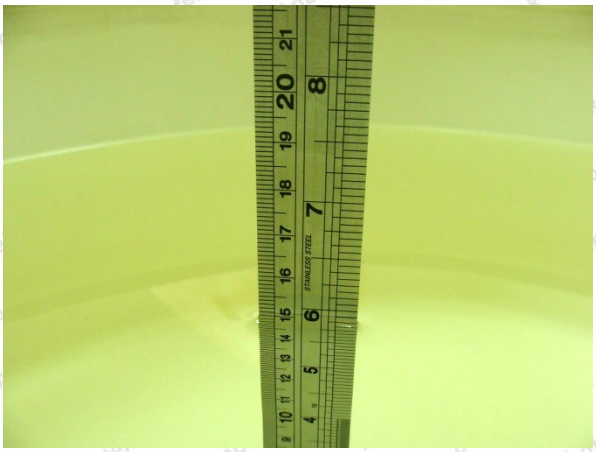

Photo of Liquid Height for Body SAR

The following table gives the recipes for tissue simulating liquid.

Frequency (MHz)	Water (%)	Sugar (%)	Cellulose (%)	Salt (%)	Preventol (%)	DGBE (%)	Conductivity (σ)	Permittivity (εr)
For Body								
2450	68.6	0	0	0	31.4	0	1.95	52.7
5200	78.6	0	10.7	0	10.7	0	5.27	49.0
5800	78.5	0	10.8	0	10.7	0	6.00	48.2

The following table shows the measuring results for simulating liquid.

Tissue Type	Measured Frequency (MHz)	Target Tissue		Measured Tissue				Liquid Temp. (℃)	Test Date
		ε_r	σ	ε_r	Dev. (%)	σ	Dev. (%)		
2450MSL	2450	52.70	1.95	52.14	-1.07	1.88	-3.72	22.5	07/03/2023
5200MSL	5200	49.00	5.27	48.14	-1.79	5.16	-2.13	22.6	07/04/2023
5800MSL	5800	48.20	6.00	48.54	0.70	5.74	-4.53	22.7	07/05/2023

7. System Verification Procedures

Each DASY system is equipped with one or more system validation kits. These units, together with the predefined measurement procedures within the DASY software, enable the user to conduct the system performance check and system validation. System validation kit includes a dipole, tripod holder to fix it underneath the flat phantom and a corresponding distance holder.

- **Purpose of System Performance check**

  The system performance check verifies that the system operates within its specifications. System and operator errors can be detected and corrected. It is recommended that the system performance check be performed prior to any usage of the system in order to guarantee reproducible results. The system performance check uses normal SAR measurements in a simplified setup with a well characterized source. This setup was selected to give a high sensitivity to all parameters that might fail or vary over time. The system check does not intend to replace the calibration of the components, but indicates situations where the system uncertainty is exceeded due to drift or failure.

- **System Setup**

  In the simplified setup for system evaluation, the EUT is replaced by a calibrated dipole and the power source is replaced by a continuous wave that comes from a signal generator. The calibrated dipole must be placed beneath the flat phantom section of the SAM twin phantom with the correct distance holder. The distance holder should touch the phantom surface with a light pressure at the reference marking and be oriented parallel to the long side of the phantom. The equipment setup is shown below:

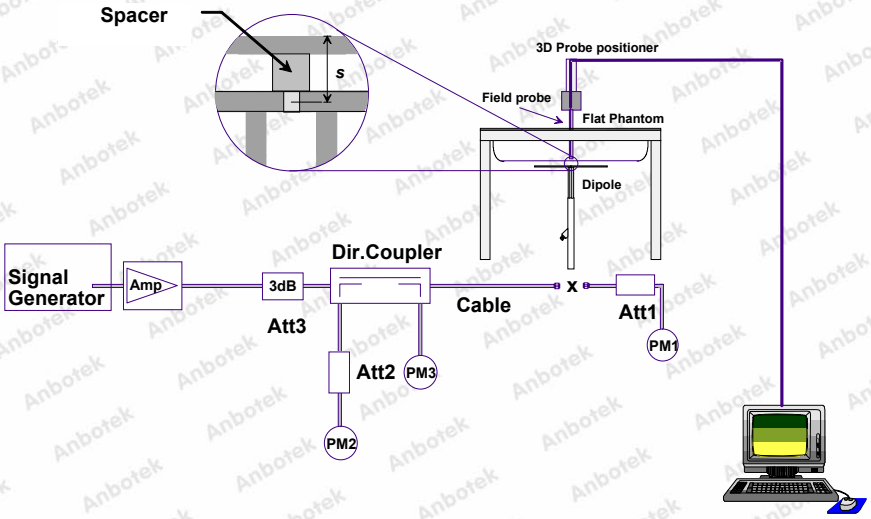

System Setup for System Evaluation

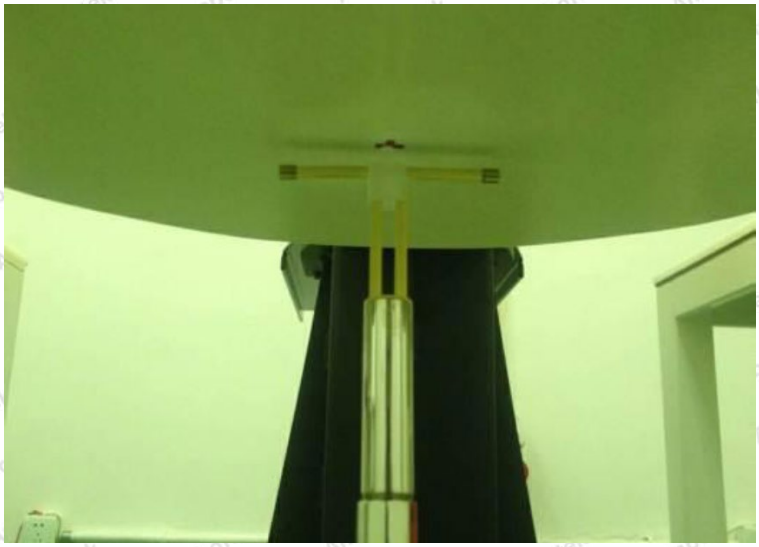

Photo of Dipole Setup

Validation Results

Comparing to the original SAR value provided by SPEAG, the verification data should be within its specification of 10%. The table below shows the target SAR and measured SAR after normalized to 1W input power. It indicates that the system performance check can meet the variation criterion and the plots can be referred to Appendix A of this report.

Frequency (MHz)	Liquid Type	Power fed onto reference dipole (mW)	Targeted SAR (W/kg)	Measured SAR (W/kg)	Normalized SAR (W/kg)	Deviation (%)	Test Date
2450	Body	250	51.8	12.69	50.76	-2.01	07/03/2023
5200	Body	100	77.8	7.63	76.30	-1.93	07/04/2023
5800	Body	100	78.3	7.95	79.50	1.53	07/05/2023

Target and Measurement SAR after Normalized

8. EUT Testing Position

This EUT was tested in five different positions. They are Horizontal-Up/ Horizontal-Down/ Vertical-Front/ Vertical-Down/ Top Side of the EUT with phantom 0mm gap, as illustrated bellow, please refer to for Appendix A the test setup photos.

8.1 Body Worn Position

The body-worn accessory SAR test configurations may overlap for handsets. When the same wireless mode transmission configurations for voice and data are required for SAR measurements, the more conservative configuration with a smaller separation distance should be tested for the overlapping SAR configurations. This typically applies to the back and front surfaces of a handset when SAR is required for both hotspot mode and body-worn accessory exposure conditions. Depending on the form factor and dimensions of a device, the test separation distance used for hotspot mode SAR measurement is either 10 mm or that used in the body-worn accessory configuration, whichever is less for devices with dimension > 9 cm x 5 cm. For smaller devices with dimensions ≤ 9 cm x 5 cm because of a greater potential for next to body use a test separation of ≤ 5 mm must be used.

8.1. USB connector orientations on laptop computers

(A) Horizontal-Up (B) Horizontal-Down (C) Vertical-Front (D) Vertical-Back

Note: These are USB connector orientations on laptop computers; USB dongles have the reverse configuration for plugging into the corresponding laptop computers.

9. Measurement Procedures

The measurement procedures are as follows:

(a) Use base station simulator (if applicable) or engineering software to transmit RF power continuously (continuous Tx) in the middle channel.
(b) Keep EUT to radiate maximum output power or 100% duty factor (if applicable)
(c) Measure output power through RF cable and power meter.
(d) Place the EUT in the positions as setup photos demonstrates.
(e) Set scan area, grid size and other setting on the DASY software.
(f) Measure SAR transmitting at the middle channel for all applicable exposure positions.
(g) Identify the exposure position and device configuration resulting the highest SAR
(h) Measure SAR at the lowest and highest channels at the worst exposure position and device configuration if applicable.

According to the test standard, the recommended procedure for assessing the peak spatial-average SAR value consists of the following steps:

(a) Power reference measurement
(b) Area scan
(c) Zoom scan
(d) Power drift measurement

9.1 Spatial Peak SAR Evaluation

The procedure for spatial peak SAR evaluation has been implemented according to the test standard. It can be conducted for 1g and 10g, as well as for user-specific masses. The DASY software includes all numerical procedures necessary to evaluate the spatial peak SAR value.

The base for the evaluation is a "cube" measurement. The measured volume must include the 1g and 10g cubes with the highest averaged SAR values. For that purpose, the center of the measured volume is aligned to the interpolated peak SAR value of a previously performed area scan.

The entire evaluation of the spatial peak values is performed within the post-processing engine (SEMCAD). The system always gives the maximum values for the 1g and 10g cubes. The algorithm to find the cube with highest averaged SAR is divided into the following stages:

(a) Extraction of the measured data (grid and values) from the Zoom Scan
(b) Calculation of the SAR value at every measurement point based on all stored data (A/D values and measurement parameters)
(c) Generation of a high-resolution mesh within the measured volume
(d) Interpolation of all measured values form the measurement grid to the high-resolution grid
(e) Extrapolation of the entire 3-D field distribution to the phantom surface over the distance from

sensor to surface

(f) Calculation of the averaged SAR within masses of 1g and 10g

9.2 Power Reference Measurement

The Power Reference Measurement and Power Drift Measurements are for monitoring the power drift of the device under test in the batch process. The minimum distance of probe sensors to surface determines the closest measurement point to phantom surface. This distance cannot be smaller than the distance of sensor calibration points to probe tip as defined in the probe properties.

9.3 Area Scan Procedures

The area scan is used as a fast scan in two dimensions to find the area of high field values, before doing a fine measurement around the hot spot. The sophisticated interpolation routines implemented in DASY software can find the maximum found in the scanned area, within a range of the global maximum. The range (in dB0 is specified in the standards for compliance testing. For example, a 2 dB range is required in IEEE standard 1528 and IEC 62209 standards, whereby 3 dB is a requirement when compliance is assessed in accordance with the ARIB standard (Japan), if only one zoom scan follows the area scan, then only the absolute maximum will be taken as reference. For cases where multiple maximums are detected, the number of zoom scans has to be increased accordingly.

Area scan parameters extracted from FCC KDB 865664 D01 SAR measurement 100 MHz to 6 GHz.

	≤ 3 GHz	> 3 GHz
Maximum distance from closest measurement point (geometric center of probe sensors) to phantom surface	5 ± 1 mm	½·δ·ln(2) ± 0.5 mm
Maximum probe angle from probe axis to phantom surface normal at the measurement location	30° ± 1°	20° ± 1°
Maximum area scan spatial resolution: Δx_{Area}, Δy_{Area}	≤ 2 GHz: ≤ 15 mm 2 – 3 GHz: ≤ 12 mm	3 – 4 GHz: ≤ 12 mm 4 – 6 GHz: ≤ 10 mm
	When the x or y dimension of the test device, in the measurement plane orientation, is smaller than the above, the measurement resolution must be ≤ the corresponding x or y dimension of the test device with at least one measurement point on the test device.	

9.4 Zoom Scan Procedures

Zoom scans are used assess the peak spatial SAR values within a cubic averaging volume containing 1 gram and 10gram of simulated tissue. The zoom scan measures points (refer to table below) within a cube shoes base faces are centered on the maxima found in a preceding area scan job within the same procedure. When the measurement is done, the zoom scan evaluates the averaged SAR for 1 gram and 10 gram and displays these values next to the job's label.

Zoom scan parameters extracted from FCC KDB 865664 D01 SAR measurement 100 MHz to 6 GHz.

			≤ 3 GHz	> 3 GHz
Maximum zoom scan spatial resolution: Δx_{Zoom}, Δy_{Zoom}			≤ 2 GHz: ≤ 8 mm 2 – 3 GHz: ≤ 5 mm*	3 – 4 GHz: ≤ 5 mm* 4 – 6 GHz: ≤ 4 mm*
Maximum zoom scan spatial resolution, normal to phantom surface	uniform grid: $\Delta z_{Zoom}(n)$		≤ 5 mm	3 – 4 GHz: ≤ 4 mm 4 – 5 GHz: ≤ 3 mm 5 – 6 GHz: ≤ 2 mm
	graded grid	$\Delta z_{Zoom}(1)$: between 1st two points closest to phantom surface	≤ 4 mm	3 – 4 GHz: ≤ 3 mm 4 – 5 GHz: ≤ 2.5 mm 5 – 6 GHz: ≤ 2 mm
		$\Delta z_{Zoom}(n>1)$: between subsequent points	$\leq 1.5 \cdot \Delta z_{Zoom}(n-1)$	
Minimum zoom scan volume	x, y, z		≥ 30 mm	3 – 4 GHz: ≥ 28 mm 4 – 5 GHz: ≥ 25 mm 5 – 6 GHz: ≥ 22 mm

Note: δ is the penetration depth of a plane-wave at normal incidence to the tissue medium; see draft standard IEEE P1528-2011 for details.

* When zoom scan is required and the *reported* SAR from the *area scan based 1-g SAR estimation* procedures of KDB 447498 is ≤ 1.4 W/kg, ≤ 8 mm, ≤ 7 mm and ≤ 5 mm zoom scan resolution may be applied, respectively, for 2 GHz to 3 GHz, 3 GHz to 4 GHz and 4 GHz to 6 GHz.

9.5 Volume Scan Procedures

The volume scan is used for assess overlapping SAR distributions for antennas transmitting in different frequency bands. It is equivalent to an oversized zoom scan used in standalone measurements. The measurement volume will be used to enclose all the simultaneous transmitting antennas. For antennas transmitting simultaneously in different frequency bands, the volume scan is measured separately in each frequency band. In order to sum correctly to compute the 1g aggregate SAR, the EUT remain in the same test position for all measurements and all volume scan use the same spatial resolution and grid spacing. When all volume scan were completed, the software, SEMCAD postprocessor can combine and subsequently superpose these measurement data to calculating the multiband SAR.

9.6 Power Drift Monitoring

All SAR testing is under the EUT install full charged battery and transmit maximum output power. In DASY measurement software, the power reference measurement and power drift measurement procedures are used for monitoring the power drift of EUT during SAR test. Both these procedures measure the field at a specified reference position before and after the SAR testing. The software will calculate the field difference in dB. If the power drift more than 5%, the SAR will be retested.

10. Conducted Power

<WIFI 2.4GHz Conducted Power>

ANT 1:

Mode	Channel	Frequency (MHz)	Peak Power (dBm)	Average Power(dBm)	Tune-Up Limit(dBm)	Test Rate Data
802.11 b	1	2412	15.01	**14.01**	14.50	1 Mbps
	6	2437	14.32	13.32	14.50	1 Mbps
	11	2462	14.57	13.57	14.50	1 Mbps
802.11 g	1	2412	16.02	13.22	13.50	6 Mbps
	6	2437	15.48	12.68	13.50	6 Mbps
	11	2462	15.32	12.52	13.50	6 Mbps
802.11 N(HT20)	1	2412	16.01	13.11	13.50	MCS0
	6	2437	15.45	12.55	13.50	MCS0
	11	2462	15.09	12.19	13.50	MCS0
802.11 N(HT40)	3	2422	15.20	13.20	13.50	MCS0
	6	2437	14.92	12.92	13.50	MCS0
	9	2452	15.43	13.43	13.50	MCS0

ANT 2:

Mode	Channel	Frequency (MHz)	Peak Power (dBm)	Average Power(dBm)	Tune-Up Limit(dBm)	Test Rate Data
802.11 b	1	2412	11.38	10.38	10.50	1 Mbps
	6	2437	11.12	10.12	10.50	1 Mbps
	11	2462	10.86	9.86	10.50	1 Mbps
802.11 g	1	2412	13.83	**11.03**	11.50	6 Mbps
	6	2437	13.30	10.50	11.50	6 Mbps
	11	2462	13.13	10.33	11.50	6 Mbps
802.11 N(HT20)	1	2412	13.72	10.82	11.00	MCS0
	6	2437	13.22	10.32	11.00	MCS0
	11	2462	13.13	10.23	11.00	MCS0
802.11 N(HT40)	3	2422	12.99	10.99	11.00	MCS0
	6	2437	12.59	10.59	11.00	MCS0
	9	2452	12.54	10.54	11.00	MCS0

MIMO:

Test Mode	Channel	Frequency (MHz)	Conducted Average Output Power(dBm)			Maximum Tune-Up(dBm)	Test Rate Data
			Antenna 1	Antenna 2	Total		
802.11 n(HT20)	1	2412	13.11	10.82	15.12	15.50	MCS0
	6	2437	12.55	10.32	14.59	15.50	MCS0
	11	2462	12.19	10.23	14.33	15.50	MCS0
802.11 n(HT40)	3	2422	13.20	10.99	15.24	15.50	MCS0
	6	2437	12.92	10.59	14.92	15.50	MCS0
	9	2452	13.43	10.54	15.23	15.50	MCS0

Note:

1. Per KDB 447498 D01 v06, the test distance less than 5mm
2. Per KDB 248227 D01, choose the highest output power channel to test SAR and determine further SAR exclusion.
3. Per KDB 248227 D01, In the 2.4 GHz band, separate SAR procedures are applied to DSSS and OFDM configurations to simplify DSSS test requirements. SAR is not required for the following 2.4 GHz OFDM conditions:
   1) When KDB Publication 447498 SAR test exclusion applies to the OFDM configuration.
   2) When the highest reported SAR for DSSS is adjusted by the ratio of OFDM to DSSS specified maximum output power and the adjusted SAR is ≤ 1.2 W/kg.

<WIFI 5GHz Conducted Power>

Band 1

ANT 1:

TestMode	Channel	Average Power[dBm]	Tune-Up Limit(dBm)	Test Rate Data
11A	5180	13.59	14.00	6M
	5200	13.57	14.00	6M
	5240	12.87	14.00	6M
11N20	5180	13.62	14.00	MCS0
	5200	13.78	14.00	MCS0
	5240	13.38	14.00	MCS0
11N40	5190	13.90	14.50	MCS0
	5230	14.29	14.50	MCS0
11AC20	5180	13.55	14.00	MCS0
	5200	13.57	14.00	MCS0
	5240	13.61	14.00	MCS0
11AC40	5190	**15.03**	15.50	MCS0
	5230	12.97	15.50	MCS0
11AC80	5210	14.15	14.50	MCS0

ANT 2:

TestMode	Channel	Average Power[dBm]	Tune-Up Limit(dBm)	Test Rate Data
11A	5180	13.47	14.00	6M
	5200	13.34	14.00	6M
	5240	13.47	14.00	6M
11N20	5180	13.78	14.50	MCS0
	5200	13.74	14.50	MCS0
	5240	14.43	14.50	MCS0
11N40	5190	13.98	14.00	MCS0
	5230	13.45	14.00	MCS0
11AC20	5180	14.41	14.50	MCS0
	5200	13.81	14.50	MCS0
	5240	13.39	14.50	MCS0
11AC40	5190	**15.31**	15.50	MCS0
	5230	13.14	15.50	MCS0
11AC80	5210	14.23	14.50	MCS0

MIMO:

Test Mode	Frequency (MHz)	Conducted Average Output Power(dBm)			Maximum Tune-Up(dBm)	Test Rate Data
		Antenna 1	Antenna 2	Total		
802.11 N(HT20)	5180	13.62	13.78	16.71	17.00	MCS0
	5200	13.78	13.74	16.77	17.00	MCS0
	5240	13.38	14.43	16.95	17.00	MCS0
802.11 N(HT40)	5190	13.90	13.98	16.95	17.00	MCS0
	5230	14.29	13.45	16.90	17.00	MCS0
802.11 AC(HT20)	5180	13.55	14.41	17.01	17.50	MCS0
	5200	13.57	13.81	16.70	17.50	MCS0
	5240	13.61	13.39	16.51	17.50	MCS0
802.11 AC(HT40)	5190	15.03	15.31	18.18	18.50	MCS0
	5230	12.97	13.14	16.07	18.50	MCS0
802.11 AC(HT80)	5210	14.15	14.23	17.20	17.50	MCS0

Band 4

ANT 1:

TestMode	Channel	Average Power[dBm]	Tune-Up Limit(dBm)	Test Rate Data
11A	5745	14.70	16.00	6M
	5785	15.83	16.00	6M
	5825	15.76	16.00	6M
11N20	5745	14.54	16.00	MCS0
	5785	15.69	16.00	MCS0
	5825	15.40	16.00	MCS0
11N40	5755	15.25	16.00	MCS0
	5795	15.93	16.00	MCS0
11AC20	5745	14.80	16.00	MCS0
	5785	15.80	16.00	MCS0
	5825	15.52	16.00	MCS0
11AC40	5755	**16.39**	16.50	MCS0
	5795	15.35	16.50	MCS0
11AC80	5775	15.44	15.50	MCS0

ANT 2:

TestMode	Channel	Average Power[dBm]	Tune-Up Limit(dBm)	Test Rate Data
11A	5745	13.61	14.50	6M
	5785	14.47	14.50	6M
	5825	14.26	14.50	6M
11N20	5745	13.16	14.50	MCS0
	5785	14.16	14.50	MCS0
	5825	14.02	14.50	MCS0
11N40	5755	13.73	14.50	MCS0
	5795	14.45	14.50	MCS0
11AC20	5745	13.36	14.50	MCS0
	5785	14.30	14.50	MCS0
	5825	14.03	14.50	MCS0
11AC40	5755	**14.91**	15.00	MCS0
	5795	13.74	15.00	MCS0
11AC80	5775	14.06	14.50	MCS0

MIMO:

Test Mode	Frequency (MHz)	Conducted Average Output Power(dBm)			Maximum Tune-Up(dBm)	Test Rate Data
		Antenna 1	Antenna 2	Total		
802.11 N(HT20)	5745	14.54	13.16	16.91	18.00	MCS0
	5785	15.69	14.16	18.00	18.00	MCS0
	5825	15.40	14.02	17.77	18.00	MCS0
802.11 N(HT40)	5755	15.25	13.73	17.57	18.50	MCS0
	5795	15.93	14.45	18.26	18.50	MCS0
802.11 AC(HT20)	5745	14.80	13.36	17.15	18.50	MCS0
	5785	15.80	14.30	18.12	18.50	MCS0
	5825	15.52	14.03	17.85	18.50	MCS0
802.11 AC(HT40)	5755	16.39	14.91	18.72	19.00	MCS0
	5795	15.35	13.74	17.63	19.00	MCS0
802.11 AC(HT80)	5775	15.44	14.06	17.81	18.00	MCS0

Note:

1. Per KDB 447498 D02 v02r01, the test distance less than 5mm
2. Per KDB 248227 D01, choose the highest output power channel to test SAR and determine further SAR exclusion.
3. Per KDB 248227 D01, In the 5 GHz band, separate SAR procedures are applied to DSSS and

OFDM configurations to simplify DSSS test requirements. SAR is not required for the following 5 GHz OFDM conditions:

1) When KDB Publication 447498 SAR test exclusion applies to the OFDM configuration.

2) When the highest reported SAR for DSSS is adjusted by the ratio of OFDM to DSSS specified maximum output power and the adjusted SAR is ≤ 1.2 W/kg.

11. Antenna Location

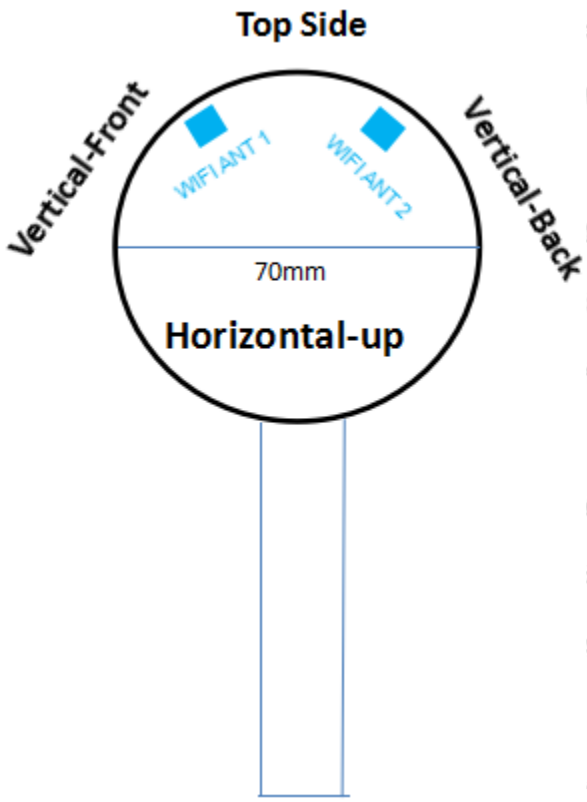

Distance of The Antenna to the EUT surface and edge						
Antennas	**Front**	**Back**	**Top Side**	**Bottom Side**	**Left Side**	**Right Side**
WiFi ANT 1	<25mm	<25mm	<25mm	>25mm	<25mm	<25mm
WiFi ANT 2	<25mm	<25mm	<25mm	>25mm	<25mm	<25mm

12. SAR Test Results Summary

General Note:

1. Per KDB 447498 D01 v06, the reported SAR is the measured SAR value adjusted for maximum tune-up tolerance.

   Scaling Factor = tune-up limit power (mW) / EUT RF power (mW), where tune-up limit is the maximum rated power among all production units.

   Reported SAR(W/kg)= Measured SAR(W/kg) Scaling Factor*

2. Per KDB 447498 D01 v06, for each exposure position, if the highest output channel reported SAR≤0.8W/kg, other channels SAR testing are not necessary

<WIFI 2.4GHz>

ANT 1:

Plot No.	Band	Mode	Test Position	Gap (mm)	Ch.	Freq. (MHz)	Average Power (dBm)	Tune-Up Limit (dBm)	Scaling Factor	Power Drift (dB)	Measured SAR_{1g} (W/kg)	Reported SAR_{1g} (W/kg)
#1	WIFI 2.4GHz	802.11b	Vertical-Front	5	1	2412	14.01	14.50	1.119	-0.10	0.653	**0.731**
	WIFI 2.4GHz	802.11b	Vertical-Back	5	1	2412	14.01	14.50	1.119	0.07	0.209	0.234
	WIFI 2.4GHz	802.11b	Horizontal-Up	5	1	2412	14.01	14.50	1.119	0.01	0.523	0.585
	WIFI 2.4GHz	802.11b	Horizontal-Down	5	1	2412	14.01	14.50	1.119	0.03	0.256	0.287
	WIFI 2.4GHz	802.11b	Top	5	1	2412	14.01	14.50	1.119	0.05	0.554	0.620

ANT 2:

Plot No.	Band	Mode	Test Position	Gap (mm)	Ch.	Freq. (MHz)	Average Power (dBm)	Tune-Up Limit (dBm)	Scaling Factor	Power Drift (dB)	Measured SAR_{1g} (W/kg)	Reported SAR_{1g} (W/kg)
	WIFI 2.4GHz	802.11g	Vertical-Front	5	1	2412	11.03	11.50	1.114	0.15	0.158	0.176
#2	WIFI 2.4GHz	802.11g	Vertical-Back	5	1	2412	11.03	11.50	1.114	0.05	0.513	**0.572**
	WIFI 2.4GHz	802.11g	Horizontal-Up	5	1	2412	11.03	11.50	1.114	0.02	0.421	0.469
	WIFI 2.4GHz	802.11g	Horizontal-Down	5	1	2412	11.03	11.50	1.114	0.04	0.213	0.237
	WIFI 2.4GHz	802.11g	Top	5	1	2412	11.03	11.50	1.114	0.06	0.455	0.507

<WIFI 5GHz>

ANT 1:

Plot No.	Band	Mode	Test Position	Gap (mm)	Ch.	Freq. (MHz)	Average Power (dBm)	Tune-Up Limit (dBm)	Scaling Factor	Power Drift (dB)	Measured SAR_{1g} (W/kg)	Reported SAR_{1g} (W/kg)
#3	WIFI 5.2GHz	802.11 AC(HT40)	Vertical-Front	5	38	5190	15.03	15.50	1.114	-0.05	0.628	**0.700**
	WIFI 5.2GHz	802.11 AC(HT40)	Vertical-Back	5	38	5190	15.03	15.50	1.114	0.06	0.225	0.251
	WIFI 5.2GHz	802.11 AC(HT40)	Horizontal-Up	5	38	5190	15.03	15.50	1.114	0.07	0.522	0.582
	WIFI 5.2GHz	802.11 AC(HT40)	Horizontal-Down	5	38	5190	15.03	15.50	1.114	0.03	0.333	0.371
	WIFI 5.2GHz	802.11 AC(HT40)	Top	5	38	5190	15.03	15.50	1.114	0.09	0.546	0.608

ANT 2:

Plot No.	Band	Mode	Test Position	Gap (mm)	Ch.	Freq. (MHz)	Average Power (dBm)	Tune-Up Limit (dBm)	Scaling Factor	Power Drift (dB)	Measured SAR_{1g} (W/kg)	Reported SAR_{1g} (W/kg)
	WIFI 5.2GHz	802.11 AC(HT40)	Vertical-Front	5	38	5190	15.31	15.50	1.045	0.15	0.263	0.275
#4	WIFI 5.2GHz	802.11 AC(HT40)	Vertical-Back	5	38	5190	15.31	15.50	1.045	0.11	0.688	**0.719**
	WIFI 5.2GHz	802.11 AC(HT40)	Horizontal-Up	5	38	5190	15.31	15.50	1.045	0.09	0.544	0.568
	WIFI 5.2GHz	802.11 AC(HT40)	Horizontal-Down	5	38	5190	15.31	15.50	1.045	0.07	0.346	0.361
	WIFI 5.2GHz	802.11 AC(HT40)	Top	5	38	5190	15.31	15.50	1.045	0.05	0.568	0.593

ANT 1:

Plot No.	Band	Mode	Test Position	Gap (mm)	Ch.	Freq. (MHz)	Average Power (dBm)	Tune-Up Limit (dBm)	Scaling Factor	Power Drift (dB)	Measured SAR_{1g} (W/kg)	Reported SAR_{1g} (W/kg)
#5	WIFI 5.8GHz	802.11 AC(HT40)	Vertical-Front	5	151	5755	16.39	16.50	1.026	0.11	0.713	**0.731**
	WIFI 5.8GHz	802.11 AC(HT40)	Vertical-Back	5	151	5755	16.39	16.50	1.026	-0.05	0.312	0.320
	WIFI 5.8GHz	802.11 AC(HT40)	Horizontal-Up	5	151	5755	16.39	16.50	1.026	0.02	0.579	0.594
	WIFI 5.8GHz	802.11 AC(HT40)	Horizontal-Down	5	151	5755	16.39	16.50	1.026	0.09	0.365	0.374
	WIFI 5.8GHz	802.11 AC(HT40)	Top	5	151	5755	16.39	16.50	1.026	0.05	0.598	0.613

ANT 2:

Plot No.	Band	Mode	Test Position	Gap (mm)	Ch.	Freq. (MHz)	Average Power (dBm)	Tune-Up Limit (dBm)	Scaling Factor	Power Drift (dB)	Measured SAR_{1g} (W/kg)	Reported SAR_{1g} (W/kg)
	WIFI 5.8GHz	802.11 AC(HT40)	Vertical-Front	5	151	5755	14.91	15.00	1.021	-0.05	0.244	0.249
#6	WIFI 5.8GHz	802.11 AC(HT40)	Vertical-Back	5	151	5755	14.91	15.00	1.021	0.15	0.654	**0.668**
	WIFI 5.8GHz	802.11 AC(HT40)	Horizontal-Up	5	151	5755	14.91	15.00	1.021	0.08	0.543	0.554
	WIFI 5.8GHz	802.11 AC(HT40)	Horizontal-Down	5	151	5755	14.91	15.00	1.021	0.05	0.296	0.302
	WIFI 5.8GHz	802.11 AC(HT40)	Top	5	151	5755	14.91	15.00	1.021	0.02	0.567	0.579

13. Simultaneous Transmission Analysis

Simultaneous TX SAR Considerations

No.	Applicable Simultaneous Transmission
1.	WIFI 2.4G ANT1 +WIFI 2.4G ANT2
2.	WIFI 5.2G ANT1 +WIFI 5.2G ANT2
3.	WIFI 5.8G ANT1 +WIFI 5.8G ANT2

Simultaneous Transmission Procedures

This device contains transmitters that may operate simultaneously. Therefore simultaneous transmission analysis is required. Per FCC KDB 447498 D01v05r02, simultaneous transmission SAR test exclusion may be applied when the sum of the 1-g SAR for all the simultaneous transmitting antennas in a specific a physical test configuration is ≤ 1.6 W/kg.

.

Evaluation of Simultaneous SAR

WIFI 2.4G ANT1 +WIFI 2.4G ANT2:

Test Position	WiFi ANT 1 SAR_{1-g} (W/Kg)	WiFi ANT 2 SAR_{1-g} (W/Kg)	MAX. ΣSAR_{1-g} (W/Kg)	SAR_{1-g} Limit (W/Kg)	Simut. Meas. Required
Vertical-Front	**0.731**	0.176	0.907	1.6	N/A
Vertical-Back	0.234	**0.572**	0.806	1.6	N/A
Horizontal-Up	0.585	0.469	1.054	1.6	N/A
Horizontal-Down	0.287	0.237	0.524	1.6	N/A
Top	0.620	0.507	**1.127**	1.6	N/A

WIFI 5.2G ANT1 +WIFI 5.2G ANT2:

Test Position	WiFi ANT 1 SAR_{1-g} (W/Kg)	WiFi ANT 2 SAR_{1-g} (W/Kg)	MAX. ΣSAR_{1-g} (W/Kg)	SAR_{1-g} Limit (W/Kg)	Simut. Meas. Required
Vertical-Front	**0.700**	0.275	0.975	1.6	N/A
Vertical-Back	0.251	**0.719**	0.970	1.6	N/A
Horizontal-Up	0.582	0.568	1.150	1.6	N/A
Horizontal-Down	0.371	0.361	0.732	1.6	N/A
Top	0.608	0.593	**1.201**	1.6	N/A

WIFI 5.8G ANT1 +WIFI 5.8G ANT2:

Test Position	WiFi ANT 1 SAR_{1-g} (W/Kg)	WiFi ANT 2 SAR_{1-g} (W/Kg)	MAX. ΣSAR_{1-g} (W/Kg)	SAR_{1-g} Limit (W/Kg)	Simut. Meas. Required
Vertical-Front	**0.731**	0.249	0.980	1.6	N/A
Vertical-Back	0.320	**0.668**	0.988	1.6	N/A
Horizontal-Up	0.594	0.554	1.148	1.6	N/A
Horizontal-Down	0.374	0.302	0.676	1.6	N/A
Top	0.613	0.579	**1.192**	1.6	N/A

14. Measurement Uncertainty

NO	Source	Uncert. ai（%）	Prob. Dist.	Div. k	ci (1g)	ci (10g)	Stand.Uncert. ui (1g)	Stand.Uncert. ui (10g)	*Veff*
1	Repeat	0. 4	N	1	1	1	0. 4	0. 4	9
Instrument									
2	Probe calibration	7	N	2	1	1	3.5	3.5	∞
3	Axial isotropy	4.7	R	$\sqrt{3}$	0.7	0.7	1.9	1.9	∞
4	Hemispherical isotropy	9.4	R	$\sqrt{3}$	0.7	0.7	3.9	3.9	∞
5	Boundary effect	1.0	R	$\sqrt{3}$	1	1	0.6	0.6	∞
6	Linearity	4.7	R	$\sqrt{3}$	1	1	2.7	2.7	∞
7	Detection limits	1.0	R	$\sqrt{3}$	1	1	0.6	0.6	∞
8	Readout electronics	0.3	N	1	1	1	0.3	0.3	∞
9	Response time	0.8	R	$\sqrt{3}$	1	1	0.5	0.5	∞
10	Integration time	2.6	R	$\sqrt{3}$	1	1	1.5	1.5	∞
11	Ambient noise	3.0	R	$\sqrt{3}$	1	1	1.7	1.7	∞
12	Ambient reflections	3.0	R	$\sqrt{3}$	1	1	1.7	1.7	∞
13	Probe positioner mech. restrictions	0.4	R	$\sqrt{3}$	1	1	0.2	0.2	∞
14	Probe positioning with respect to phantom shell	2.9	R	$\sqrt{3}$	1	1	1.7	1.7	∞

15	Max.SAR evaluation	1.0	R	$\sqrt{3}$	1	1	0.6	0.6	∞

Test sample related									
16	Device positioning	3.8	N	1	1	1	3.8	3.8	99
17	Device holder	5.1	N	1	1	1	5.1	5.1	5
18	Drift of output power	5.0	R	$\sqrt{3}$	1	1	2.9	2.9	∞
Phantom and set-up									
19	Phantom uncertainty	4.0	R	$\sqrt{3}$	1	1	2.3	2.3	∞
20	Liquid conductivity (target)	5.0	R	$\sqrt{3}$	0.64	0.43	1.8	1.2	∞
21	Liquid conductivity (meas)	2.5	N	1	0.64	0.43	1.6	1.2	∞
22	Liquid Permittivity (target)	5.0	R	$\sqrt{3}$	0.6	0.49	1.7	1.5	∞
23	Liquid Permittivity (meas)	2.5	N	1	0.6	0.49	1.5	1.2	∞
Combined standard			RSS	$U_C = \sqrt{\sum_{i=1}^{n} C_i^2 U_i^2}$			11.4%	11.3%	236
Expanded uncertainty(P=95%)		$U_c = k U$,k=2					**22.8%**	**22.6%**	

Appendix A. EUT Photos and Test Setup Photos

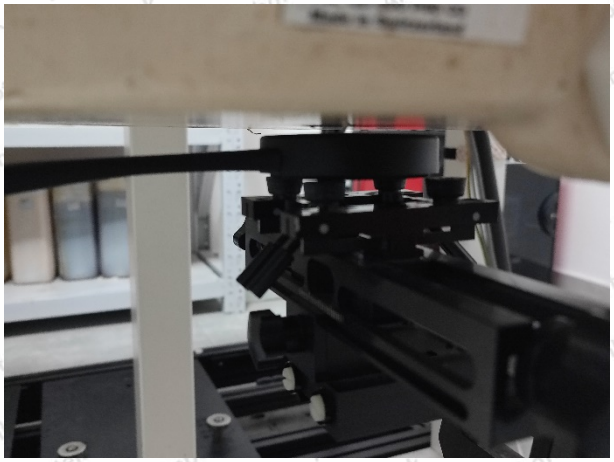	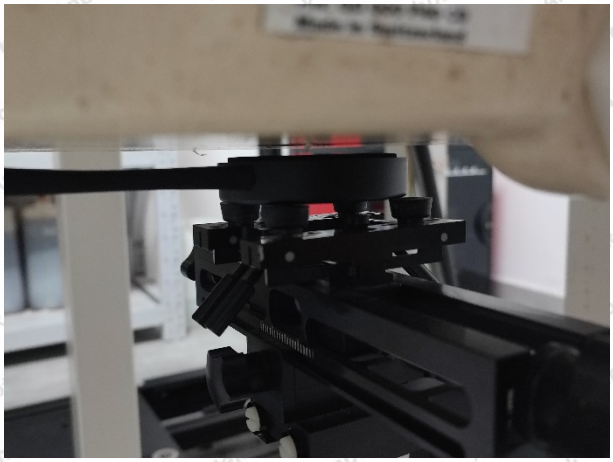
Horizontal-Up(5mm)	Horizontal-Down(5mm)
Vertical-Front(5mm)	Vertical-Back(5mm)
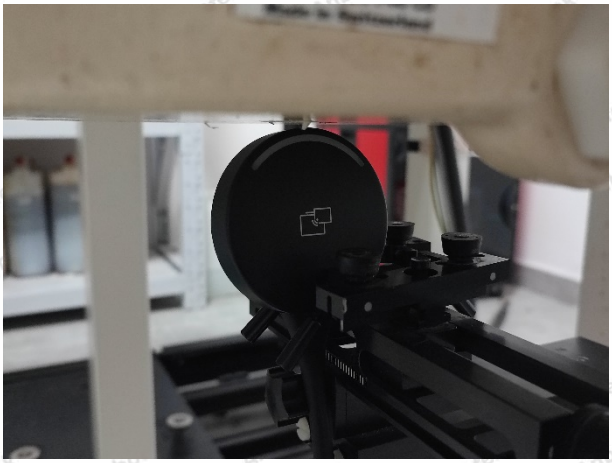	
Top(5mm)	

Appendix B. Plots of SAR System Check

2450MHz Body System Check Date:07/03/2023

Communication System: UID 0, CW; Frequency: 2450 MHz;Duty Cycle: 1:1

Medium parameters used: f = 2450 MHz; σ = 1.88 S/m; ε_r = 52.14; ρ = 1000 kg/m^3

Phantom section: Flat Section

DASY5 Configuration:

- Probe: EX3DV4 – SN7396; ConvF(7.53, 7.53, 7.53); Calibrated: May 06, 2023;
- Sensor-Surface: 2mm (Mechanical Surface Detection)
- Electronics: DAE4 Sn387; Calibrated: Sep. 06, 2022
- Phantom: SAM; Type: QD000P40CD; Serial: TP:1670
- Measurement SW: DASY52, Version 52.8 (2); SEMCAD X Version 14.6.10 (7164)

Configuration/Pin=250mW/Area Scan (81x81x1): Interpolated grid: dx=1.200 mm, dy=1.200 mm

Maximum value of SAR (interpolated) = 20.6 W/kg

Configuration/Pin=250mW/Zoom Scan (7x7x7)/Cube 0: Measurement grid: dx=5mm, dy=5mm, dz=5mm

Reference Value = 89.751 V/m; Power Drift = 0.12 dB

Peak SAR (extrapolated) = 27.1 W/kg

SAR(1 g) = 12.69 W/kg; SAR(10 g) = 5.96W/kg

Maximum value of SAR (measured) = 20.8 W/kg

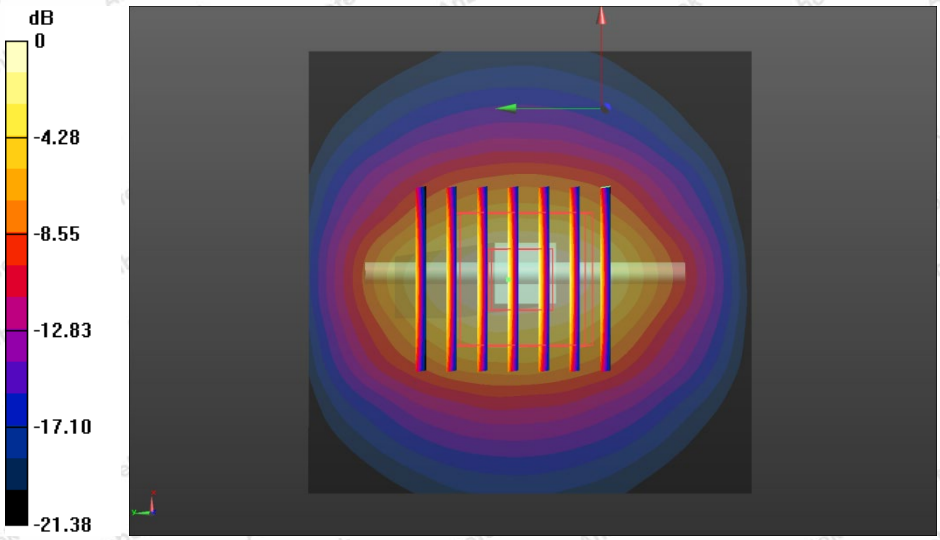

5200MHz Body System Check Date:07/04/2023

DUT: Dipole 5GHz; Type: D5GHzV2; Serial: D5GHzV2 - SN:1160

Communication System: UID 0, CW; Frequency: 5200 MHz; Duty Cycle: 1:1

Medium parameters used: f = 5200 MHz; σ = 5.16 S/m; ε_r = 48.14; ρ = 1000 kg/m^3

Phantom section: Flat Section

DASY5 Configuration:

- Probe: EX3DV4 – SN7396; ConvF(4.93, 4.93, 4.93); Calibrated: May 06, 2023;
- Sensor-Surface: 2mm (Mechanical Surface Detection)
- Electronics: DAE4 Sn387; Calibrated: Sep. 06, 2022
- Phantom: SAM; Type: QD000P40CD; Serial: TP:1670
- Measurement SW: DASY52, Version 52.8 (2); SEMCAD X Version 14.6.10 (7164)

Configuration/Pin=100mW/Area Scan (71x71x1): Interpolated grid: dx=1.000 mm, dy=1.000 mm

Maximum value of SAR (interpolated) = 20.9 W/kg

Configuration/Pin=100mW/Zoom Scan (7x7x7)/Cube 0: Measurement grid: dx=4mm, dy=4mm, dz=1.4mm

Reference Value = 59.857 V/m; Power Drift = 0.04 dB

Peak SAR (extrapolated) = 34.58 W/kg

SAR(1 g) = 7.63 W/kg; SAR(10 g) = 2.21 W/kg

Maximum value of SAR (measured) = 20.8 W/kg

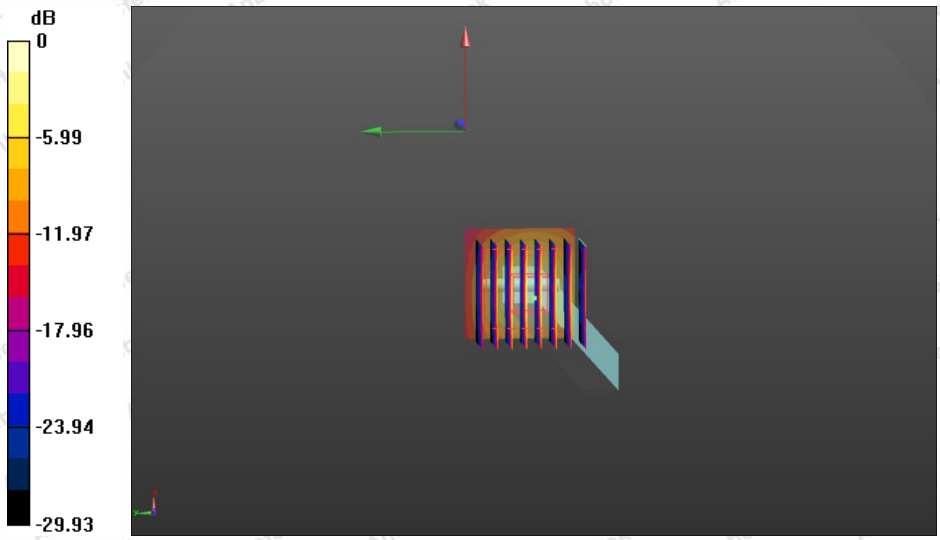

5800MHz Body System Check Date:07/05/2023

DUT: Dipole 5800 MHz; Type: D5GHzV2; Serial: D5GHzV2 - SN:1160

Communication System: UID 0, CW; Frequency: 5800 MHz;Duty Cycle: 1:1

Medium parameters used: f = 5800 MHz; σ = 5.74 S/m; ε_r = 48.54; ρ = 1000 kg/m^3

Phantom section: Flat Section

DASY5 Configuration:

- Probe: EX3DV4 – SN7396; ConvF(4.52, 4.52, 4.52); Calibrated: May 06, 2023;
- Sensor-Surface: 2mm (Mechanical Surface Detection)
- Electronics: DAE4 Sn387; Calibrated: Sep. 06, 2022
- Phantom: SAM; Type: QD000P40CD; Serial: TP:1670
- Measurement SW: DASY52, Version 52.8 (2); SEMCAD X Version 14.6.10 (7164)

Configuration/Pin=100mW/Area Scan (71x71x1): Interpolated grid: dx=1.000 mm, dy=1.000 mm

Maximum value of SAR (interpolated) = 18.8 W/kg

Configuration/Pin=100mW/Zoom Scan (7x7x7)/Cube 0: Measurement grid: dx=4mm, dy=4mm, dz=1.4mm

Reference Value = 56.773 V/m; Power Drift = 0.08 dB

Peak SAR (extrapolated) = 31.5 W/kg

SAR(1 g) = 7.95 W/kg; SAR(10 g) = 2.23 W/kg

Maximum value of SAR (measured) = 19.8 W/kg

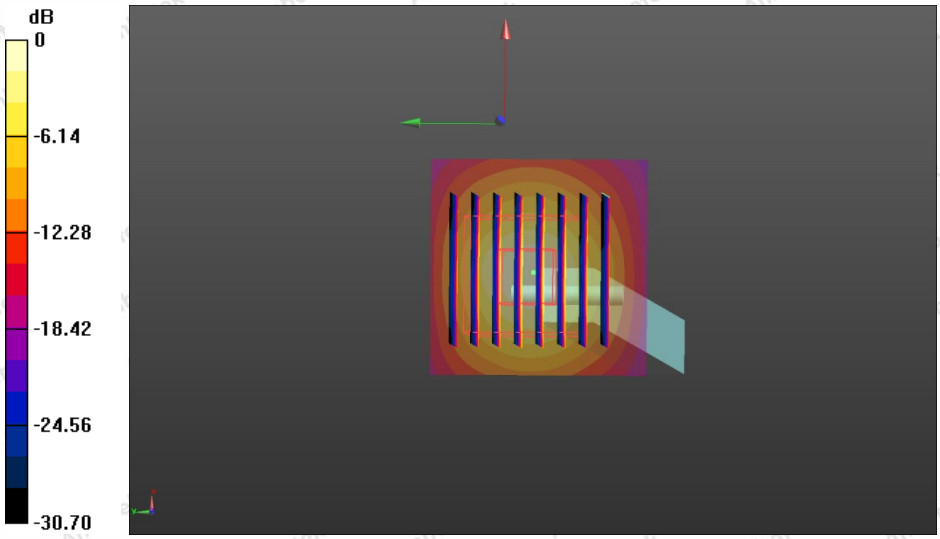

Appendix C. Plots of SAR Test Data

#1 Date: 07/03/2023

2.4G WIFI_802.11b_CH1 BODY LEFT

Communication System: UID 0, wifi (fcc) (0); Frequency: 2412 MHz;Duty Cycle: 1:1
Medium parameters used (interpolated): f = 2412 MHz; σ = 1.88 S/m; ε_r = 52.14; ρ = 1000 kg/m^3
Phantom section: Flat Section

DASY5 Configuration:

- Probe: EX3DV4 - SN7396; ConvF(7.53, 7.53, 7.53); Calibrated: May 06, 2023;
- Sensor-Surface: 1.4mm (Mechanical Surface Detection)
- Electronics: DAE4 Sn387; Calibrated: Sep. 06, 2022
- Phantom: SAM; Type: QD000P40CD; Serial: TP:1670
- Measurement SW: DASY52, Version 52.8 (2); SEMCAD X Version 14.6.10 (7164)

BODY LEFT /Area Scan (31x81x1): Interpolated grid: dx=1.200 mm, dy=1.200 mm
Maximum value of SAR (interpolated) = 1.761 W/kg

BODY LEFT /Zoom Scan (7x7x7)/Cube 0: Measurement grid: dx=5mm, dy=5mm, dz=5mm
Reference Value = 8.364 V/m; Power Drift = -0.10 dB
Peak SAR (extrapolated) = 1.782 W/kg
SAR(1 g) = 0.653 W/kg; SAR(10 g) = 0.297 W/kg
Maximum value of SAR (measured) = 1.563 W/kg

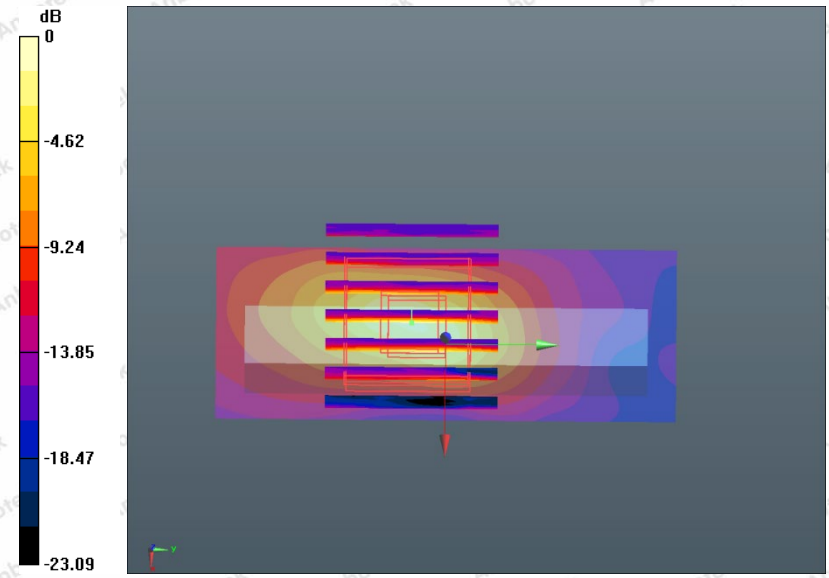

2.4G WIFI_802.11g_CH1 BODY RIGHT

Communication System: UID 0, wifi (fcc) (0); Frequency: 2412 MHz;Duty Cycle: 1:1
Medium parameters used (interpolated): f = 2412 MHz; σ = 1.88 S/m; ε_r = 52.14; ρ = 1000 kg/m^3
Phantom section: Flat Section

DASY5 Configuration:

- Probe: EX3DV4 - SN7396; ConvF(7.53, 7.53, 7.53); Calibrated: May 06, 2023;
- Sensor-Surface: 1.4mm (Mechanical Surface Detection)
- Electronics: DAE4 Sn387; Calibrated: Sep. 06, 2022;
- Phantom: SAM; Type: QD000P40CD; Serial: TP:1670
- Measurement SW: DASY52, Version 52.8 (2); SEMCAD X Version 14.6.10 (7164)

BODY RIGHT /Area Scan (31x81x1): Interpolated grid: dx=1.200 mm, dy=1.200 mm
Maximum value of SAR (interpolated) = 1.502 W/kg

BODY RIGHT /Zoom Scan (7x7x7)/Cube 0: Measurement grid: dx=5mm, dy=5mm, dz=5mm
Reference Value = 7.169 V/m; Power Drift = 0.15 dB
Peak SAR (extrapolated) = 1.546 W/kg
SAR(1 g) = 0.513 W/kg; SAR(10 g) = 0.245 W/kg
Maximum value of SAR (measured) = 1.243 W/kg

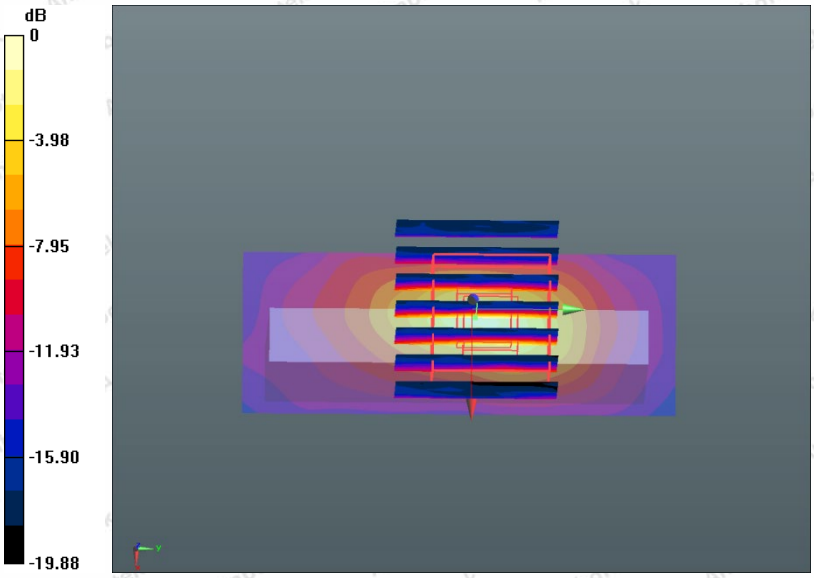

WIFI 5.2G_802.11AC(HT40)_CH38 BODY LEFT

Communication System: UID 0, wifi (fcc) (0); Frequency: 5190 MHz;Duty Cycle: 1:1
Medium parameters used (interpolated): f = 5190 MHz; σ = 5.16 S/m; ε_r = 48.14; ρ = 1000 kg/m^3
Phantom section: Flat Section

DASY5 Configuration:

- Probe: EX3DV4 - SN7396; ConvF(4.93, 4.93, 4.93); Calibrated: May 06, 2023;
- Sensor-Surface: 1.4mm (Mechanical Surface Detection)
- Electronics: DAE4 Sn387; Calibrated: Sep. 06, 2022;
- Phantom: SAM; Type: QD000P40CD; Serial: TP:1670
- Measurement SW: DASY52, Version 52.8 (2); SEMCAD X Version 14.6.10 (7164)

BODY LEFT /Area Scan (31x81x1): Measurement grid: dx=1.000mm, dy=1.000mm
Maximum value of SAR (interpolated) = 1.825 W/kg

BODY LEFT /Zoom Scan (8x8x8)/Cube 0: Measurement grid: dx=4mm, dy=4mm, dz=4mm
Reference Value = 7.743 V/m; Power Drift = -0.05 dB
Peak SAR (extrapolated) = 1.891 W/kg
SAR(1 g) = 0.628 W/kg; SAR(10 g) = 0.303 W/kg
Maximum value of SAR (measured) = 1.782 W/kg

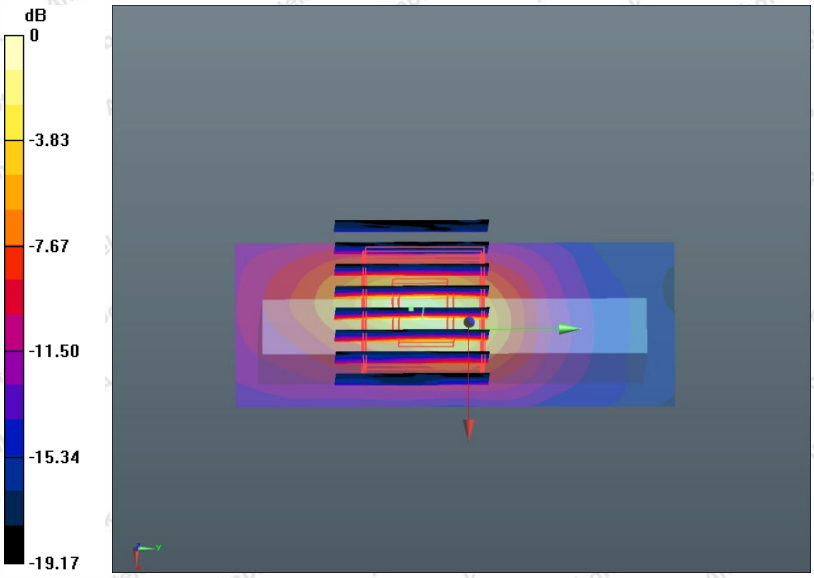

WIFI 5.2G_802.11AC(HT40)_CH38 BODY RIGHT

Communication System: UID 0, wifi (fcc) (0); Frequency: 5190 MHz;Duty Cycle: 1:1
Medium parameters used (interpolated): f = 5190 MHz; σ = 5.16 S/m; ε_r = 48.14; ρ = 1000 kg/m^3
Phantom section: Flat Section

DASY5 Configuration:

- Probe: EX3DV4 - SN7396; ConvF(4.93, 4.93, 4.93); Calibrated: May 06, 2023;
- Sensor-Surface: 1.4mm (Mechanical Surface Detection)
- Electronics: DAE4 Sn387; Calibrated: Sep. 06, 2022
- Phantom: SAM; Type: QD000P40CD; Serial: TP:1670
- Measurement SW: DASY52, Version 52.8 (2); SEMCAD X Version 14.6.10 (7164)

BODY RIGHT /Area Scan (31x81x1): Measurement grid: dx=1.000mm, dy=1.000mm
Maximum value of SAR (interpolated) = 1.472 W/kg
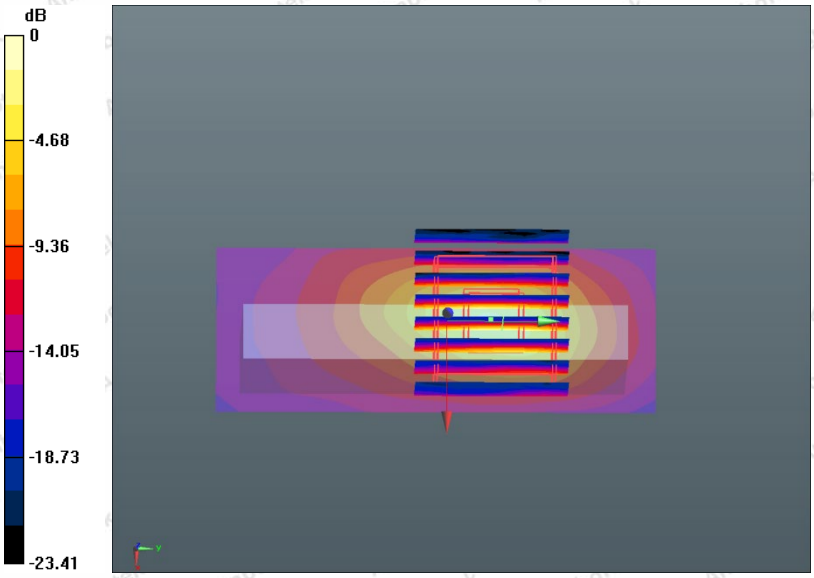
BODY RIGHT /Zoom Scan (8x8x8)/Cube 0: Measurement grid: dx=4mm, dy=4mm, dz=4mm
Reference Value = 6.851 V/m; Power Drift = 0.15 dB
Peak SAR (extrapolated) = 1.553 W/kg
SAR(1 g) = 0.688 W/kg; SAR(10 g) = 0.331 W/kg
Maximum value of SAR (measured) = 1.244 W/kg