SOAPY

Hygiene is in your hands

User manual

ECO – A Smart Hygiene Micro-System

Model Number: ECO-02

COPYRIGHTS
Copyright © 2020 by Soapy Care All rights reserved.
This documentation contains proprietary information of Soapy This information is supplied solely to assist Soapy - authorized personnel and customers of Soapy ECO-02. No part of this document may be used for other purposes, and it may not be disclosed to other parties.
The specifications on which this document is based are subject to change without notice.
No part of this book may be reproduced in any form or by any means, nor stored in a database or retrieval system, without prior permission in writing from Soapy

Doc Revision	Written by	Approved by	Date
Rev - A	Marat Altynbaev		
Rev - B	Zvika Kopelovitch		

Please read this user manual first!

Dear Customer,

Thank you for choosing Soapy. We want you to get the most out of your product, therefore, please read this entire user manual and all other accompanying documents carefully before using the product and keep it as a reference for future use. Follow all warnings and information in the user manual.

Explanation of symbols

Throughout this user manual the following symbols are used:

- Important information or useful hints about usage.

- A Warning for hazardous situations with regard to life and property.

- Warning for electric shock.

- Packaging materials of the product are manufactured from recyclable materials in accordance with our National Environment Regulations.

Do not dispose of the packaging materials together with the domestic or other wastes. Take them to the packaging material collection points designated by the local authorities.

Table of contents

1 Safety 5
- 1.1 General safety 5
- 1.3 Intended use 6
- 1.4 Foreseeable misuse 6

2 Package information 6

3 Environment 7
- 3.1 Disposing of the waste product 7
- 3.2 Compliance with the WEEE Directive 7
- 3.3 Compliance with RoHS Directive 7

4 Your ECO-02 device 9
- 4.1 Overview 9
- 4.2 Package Contents 11
  - 4.2.1 System 11
  - 4.2.2 Accessory kit 12
- 4.3 Technical specifications 13

5 Installation 14
- 5.1 Package opening 15
- 5.2 Location of installation 15
- 5.3 Mounting 16
- 5.3.1 Wall types 16
- 5.3.2 Mounting process 16
- 5.4 Connecting to the drain 16
- 5.5 Connecting water supply 18
- 5.6 Soap installation 20
- 5.7 Electrical connection 20
- 5.8 Internet connection 22
- 5.9 Getting started with Soapywisdom platform 24

6 Operating the product 25
- 6.1 Hand Washing Procedure 26

7 Maintenance and cleaning 27
- 7.1 Cleaning the ECO-02 27
- 7.2 Cleaning a sink strainer 29
- 7.3 Cleaning the water intake filter 30

8 Led panel statuses 31
- 8.1 Led statuses 31

9 Troubleshooting 32
- 9.1 ECO-02 device doesn’t function (LED panel is off) 32

9.2 ECO-02 device doesn't provide water 32
9.3 There is water leaking from the ECO-02 device 32
9.4 Water in the sink does not drain properly 33
9.5 ECO-02 device does not provide soap 33
10 Changing the location or replacing the ECO-02 33
10.1 Changing the location of the ECO-02 33
10.2 Replacing of the product 33
Appendix A 35
Appendix B 35
Appendix C - MSDS of the soap 35

1 Safety

This section contains safety instructions that will help protect from the risk of personal injury or property damage. Failure to follow these instructions shall void any warranty.

1.1 General safety

• This product can be used by children above 3 years old and by persons whose physical, sensory or mental capabilities were not fully developed or who lack experience and knowledge provided that they are supervised or trained on the safe usage of the product and the risks it poses. Children must not play with the product. Cleaning and maintenance works should not be performed by children.

If the product has a failure, it should not be operated unless it is repaired by an Authorized Service Agent. There is a risk of electric shock!

• This product is designed to resume operating in the event of powering on after a power interruption.

• Connect the product only to a grounded power socket. Verify that the grounding was made according to the site preparation document. Our company shall not be liable for any damages that will arise when the product is used without grounding in accordance with the local regulations.

• The water supply and draining hoses must be securely fastened and remain undamaged. Otherwise, there is a risk of water leakage.

• Never touch the plug with wet hands! Never unplug by pulling on the cable, always pull out by grabbing the plug.

• The product must be unplugged during installation, maintenance, and repair procedures.

Do not open the back cover of the product. Only Authorized Service Agent may open the ECO-02. There is a risk of electric shock!

Wash the product only in accordance with the cleaning procedures (See the "Cleaning ECO-02" paragraph) There is a risk of electric shock!

• Always have the installation and repairing procedures carried out by the Authorized Service Agent. The manufacturer shall not be held liable for damages that may arise from procedures carried out by unauthorized persons.

• If the power cord is damaged, it must be replaced, with a power cord approved by the manufacturer. It should be done by an authorized service agent or similarly qualified persons in order to avoid a hazard.

• Place the product on a special mounting if needed or countertop.

• Do not place the product on the power cable.

• Never drink water from the Smart hygiene micro-system. It may contain traces of soap or sanitizer.

• Packaging materials are dangerous to children. Keep packaging materials in a safe place away from the reach of children.

• Manufacturer shall not be held liable for damages that may arise from inappropriate use of the equipment.

1.3 Intended use

• This product has been designed for commercial use.

• The product must only be used for handwashing.

• The manufacturer waives any responsibility arising from incorrect usage or transportation.

1.4 Foreseeable misuse

• Do not wash other body parts or objects in the Smart hygiene micro-system. The product is designed only for hand washing.

• Do not refill soap cartridges with other soaps that not advised by the manufacturer. It may cause a malfunction of the product.

2 Package information

• Packaging materials of the product are manufactured from recyclable materials in accordance with our National Environment Regulations.

3 Environment

3.1 Disposing of the waste product

• This product has been manufactured with high-quality parts and materials which can be reused and are suitable for recycling. Therefore, do not dispose this product with normal domestic waste at the end of its service life. Take it to a collection point for the recycling of electrical and electronic equipment. Please consult your local authorities to learn the nearest collection point. Help protect the environment and natural resources by recycling used products. For children's safety, cut the power cable so that it will be non-functional before disposing of the product.

3.2 Compliance with the EU - WEEE Directive

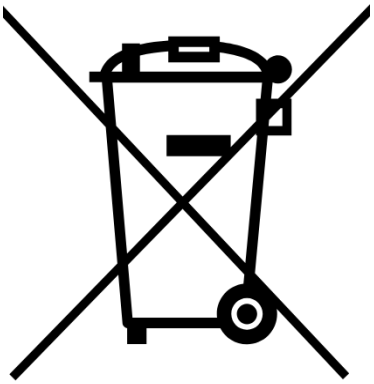

This product complies with EU WEEE Directive (2012/19/EU). This product bears a classification symbol for waste electrical and electronic equipment (WEEE). This product has been manufactured with high-quality parts and materials which can be reused and are suitable for recycling. Do not dispose of the waste product with normal domestic and other wastes at the end of its service life. Take it to the collection center for the recycling of electrical and electronic equipment. Please consult your local authorities to learn about these collection centers.

3.3 Compliance with RoHS Directive

The product you have purchased complies with the EU RoHS Directive (2011/65/ EU). It does not contain harmful and prohibited materials specified in the Directive.

3.4 FCC certification

FCC ID: 2AWJO-ECO02
FCC **Caution:**

Any changes or modifications not expressly approved by the party responsible for compliance could void the user's authority to operate this equipment.

This device complies with part 15 of the FCC Rules. Operation is subject to the following two conditions: (1) this device may not cause harmful interference, and (2) this device must accept any interference received, including interference that may cause undesired operation.
This device and its antenna(s) must not be co-located or operating in conjunction with any other antenna or transmitter.

NOTE: This equipment has been tested and found to comply with the limits for a Class B digital device, pursuant to Part 15 of the FCC Rules. These limits are designed to provide reasonable protection against harmful interference in a residential installation. This equipment generates, uses and can radiate radio frequency energy and, if not installed and used in accordance with the instructions, may cause harmful interference to radio communications. However, there is no guarantee that interference will not occur in a particular installation.
If this equipment does cause harmful interference to radio or television reception,
which can be determined by turning the equipment off and on, the user is encouraged to try to correct the interference by one or more of the following measures:
-- Reorient or relocate the receiving antenna.
-- Increase the separation between the equipment and receiver.
-- Connect the equipment into an outlet on a circuit different
from that to which the receiver is connected.
-- Consult the dealer or an experienced radio/TV technician for help.
To maintain compliance with FCC's RF Exposure guidelines, This equipment should be installed and operated with minimum distance between 20cm the radiator your body: Use only the supplied antenna.

EN
This device contains licence-exempt transmitter(s)/receiver(s) that comply with Innovation, Science and Economic Development Canada's licence-exempt RSS(s). Operation is subject to the following two conditions:
This device may not cause interference.
This device must accept any interference, including interference that may cause undesired operation of the device.
FR
L'émetteur/récepteur exempt de licence contenu dans le présent appareil est conforme aux CNR d'Innovation, Sciences et Développement économique Canada applicables aux appareils radio exempts de licence.
L'exploitation est autorisée aux deux conditions suivantes :
L'appareil ne doit pas produire de brouillage;
L'appareil doit accepter tout brouillage radioélectrique subi, même si le brouillage est susceptible d'en compromettre le fonctionnement.

4 Your ECO-02 device

4.1 Overview

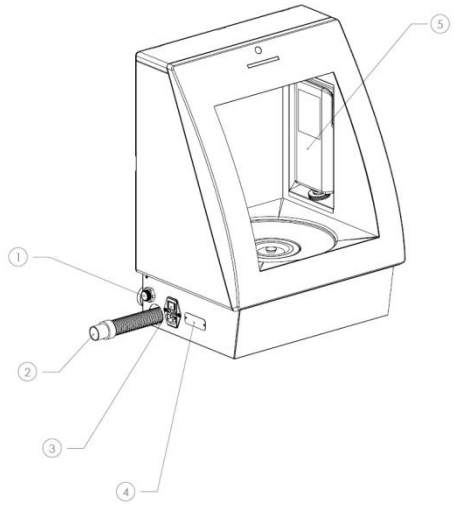	
1. Plastic plug for water inlet 2. Drainage hose 3. ON/OFF switch and power inlet 4. Product nameplate 5. Bottle with the soap	6. Camera 7. LED panel 8. Ultrasonic sensor 9. Sink
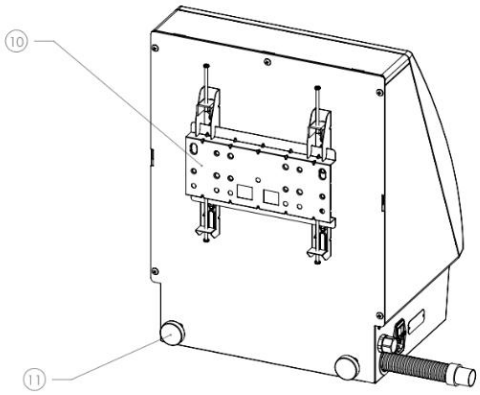	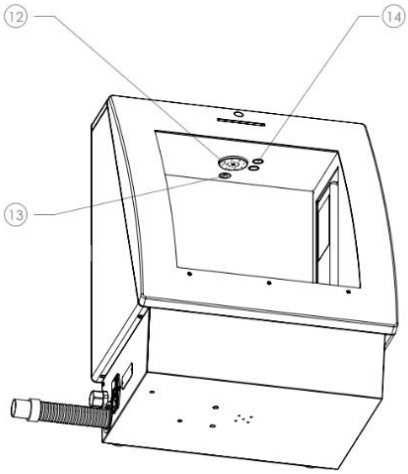
10. Mounting bracket 11. Horizontal position adjusters	12. Sprinkler combined with soap dispenser 13. LED lamp 14. Ultrasonic sensor

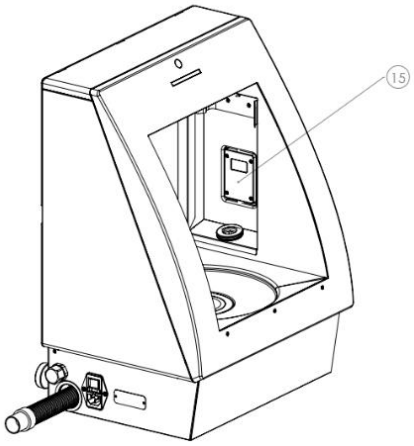	
15. RFid reader	

Figures in this manual are schematic and may not match the product exactly.

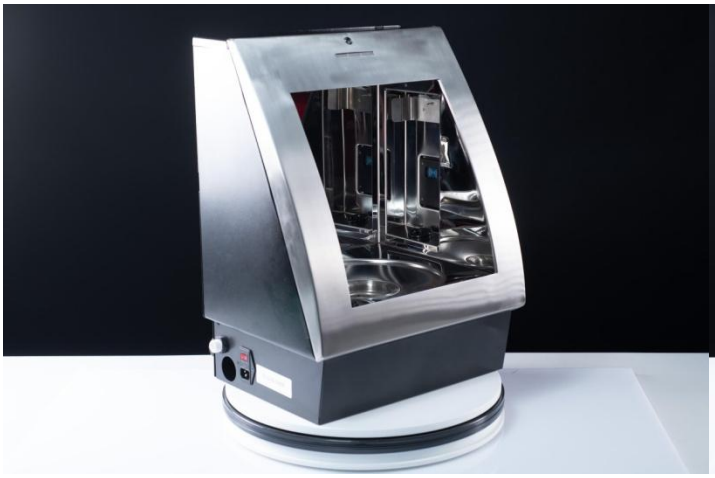

4.2 Package Contents

4.2.1 System

1✖ECO-02 Device	1✖Sink strainer 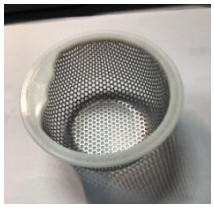
1✖Sink cover	1✖Plastic plug for a water inlet

4.2.2 Accessory kit

On-boarding Leaflet	1✖Water hose with filter
1✖Power cable*	1✖Wall mounting bracket 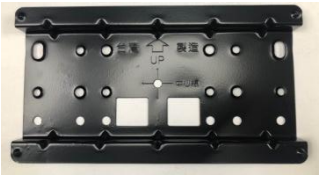
1✖Screws pack	1✖Silicone brush for cleaning

*Power cable type may very from country voltage

4.3 Technical specifications

Dimensions and Weight	
Height	55 cm | 22 in
Width	42 cm | 16.5 in
Length (Depth)	34 cm | 13.4 in
Weight	14 kg | 31 lb

Water	
Water mains pressure*	0.3-3.9 bar | 4.26-56.6 psi
Operational water pressure supply	1.5-2.45 bar | 21-35 psi
Tap water supply connector	½″ female

Electrical	
Heater	Yes
Input voltage	110-120 Volts AC, 50/60 Hz 220-240 Volts AC, 50/60 Hz
Total Max current	8.27 Amp (110 Volts) 6.27 Amp (220 Volts)
Max power	910 Watt (110 Volts) 1380 Watt (220 Volts)
Idle power	6.5 Watt
Circuit breaker	10 A

Environment	
Operating temperature	5°C to +40°C | 41° to 104°F
Humidity	50-95 RH

Values stated on the product labels or in the documentation accompanying it are obtained in laboratory conditions in accordance with the relevant standards. Depending on the operational and environmental conditions of the product, these values may vary.

5 Installation

Refer to the Authorized Service Agent for the installation of the product. To make the product ready for use, review the information in the user manual, and make sure that the electricity, tap water supply and water drainage systems are appropriate before calling the Authorized Service Agent (See "Site preparation" document). If they are not, call a qualified technician and plumber to have any necessary arrangements carried out.

Preparation of the location and also electrical, tap water, Wi-Fi network, and wastewater installations at the place of installation are under customer's responsibility.

Installation and electrical connections of the product must be carried out by the Authorized Service Agent. The manufacturer shall not be held liable for damages that may arise from procedures carried out by unauthorized persons.

Prior to installation, visually check if the product has any defects on it. If so, do not have it installed. Damaged products cause risks for your safety.

Make sure that the water inlet and discharge hoses as well as the power cable are not folded, pinched or crushed after installation or cleaning procedures.

Some water might have remained in the product due to the quality control processes in the production.

5.1 Package opening

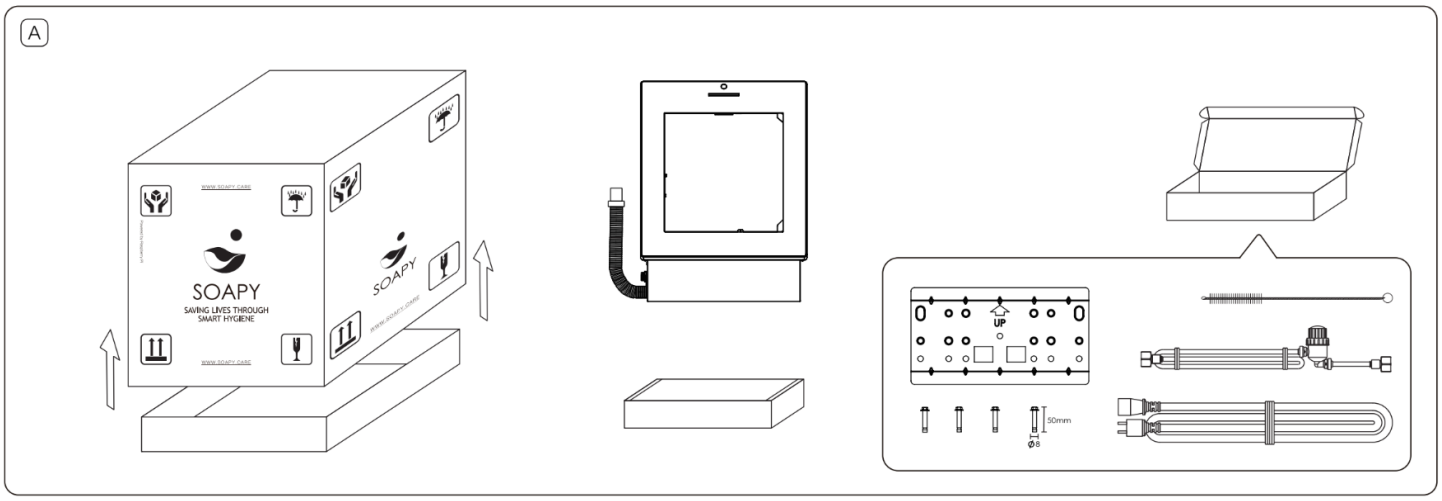

Scheme A: Package opening

1) Open the cardboard box by using scissors or an office knife. Cut off the plastic bag and yellow stripes. Take the cover cardboard part off the ECO-02 device by pulling the upper side up.
2) Make sure the accessory kit is present in the packaging and contains all the accessories listed. (See "Accessory Kit", par. 2.2.2).
2) Take the protective plastic bag off the ECO-02 device and prepare the place of the installation by reading the next paragraph.

5.2 Location of installation

• ECO-02 devices must be placed on a wall with provided mounting bracket or countertop.

• Total weight of the device without packaging approx. 16 kg.

• Do not operate the system at places where the temperature may fall below 5ºC and raise the temperature of 50ºC.

5.3 Mounting

5.3.1 Wall types

When installing the system on a wall, Verify the type of wall.
Concrete or stonewall, the installer can use the provided wall plugs for installation of the bracket.
If the wall is drywall, the installer must use wall plugs that will hold more than 16 Kg.

5.3.2 Mounting process

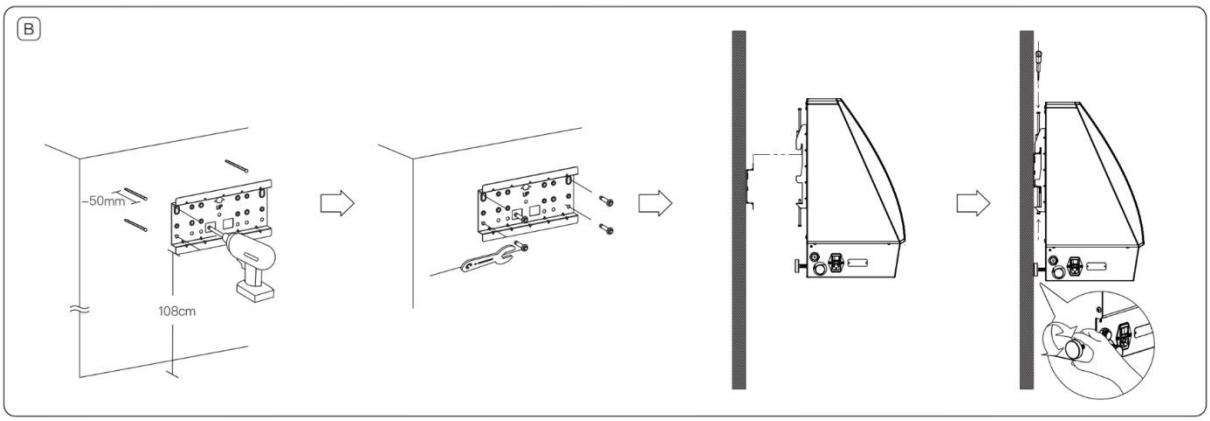

Scheme B: Mounting process

1) Use the leveler to verify the horizontal position of the wall mounting bracket. (See B1 for the)
We suggest using a template for marking holes. The template will help to assure that the height of the unit is appropriate. (See "Appendix A")
2) Drill four holes at the appropriate height. The recommended height of the mounting bottom side is 108 cm from the floor. Different heights can be used per customer needs. (See B1 for the)
3) Place the wall mounting bracket on the wall and insert the four wall plugs with screws into the wall. (See B1 for the)
4) Use the open key (size x) to screw the four screws into the wall plugs. (See B1 for the)
5) Place the system on a wall and screw four vertically aligned long screws that are located on the system with the use of a long screwdriver. Tighten the system to the wall mounting bracket by screwing the screws. (See B1 for the)
8) Unscrew the horizontal position adjusters out until the ECO-02 unit will be in a horizontal position. (See B1 for the)

5.4 Connecting to the drain

Optimal local drain location is on the left side of the system
The height of the local drain should be less than 60 cm to enable system hose attached to the local drain
The distance of the local drain should be less than 100 cm from the ECO-02
The drainpipe edge diameter is ¾″ ~19mm
To avoid water leak failures, the connection between the extension hose and the drain hose of the product must be fitted well, as not to come off and leak.

Place of installation will be flooded if the hose comes out of its housing during water discharge. To prevent such situations and to ensure smooth waterdischarge of the ECO-02 device, fix the end of the discharge hose tightly so that it cannot come out.

• The end of the hose should not be bent, it should not be stepped on and the hose must not be pinched between the drain and the ECO-02 device.

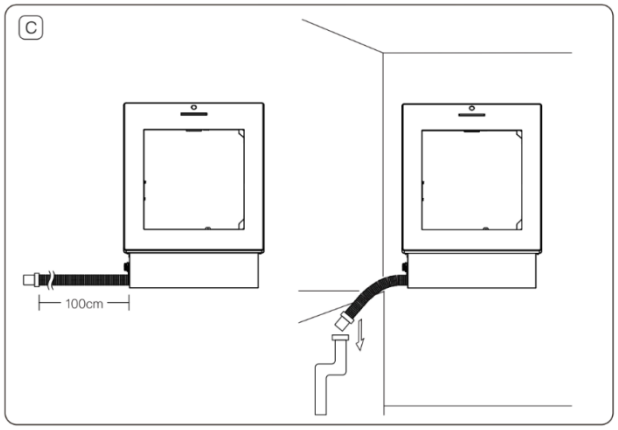

Scheme C: Drain connection

1) Connect the end of the drain hose directly to the wastewater drain of the facility.
2) Make sure that the connection is tight and that the drainage hose of the unit can't come out of the facility's drain.

5.5 Connecting water supply

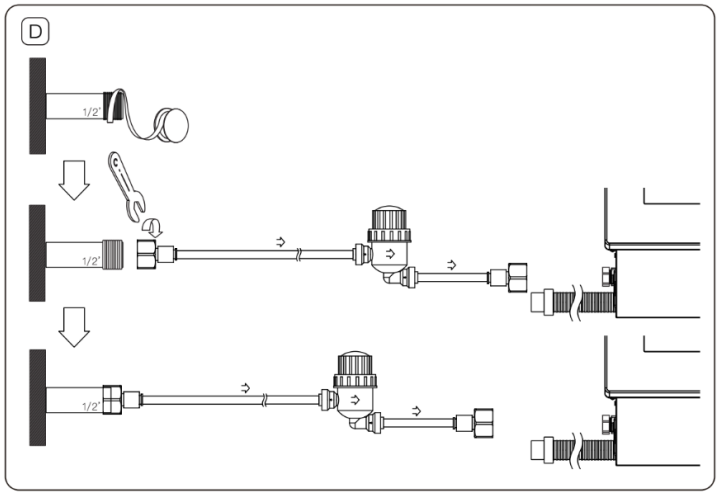

Scheme D: Connecting the water supply hose to the facility

1) Make sure that the facility has a ½" inch female connector of the tap water supply.

2) Locate the water hose that can be found at the accessory kit.

3) Put the teflon tape on the pipe thread of the facility.

4) Connect the long side of the water hose to the water supply of the facility. (Check mark on the filter for the correct water direction).

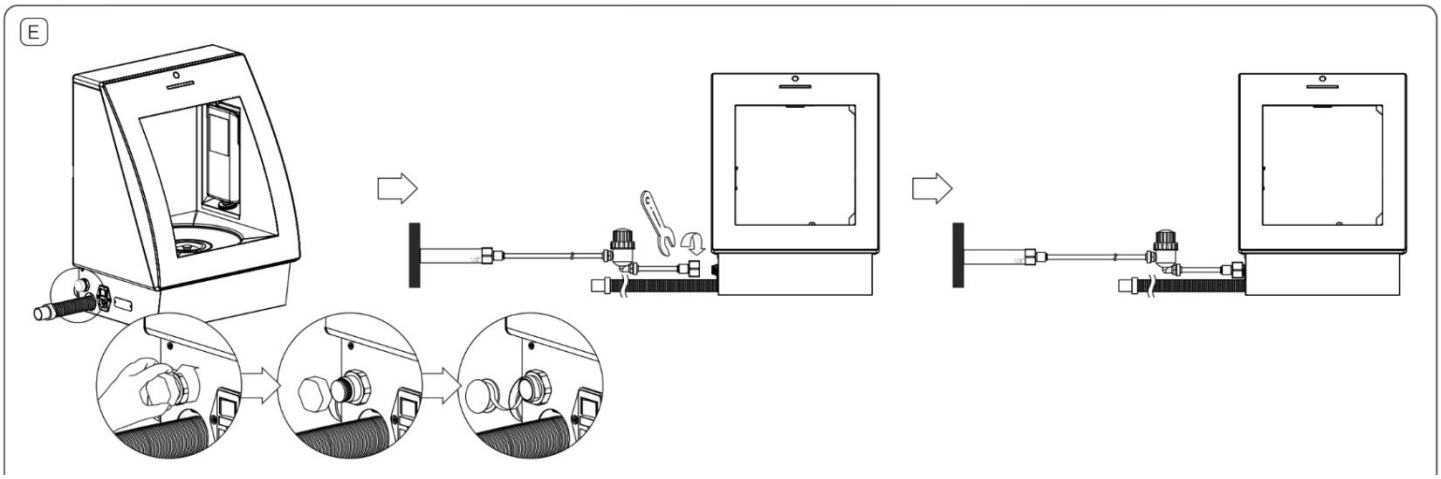

Scheme E: Connecting the water supply hose to the ECO-02

5) Unscrew the plastic plug from the unit water inlet.

6) Put a teflon tape on the pipe thread of the unit.

7) Connect the second side of the water hose, the shorter one, to the water inlet on the product.

8) Tighten hose nuts by hand. In case of water leakage, use an open key and gently tighten the nuts.

9) Fully open the tap after making the hose connection to check for water leaks at the connection points. If any leaks occur, turn off the tap and remove the nut. Put a teflon tape on the leaking pipe thread, retighten the nut carefully after checking the seal. To prevent water leakages and damages caused by them, keep the taps closed when the ECO-02 device is not in use.

The water supply pressure must not exceed 3.9 bars (56.6 psi). Attach a pressure reducing valve if water pressure is higher.

The water supply pressure required to properly run the product is between 1.5-2.45 bar (21-35 psi).

Ensure that the cold water connection is made correctly when installing the product. Do not connect the hot water to the unit water inlet.

5.6 Soap installation

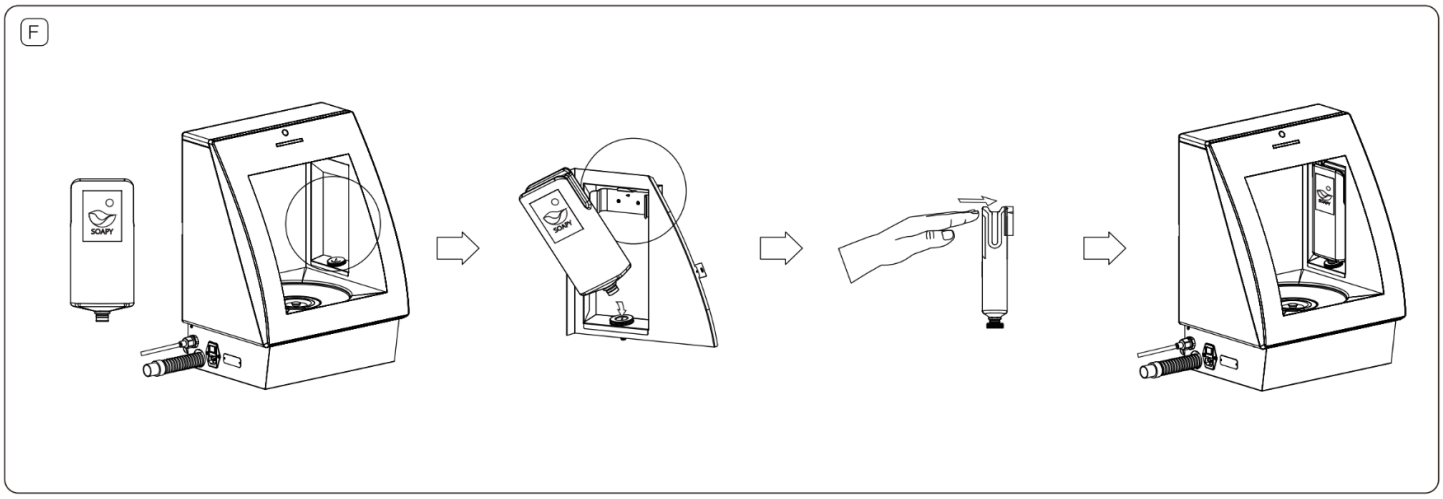

Scheme F: Soap installation

1) Adjust a soap bottle on the right side of the device by turning the bottle upside down with an RFID sticker (small rounded sticker) towards the RFID reader.
2) Push the bottle down towards the soap needle. The needle should go through the silicone plug to let the soap flow.
3) Perform a penetration of the soap bottle by the upper needle.
4) Assure to fix the soap bottle with special metal fitting (above the bottom of the bottle).
5) Assure there is no leakage of soap near a needle.

Using soap provided by Soapy will assure the correct working of the ECO device.

5.7 Electrical connection

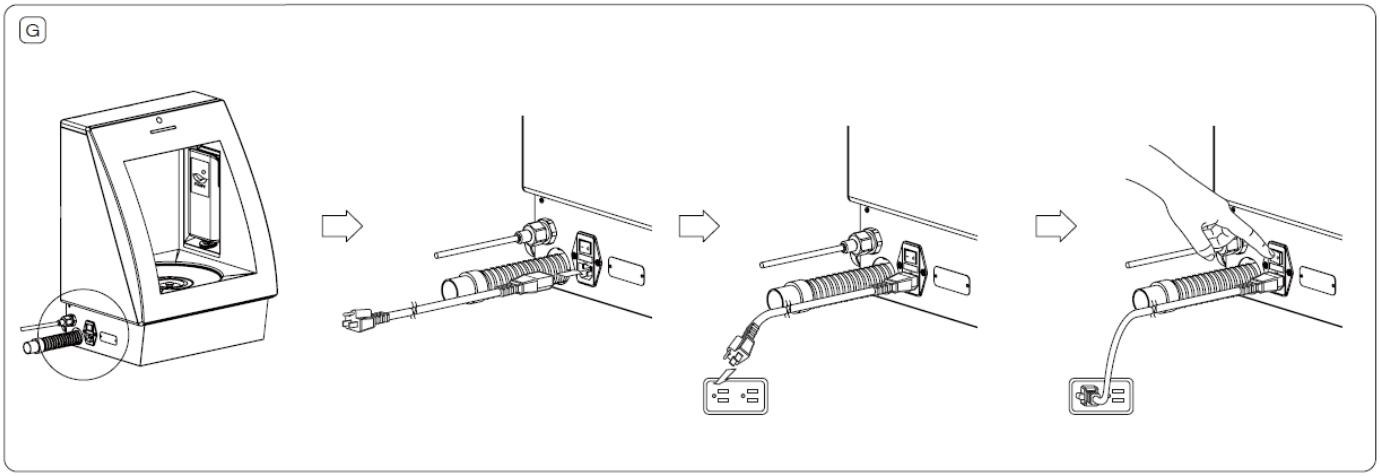

Scheme G: Electrical connection

1) Connect the product to a grounded outlet protected by a fuse defined by regulatory rules.

Our company shall not be liable for any damages that will arise when the product is used without grounding in accordance with the local regulations.

2) Connect the device to a proper outlet and turn the power button ON (-).

Image 1: Power button ON (-)

- Connection must comply with local country regulations.
- Power cable plug must be within easy reach after installation.
- The voltage specified in the "Technical specifications" section must be equal to your mains voltage.
- Do not make connections via extension cables or multi-plugs.

The ECO device must be grounded – if the appliance is improperly grounded, the result could be electric shock. Please ensure that the ECO device is set up, so access to the power outlet and plug is unobstructed.

To provide additional protection from the risk of shock, the ECO-02 device MUST be connected to a ground fault circuit interrupter (GFCI) outlet at all times.

Damaged power cables must be replaced by the Authorized Service Agents.

5.8 Internet connection

Connect your ECO-02 device to the Wi-Fi network using a configuration app that can be downloaded from the google/apple store.

1) Open your app store and look for nymea app: Apple store or Google play.
2) Download the app on your phone.
3) Verify your Bluetooth is on.
4) Open nymea app and follow the instructions in the next table (ECO-02 is switched ON):

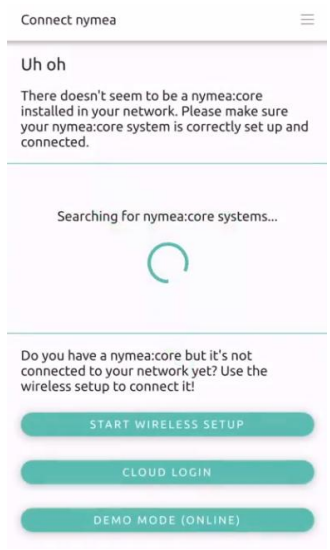	In the view, select the "start wireless setup".
	Select the "BT WLAN setup"; it is the ECO-02 Bluetooth signature. If you can't find the "BT WLAN setup", restart your ECO-02 unit by turning it OFF(0) and then ON(-). If restarting the ECO-02 unit didn't help, try to close nymea app on your phone, wait for 15 seconds and open it again to locate the "BT WLAN setup". If all the above didn't help, contact Soapy service department by support@soapy.care

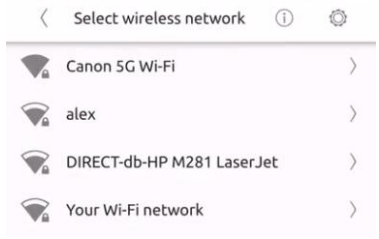	Select your Wi-Fi network from the list.
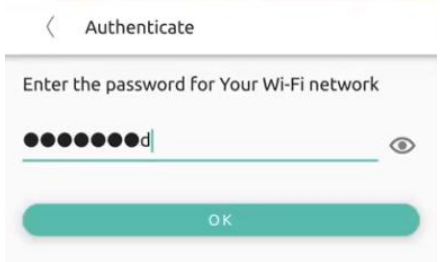	Enter the password of your Wi-Fi network.
	When receiving the V mark, the software installation is done. The unit is connected to the internet and you can start your first hand-washing experience guided by paragraph Operating the product.

A stable internet connection makes it possible to have an updated version of the software running on the device. Internet connection helps us to monitor the right functioning of your device and provides you reports regarding hand hygiene at your facility.

5.9 Getting started with Soapywisdom platform

With a subscription purchase, you will receive the automatic email with your credentials to perform a first log-in to your smart hygiene reports on www.soapywisdom.com.
Typewww.soapywisdom.com/login and use your email and provided password for the first log-in.

If you can't locate an email with the credentials, click on "Forgot password"

If you have never received an email with credentials, contact Soapy support team at support@soapy.care

6 Operating the product

Before starting to use the product, make sure that all preparations are completed in accordance with the instructions in sections "**Important safety and environment instructions**" and "**Installation**".

The stable green light on the LED panel indicates that the ECO-02 device is ready for operation.

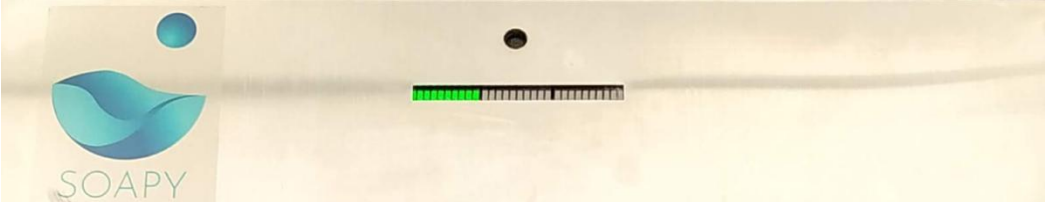

Image 2: LED panel

If the green light doesn’t appear on the LED panel, please refer to the troubleshooting section.

6.1 Hand Washing Procedure

6.1.1. Approach the ECO-02 system and place your hands inside the device, just in the center.

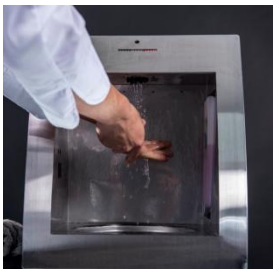

6.1.2. Soap and water for lathering will be provided automatically.

The LED panel light will change to red:

6.1.3. Lather hands for a predefined time length. The recommended time for lathering is 20 seconds*.
*It is possible to change the lathering time by contact Soapy Care Ltd. support@soapy.care.

The LED panel lights will turn to red and blinking yellow:

6.1.4. Rinse your hands - at this step water will be provided to wash out the soap from your hands.

The LED panel lights will turn to red, yellow and blinking green:

6.1.5. The user finishes the hand-washing sequence - at this step, you should shake your hands a few times to remove water drops.

The LED panel lights are stable red, yellow and green:

7 Maintenance and cleaning

Keeping your ECO-02 device properly maintained and cleaned will provide a better experience with a product. Keeping the system cleaned at regular intervals will reduce problems.

7.1 Cleaning the ECO-02

The ECO-02 device should be cleaned regularly on a daily basis.

Use the soft cleaning rag made from soft fabric or paper towel.

Never use a sponge, scrub materials, or active chemical reagents (Oxides, acetone, etc.). These will damage the painted and plastic surfaces.

Please pay attention to the sensors located on the left inner wall and near the upper tap and do not apply force during their cleaning. Clean the sensor cover with a special silicone tool.

Daily cleaning Procedure:

1) Place a small amount of the cleaning agent (70% alcohol-based liquid for cleaning) on a rag and clean the inner space of the device and the external panel.

Image 3: Cleaning the inner space

2) Wipe out the cleaning agent with a dry rag or paper towel.
3) Verify that the soap dispense hole at the sprinkler is open. If it is not, use a silicone tool for cleaning.

Image 4: Cleaning the sprinkler soap hole

Image 5: Cleaning the side sensors

Do not clean the sensors with the cleaning agent or direct water current.

It is recommended to dry all surfaces with clean tissue paper or similar to prevent the formation of a favorable bacterial environment.

7.2 Cleaning a sink strainer

The sink strainer should be cleaned on a daily basis or if necessary in case of extreme dirt.

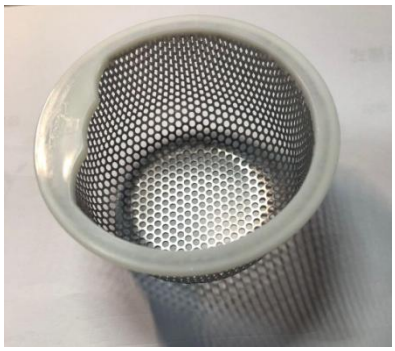

Image 6: Sink strainer

Wear gloves or use an appropriate brush to avoid touching the residues in the sink strainer with your skin when cleaning.

After cleaning, return the sink strainer back to its seating and push its downwards to make sure it is in the right position.

Image 7: Return the sink strainer back to its seating

7.3 Cleaning the water intake filter

Clean the water intake filter at regular intervals (every 5000 washing cycles or every 3 months, the closest date between two) as shown below in order to prevent the accumulation of residues.

1. Close water inlet.
2. Turn off the power supply for the ECO-02 device.
3. Open a filter and clean the inner side of it.
4. Close the filter tightly.
5. Open tap water supply.
6. Turn on the power supply for the ECO-02 device.

Image 8: Water filter

8 Led panel statuses

8.1 Led statuses

In case of faults or alerts, ECO-02 will provide an explanation of the problem by showing the combination of lights that will appear on the LED panel. The indication will appear for the first 10 seconds after turning ON switch, and every 10 minutes after that (for 10 seconds).

See the table below:

Problem	**Light/lights involved**	**Times**	**Pictures**
System power Up	No lights involved	~30 seconds	
No wi-fi connection	Green light blinks	2 blinks in 1 second	
Bad input from the left sensor	Red light blinks	2 blinks in 1 second	
Bad input from the top sensor	Yellow light blinks	2 blinks in 1 second	
No bottle ID recognition	Yellow light blinks + Red light	Yellow: 2 blinks in 1 second Red: constant for 1 second	
Camera malfunction (no voltage)	Red and Green lights blink	Green and red: 2 blinks in 1 second	

9 Troubleshooting

9.1 ECO-02 device doesn’t function (LED panel is off)

- ECO-02 device might have stopped temporarily due to no voltage. >>>Make sure that the source power socket is functional. (Red light should appear on the socket)
- ECO-02 device might have stopped temporarily due to an on/off switch. >>> Make sure that the power button is switched to ON mode.

Image 9: The power button is ON

- ECO-02 device is not showing status on the LED panel. >>> Please contact Soapy Care Ltd. support@soapy.care.

9.2 ECO-02 device doesn’t provide water

- Water inlet of the facility is closed. >>> Open the water inlet of the facility. (See "Installation", para. 5)
- Water inlet hose is bent. >>> Correct hose position.
- Water inlet filter is clogged. >>> Clean the filter. (See "Filter maintenance", para. 7.3)

9.3 There is water leaking from the ECO-02 device

- Water inlet hose is not connected properly >>> Make sure that the water inlet is securely fitted and sealed. Attach the water inlet hose to the tap tightly, taking care to seal it well.
- Water drainage system is clogged. >>> Make sure drainage hose is not clogged and fits directly into the drainage of the facility. Make sure the sink strainer is clean and not clogged.

9.4 Water in the sink does not drain properly

- Sink strainer is clogged >>> Clean the sink strainer. (See "Cleaning a sink strainer", para. 7.2)
- Drainage hose is bent >>> Correct hose position.

9.5 ECO-02 device does not provide soap

- Soap bottle might be not installed correctly. >>> Adjust soap bottle. (See "Soap installation", para. 5.6).
- Soap bottle might be empty.>>> Replace the soap bottle. (See "Soap installation", para. 5.6).
- Soap dispense hole at the sprinkler might be clogged.>>> Clean the hole with the provided silicone brush tool. Paragraph

If you cannot eliminate the problem although you follow the instructions in this section, consult the dealer or the Authorized Service Agent. Never try to repair a nonfunctional product yourself.

10 Changing the location or replacing the ECO-02

10.1 Changing the location of the ECO-02

If your business needs require changing the location of the ECO-02 device this paragraph will help you to do so.
10.1.1 Drain the water from the machine and assure there is no leakage from drain output.
10.1.2 Close the water inlet with a special plug.

Perform the reinstallation from the "Installation" part

Image 9: Water inlet plug

10.2 Replacing of the product

1) Unplug the product from the power supply before transporting it.
2) Remove the water drain and water supply connections.

3) Close water supply with a special plug.

Packaging materials are dangerous to children. Keep packaging materials in a safe place away from the reach of children.

Appendix A

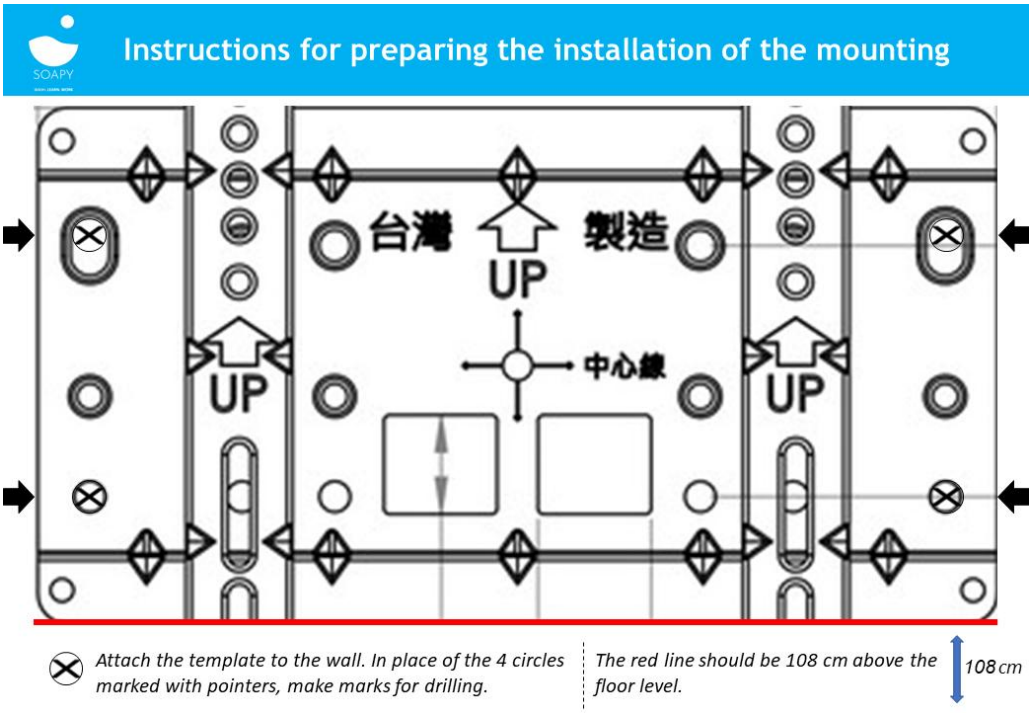

Download the template from here: www.soapy.care/posters and print this template as is on the A4 paper with no shoulders and follow the instructions to prepare 4 holes for the plugs.

Appendix B

The needed tools and equipment for the successful installation of ECO-02.

1. Leveler
2. Open key (Water, screws)
3. Screwdriver, 25 cm length (Head)
4. Hammer, 400 gr
5. Teflon tape
6. Drill machine
7. Scissors/knife for the package opening