Smart Pass Management Module Manual

SN

It can be used with access gates and attendance for communi-ties, office buildings, schools, hotels, scenic spots, transporta-tion hubs and other public service places.

Parameters

Camera	Resolution	2 million pixels
	Type	Binocular wide dynamic camera
	Aperture	F2.4
	Focusing distance	50~150cm
	White balance	auto
	Photo flood light	LED and IR dual photo flood light
Screen	Size	8.0 inch IPS LCD screen
	Resolution	800 × 1280
	Touch	Not supported (optional support)
Processor	CPU	RK3288 quad-core (optional RK3399 six-core, MSM8953 eight-core)
	Storage	EMMC 8G
	Network module	Ethernet and wireless (WIFI)
	Audio	2.5W / 4R speakers
Interface	USB	1 USB OTG, 1 USB HOST standard A port
	Serial communication	1 RS232 serial port
	Relay output	1 door open signal output
	Wiegand	One Wiegand 26/34 output, one Wiegand 26/34 input
	Upgrade button	Support Uboot upgrade button
	Wired network	1 RJ45 Ethernet socket

	Credit card reader	None (optional IC card reader, ID card, ID card)
Function	Face Detection	Supports detection and tracking of multiple people at the same time
	Face library	Up to 30,000
	1: N face recognition	Support
	1: 1 face comparison	Support
	Stranger detection	Support
	Identify distance configuration	Support
	UI interface configuration	Support
	Upgrade remotely	Support
	Interface	Interfaces include device management, personnel / photo management, record query, etc.
	Deployment method	Support public cloud deployment, privatized deployment, LAN use, stand-alone use
Infrared thermal imaging module	Temperature detection	Support
	Temperature detection distance	1 meter (optimal distance 0.5 meter)
	Temperature measurement accuracy	≤ ±0.5℃
	Temperature measurement range	10℃~42℃
	Pixels	32 X 32 dots (total 1024 pixels)
	Visitors' temperature is normal and leased directly	Support
	Abnormal temperature alarm	Support (temperature alarm value can be set)
General parameters	Power	DC12V (±10%)
	Operating temperature	0℃~40℃

General parameters	Storage temperature	-20℃~60℃
	Power consumption	13.5W (Max)
	Installation method	Gate bracket installation
	Size	Standard：274.24*128*21.48 (mm)
		IC card / ID card：296.18*132.88*25 (mm)

Packing list Machine * 1, power adapter * 1, manual * 1, certificate of conformity * 1

Installation Notes

1.Module structure description

Optional credit card (ID) version, size: 296.18*132.88*25 (mm)

2、Port description

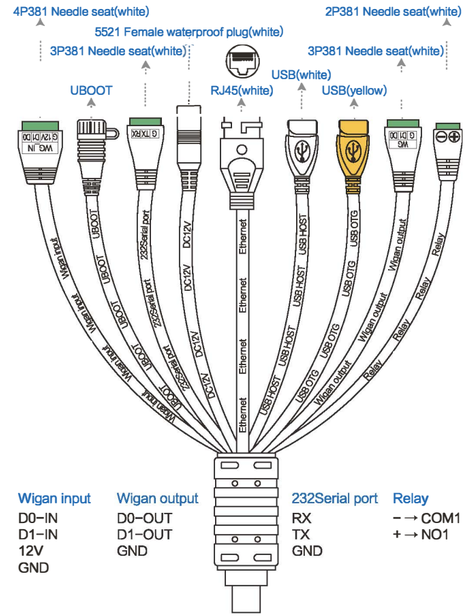

3、Installation method (installed with SV-1081D)

① According to the requirements of the installation site, open a 35mm diameter hole (as shown in the figure below) in the space position of the gate (usually the middle or front side).

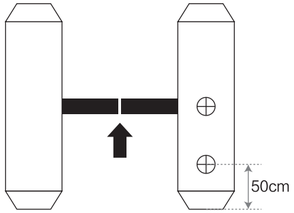

Single channel gate

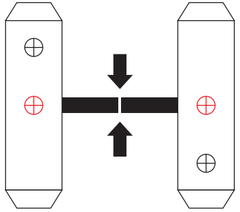

Dual-channel gate

Note: The position of the opening should be based on the actual gate type and scene, and 35mm is for reference only.

② Unscrew the nut at the bottom of the gate head post, thread the cable out of the nut, and remove the nut.

③ Under the gate, insert the cable and cable interface into the gasket and nut in turn, tighten the nut, connect the power supply, and the screen will start.

Note: The brackets in the figure above are for installation reference only, non-standard accessories.

FCC Statement

Federal Communication Commission Interference Statement

This equipment has been tested and found to comply with the limits for a Class B digital device, pursuant to Part 15 of the FCC Rules. These limits are designed to provide reasonable protection against harmful interference in a residential installation. This equipment generates, uses, and can radiate radio frequency energy and, if not installed and used in accordance with the instructions, may cause harmful interference to radio communications. However, there is no guarantee that interference will not occur in a particular installation. If this equipment does cause harmful interference to radio or television reception, which can be determined by turning the equipment off and on, the user is encouraged to try to correct the interference by one or more of the following measures:

- Reorient or relocate the receiving antenna.
- Increase the separation between the equipment and receiver.
- Connect the equipment into an outlet on a circuit different from that to which the receiver is connected.
- Consult the dealer or an experienced radio/TV technician for help.

FCC Caution:

This device complies with Part 15 of the FCC Rules. Operation is subject to the following two conditions: (1) This device may not cause harmful interference, and (2) this device must accept any interference received, including interference that may cause undesired operation.

Non-modification Statement:

Changes or modifications not expressly approved by the party responsible for compliance could void the user's authority to operate the equipment.

Radiation Exposure Statement

This equipment complies with FCC radiation exposure limits set forth for an uncontrolled environment. This equipment should be installed and operated with minimum distance 20cm between the radiator and your body.

Care and Maintenance

1.During the installation and use of the product, all electrical safety regulations must be strictly observed.

2.Please use the power adapter provided by the regular manufacturer. For specific requirements of the power adapter, see the product parameter table.

3.When installing on the gate, please make sure that the product is installed firmly.

4.If the product does not work properly, please contact the after-sales service personnel. Do not disassemble or modify the product in any way. (The company does not assume any responsibility for problems caused by unauthorized modification or repair.

5.Do not immerse the product in water. When the product is installed outdoors, try to use it with the rain cover provided by our company.

6.Please understand that you are responsible for properly configuring all passwords and other related product security settings, and keeping your username and password properly.

7.If the equipment does not work properly, please do not disassemble it for repair, otherwise it will affect the equipment warranty.

8.Avoid extreme or extreme environments such as extreme high temperature (or low temperature), high humidity, vibration, radiation, and chemical corrosion during installation and use.

Warranty Card

Dear customer, thank you for purchasing the Face Recognition Pass Management Module. In order to better serve you, please read, fill in and properly keep the warranty card after purchasing the product.

Your name	
Contact person	
Telephone	
Address	
Date of purchase	
Serial number	
Maintenance records	
Cause of issue	

Warranty description:

1. This warranty card is required to be properly kept by the user as a proof of repair.
2. This product is guaranteed for one year from the date of purchase.
3. Warranty Equipment During the warranty period, under normal use and maintenance conditions, the machine itself malfunctions. Upon inspection, the company will provide free repair and parts replacement.
4. During the warranty period, if the following events occur, the company has the right to refuse service or charge materials and maintenance service fees as appropriate.

1) This warranty card and valid proof of purchase cannot be provided.
2) Product failure and damage caused by improper user use.
3) Damage due to abnormal external forces.
4) It is not our maintenance service, and the user dismantles it to cause damage.
5) Failures and damage caused by natural disasters or other force majeure factors.
6) Others intentionally damaged.

5. The company reserves the right to modify and interpret all content.