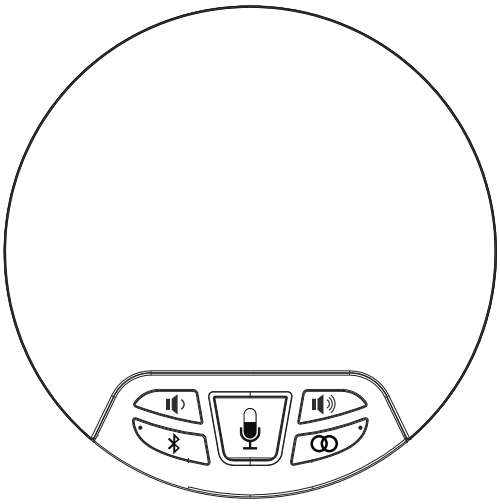

Speakerphone

User Manual

Product Description

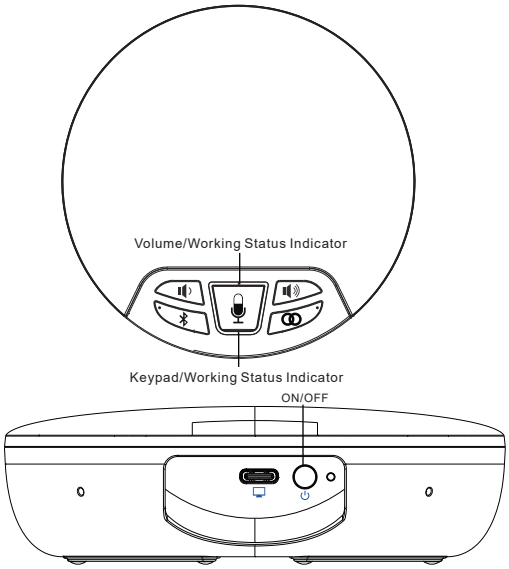

Package List

1. Speakerphone

2.USB Cable

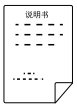

3. User Manual

Buttons/Indicator Description

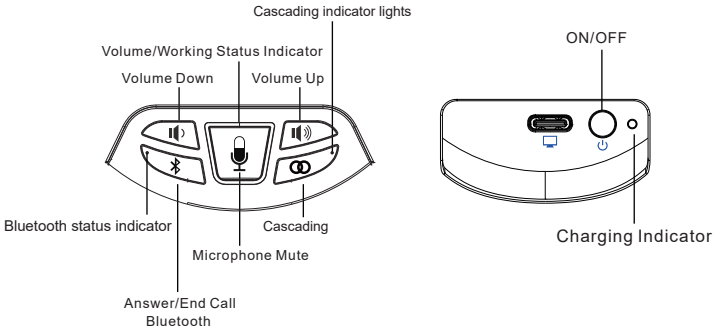

	Speaker up/down button	Increases/decreases speaker volume
	Cascading button	Long press to active the cascading mode, exchange the speakerphone into slave mode.
	Answer/end calls button and Bluetooth button	Short press to answer/end calling; long press to turn on/off the Bluetooth function
	Microphone mute button	Mutes/unmutes microphone
	Device on/off button	Long press buttons in 3 seconds to turn on/off the device
Microphone status indicator	Circular indicator: the white light is always on during normal operation; when the microphone is muted, the red light is always on; when the speaker and microphone are muted at the same time the red and white light flash.	
Speaker volume status indicator	The circular indicator light changes as the speaker volume increases and decreases	
Charging / battery status indicator	When the battery is charging, the indicator turns green; when the battery is full, the indicator turns off; when the battery is low, the indicator turns red	
Bluetooth indicator	When Bluetooth is pairing, the blue light is flashing; When the Bluetooth is paired, the blue light is always on	
Cascading indicator	In the cascade connection status, the orange light is always on	

Interface Specification

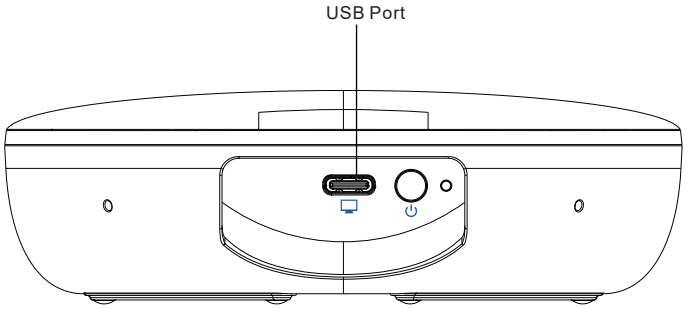

Operating Instructions

1.Bluetooth connection instructions: Long press the " ᛒ" button, the indicator blue light flashes, enter the Bluetooth pairing mode; turn on the Bluetooth function of the mobile phone, search for the corresponding Bluetooth name for pairing, the blue light is always on after the pairing is successful; long press the " ᛒ " button again to turn off the Bluetooth function(when connecting with a Bluetooth adapter, please check the Bluetooth adapter instructions.)

2.Instructions for turn on and off: Press and hold the "⏻"button for 3 seconds to turn on the speakerphone master, and press the "⏻" button again for 3 seconds to turn off the speakerphone master; In addition, when the USB is connected to a computer device, the speakerphone master will automatically turn on. When the speakerphone master is not connected to any devices, the speakerphone master will shut down after 3 minutes.

Attentions

This manual introduces the functions, installations and operations for this device in details. Please read this manual carefully before installation and use.

1.To prevent damage to this product or any product connected to it, this product can only be used within the specified range.

.Do not expose the product to rain or moisture.

.To prevent the risk of electric shock, do not open the case. Installation and maintenance should only be carried out by qualified technicians.

.Do not use the product beyond the specified temperature, humidity or power supply specifications.

2.Electrical Safety. Installation and use of this product must strictly comply with local electrical safety standards.

3.Avoid damage to the product caused by heavy pressure, strong vibration or immersion during transportation, storage and installation.

4.Install with Caution.

.Housing of this product is made of organic materials. Do not expose it to any liquid, gas or solids which may corrode the shell,do not power on before completing installation.

5.Do not Disassemble the Product without Permission. This product contains no parts which can be maintained by the users themselves. Any damage caused by dismantling the product by the user without permission is not covered by warranty.

Reminder: When using the device for the first time or if it has not been used for a long time, it is recommended to charge it for at least one hour to ensure sufficient power.

Warranty

Terms of warranty

Repair of defects in materials and workmanship will be free of charge to retail customers purchasing a conferencing system, subject to or excluded from the terms listed below.

Warranty period

The warranty period is from the date of sale. During the warranty period, if the following conditions are found, the warranty will be void: the product is not stored or used in a reasonable manner or as recommended in the user manual, and is damaged or modified by any modification kits, components, or accessories not sold by the company , modification or use of this product by an agent not authorized by this company to repair defects or malfunctions covered by the warranty;

Warranty content

This warranty applies to the conference system and all standard accessories, but does not include paper items such as storage card packaging and manuals.

User-Generated Data

This warranty does not apply to loss or damage to user-generated data that may be stored in your product (including, but not limited to, product numbers, addresses).

Process for Obtaining Warranty Service

If the product purchased by the customer requires warranty, the customer can mail the device and the customer's proof of purchase (such as a copy of the sales invoice) to your equipment dealer. Before mailing the goods, we recommend that the customer back up the data in case of any trouble like lost or damaged during the repair process.

Connection Diagram

1.Cascading connection description: The default of speakerphone is master mode. When the meeting requires two devices to be cascaded, firstly, press the cascading button of one of the speakerphones to switch to slave mode, and two devices can be wirelessly cascaded. The master can be connected to the conference terminal device.

2.If the operation is not connected successfully according to the above method, please follow the following manual method: long press the cascading button of one of the two speakerphone, switch it into the slave mode. When the white light of the slave speakerphone turns off, long press the microphone mute button of the two speakerphones at the same time. the cascading button of two speakerphone will appear orange lights at the same time, then need to press the cascading buttons of the two speakerphones again within 3 seconds, the cascading will be set successfully. (If the cascading buttons of the two speakerphones is not pressed at the same time, after 3 seconds, the orange lights of the cascading indicators will off and above operation should be implemented again).

Note: 1) During the cascade marching status, it will cancel the matching operation, once having a short press of the cascading button. 2)The speakerphones that have been cascaded successfully have the c-ascade pairing memory function. It will automatically cascade next time, after switching into the slave mode.

1：Mobile Bluetooth connection

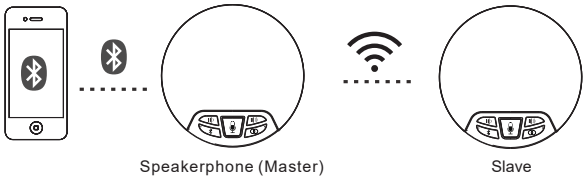

2：USB Connection

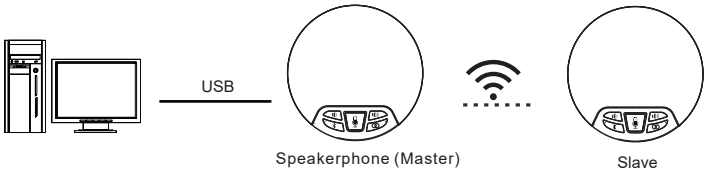

Notice for the wireless cascading: in the same space/scenario, if you need the second group of GLS200W to cascade, the first group of GLS200W should be turned off or placed more than 10 meters away from the second group. When the second group are cascaded, the first group can be turned on or used close to the second group.

FCC Caution:

This device complies with part 15 of the FCC Rules. Operation is subject to the following two conditions: (1) this device may not cause harmful interference, and (2) this device must accept any interference received, including interference that may cause undesired operation. Any changes or modifications not expressly approved by the party responsible for compliance could void the user's authority to operate the equipment.

NOTE: This equipment has been tested and found to comply with the limits for a Class B digital device, pursuant to Part 15 of the FCC Rules. These limits are designed to provide reasonable protection against harmful interference in a residential installation. This equipment generates, uses and can radiate radio frequency energy and, if not installed and used in accordance with the instructions, may cause harmful interference to radio communications. However, there is no guarantee that interference will not occur in a particular installation.

If this equipment does cause harmful interference to radio or television reception,which can be determined by turning the equipment off and on, the user is encouraged to try to correct the interference by one or more of the following measures:

-- Reorient or relocate the receiving antenna.

-- Increase the separation between the equipment and receiver.

-- Connect the equipment into an outlet on a circuit different from that to which the receiver is connected.

-- Consult the dealer or an experienced radio/TV technician for help.

To maintain compliance with FCC's RF Exposure guidelines, This equipment should be installed and operated with minimum distance between 20cm the radiator your body: Use only the supplied antenna.